'95~'98

PARTS CATALOG

P4109

DIESEL ENGINE
4JB1

ISUZU
GENUINE PARTS

PART NO. 5-8871-0796-0

FIGURE NUMBER INDEX

FIGURE NUMBER INDEX

FIG NO.	TITLE (SUBTITLE)	PAGE
005	ENGINE GASKET KIT	2
010	CYLINDER HEAD COVER	6
011	CYLINDER HEAD	10
012	CYLINDER BLOCK	16
013	OIL PAN AND LEVEL GAUGE	26
014	CAMSHAFT AND VALVE	40
015	CRANKSHAFT, PISTON AND FLYWHEEL	48
020	TIMING GEAR CASE AND FLYWHEEL HOUSING	56
022	ENGINE MOUNTING	74
025	INLET MANIFOLD	78
027	EXHAUST MANIFOLD	86
028	VENTILATION SYSTEM	92
030	WATER PUMP AND CORROSION RESISTOR	96
031	THERMOSTAT AND HOUSING	102
032	WATER PIPING; ENGINE	108
033	FAN AND FAN BELT	114
035	ENGINE CONTROL VALVE AND LEVER	120
036	TURBOCHARGER SYSTEM	124
037	TURBOCHARGER	128
040	FUEL INJECTION SYSTEM	130
041	FUEL FILTER AND BRACKET	144
042	FUEL PUMP AND PIPE	150
050	OIL COOLER AND OIL FILTER	154
051	OIL PUMP AND OIL STRAINER	160
052	OIL AND VACUUM PIPING; ENGINE	164
060	ENGINE ELECTRICAL CONTROL PARTS	172
061	BATTERY AND BATTERY CABLE	186
065	STARTER	190
066	GENERATOR	204
080	INJECTION PUMP	220
081	GOVERNOR; INJECTION PUMP	234
084	FEED PUMP; INJECTION PUMP	252
085	AUTO TIMER; INJECTION PUMP	258
086	MISCELLANEOUS PARTS; INJECTION PUMP	262

F I G U R E N U M B E R I N D E X

FIG NO.	TITLE (SUBTITLE)	PAGE
087	COUPLING; INJECTION PUMP	268
101	ACCELERATOR PEDAL AND CONTROL	272
110	RADIATOR	276
111	RADIATOR HOSE AND SUB TANK	280
130	AIR CLEANER	284
131	AIR DUCT	290
141	FUEL PIPING; CHASSIS	294
145	WATER SEDIMENTER; FUEL	298
150	EXHAUST PIPE AND SILENCER	302
201	CLUTCH	306
205	CLUTCH PIPING	310
206	CLUTCH SLAVE CYLINDER	312
220	MANUAL TRANSMISSION ASM AND CASE	314
225	SPEEDOMETER DRIVEN GEAR	320
226	MANUAL TRANSMISSION GEAR	322
230	GEAR SHIFTER AND QUADRANT BOX	330
308	PARKING BRAKE	336
311	PARKING BRAKE CONTROL	340
810	WIRING HARNESS AND FUSE	344
815	FIXING PARTS; WIRING HARNESS	346
821	METER ASM	350
825	SWITCH AND RELAY; INSTRUMENT PANEL	354
826	ELECTRICAL CONTROL AND OTHER PARTS	358
850	AIR CONDITIONING SYSTEM; FRONT	362

ILLUSTRATION INDEX

0-05 ENGINE GASKET KIT

FIG-NO.

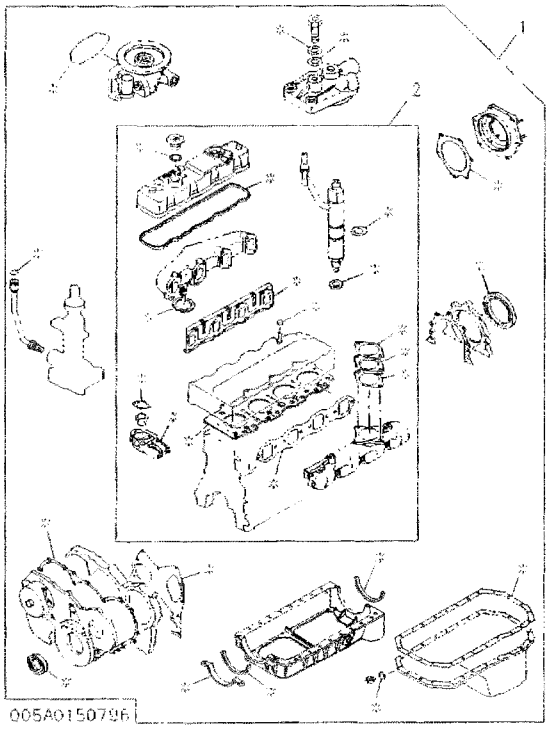

P-2

0-10 CYLINDER HEAD COVER

FIG-NO.

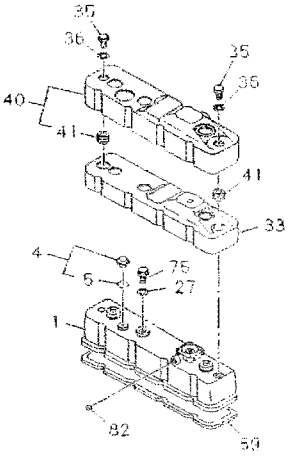

P-6

0-11 CYLINDER HEAD

FIG-NO.

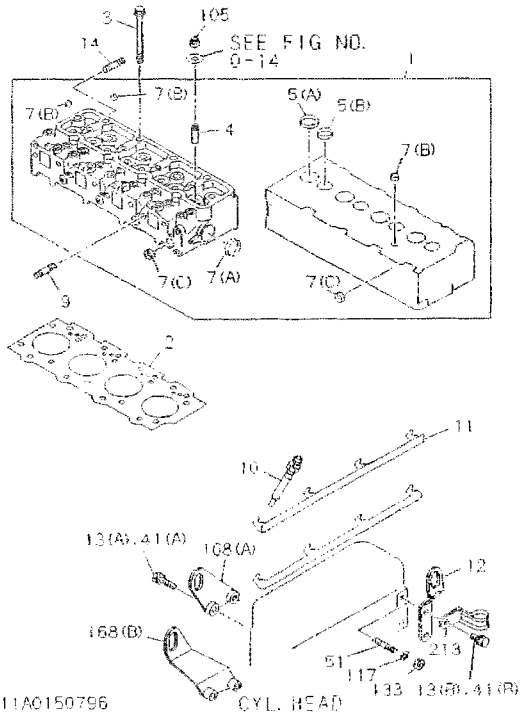

P-10

0-12 CYLINDER BLOCK

FIG-NO.

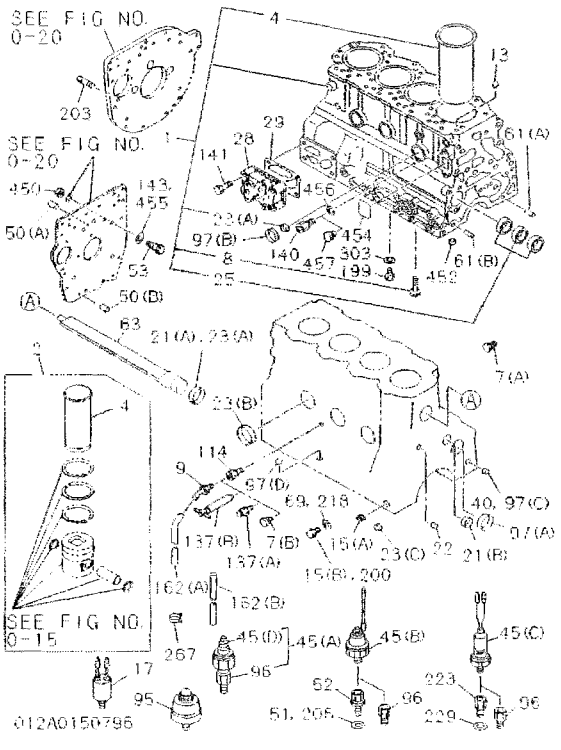

P-16

ILLUSTRATION INDEX

0-13	OIL PAN AND LEVEL GAUGE
FIG-NO.	(NO. 1)

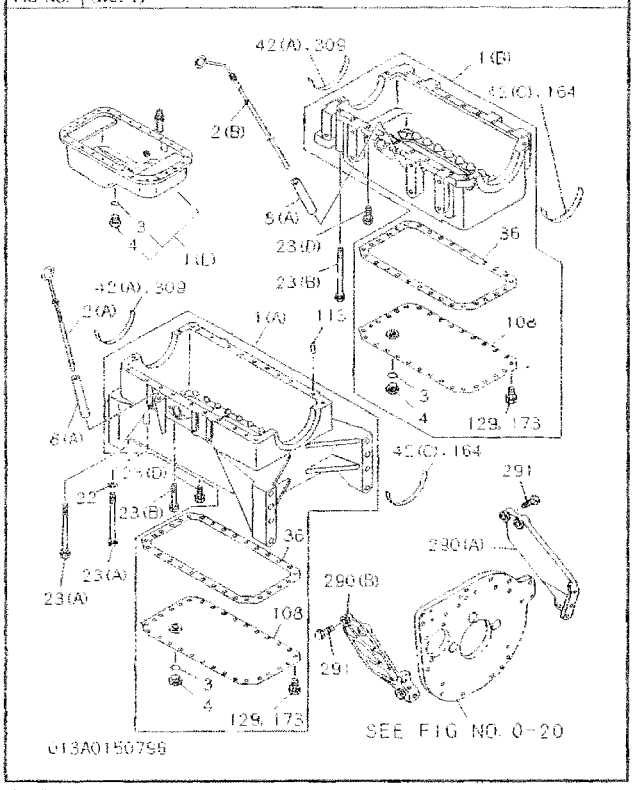

P-26

OIL PAN AND LEVEL GAUGE	0-13
(NO. 2)	FIG-NO.

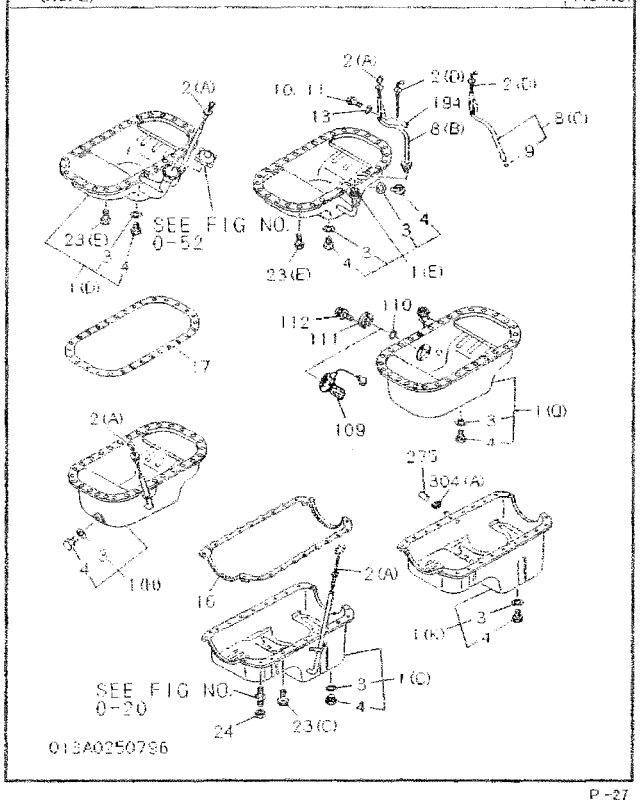

P-27

0-13	OIL PAN AND LEVEL GAUGE
FIG-NO.	(NO. 3)

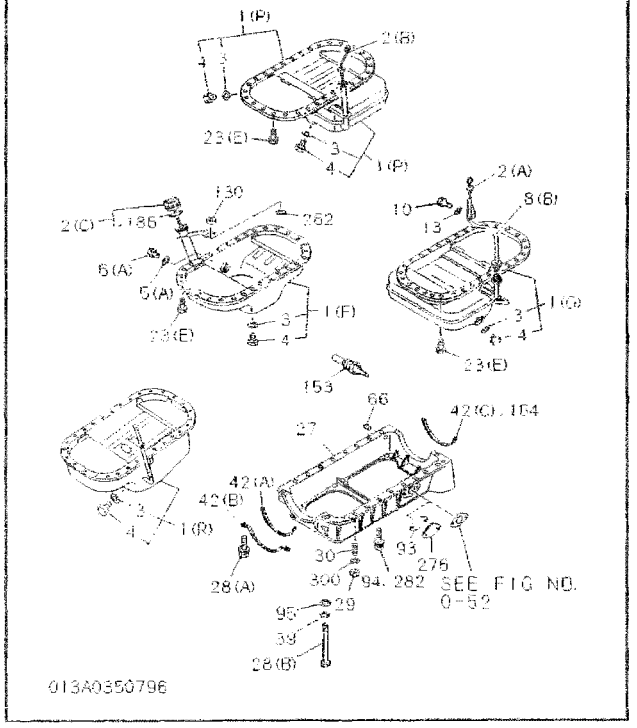

P-28

OIL PAN AND LEVEL GAUGE	0-13
(NO. 4)	FIG-NO

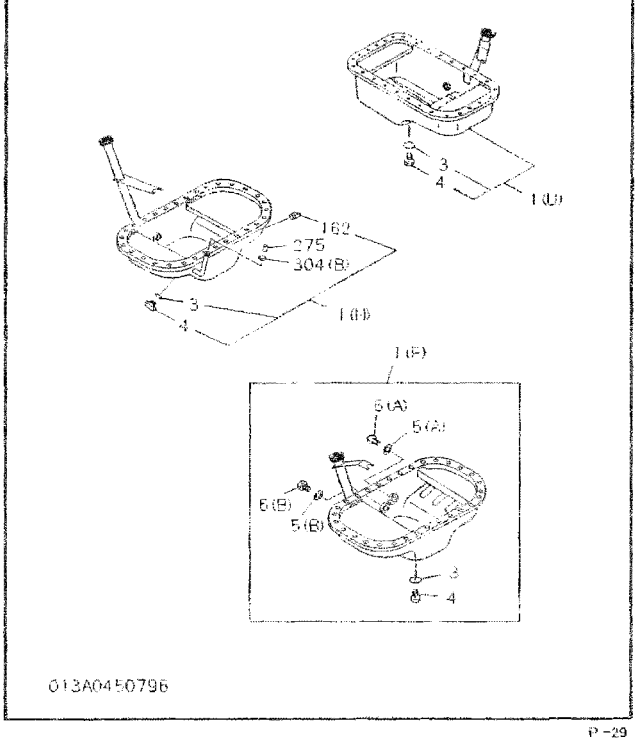

P-29

ILLUSTRATION INDEX

0-14	CAMSHAFT AND VALVE
FIG-NO.	(NO. 1)

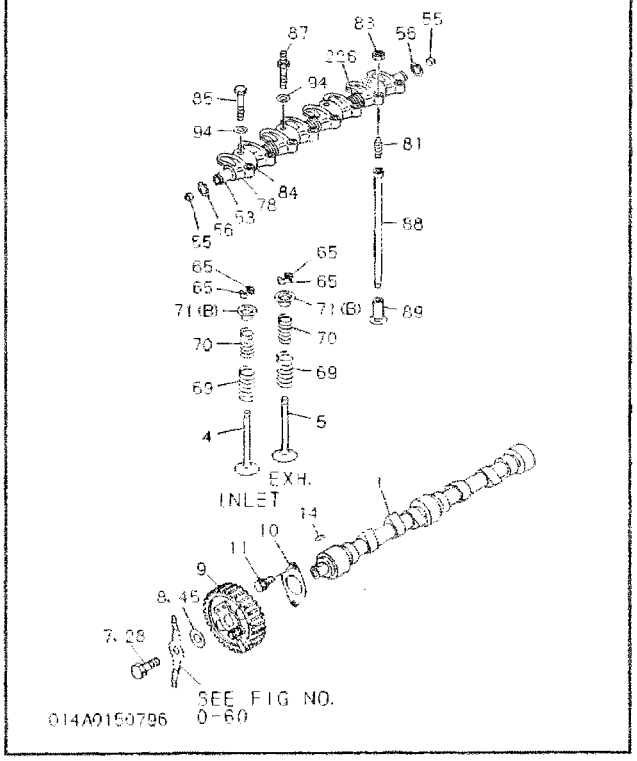

P-40

CAMSHAFT AND VALVE	0-14
(NO. 2)	FIG-NO.

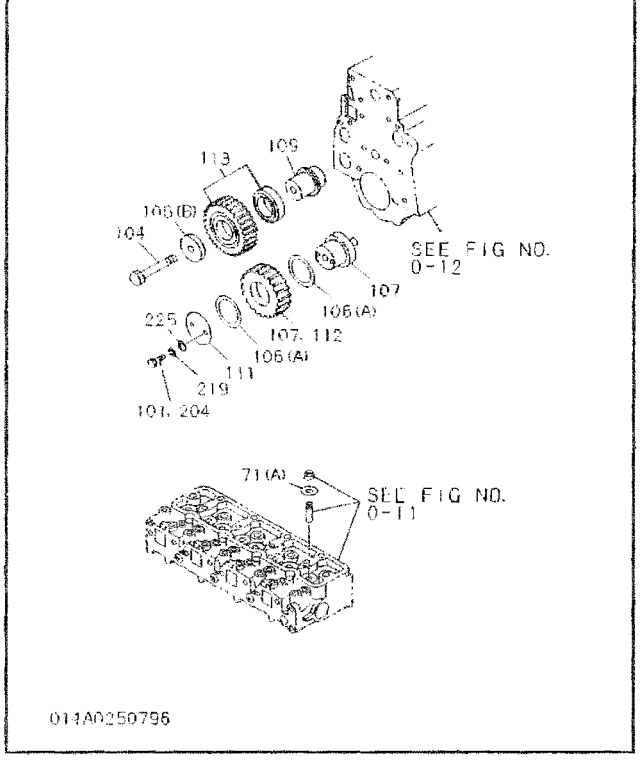

P-41

0-15	CRANKSHAFT, PISTON AND FLYWHEEL
FIG-NO	(NO. 1)

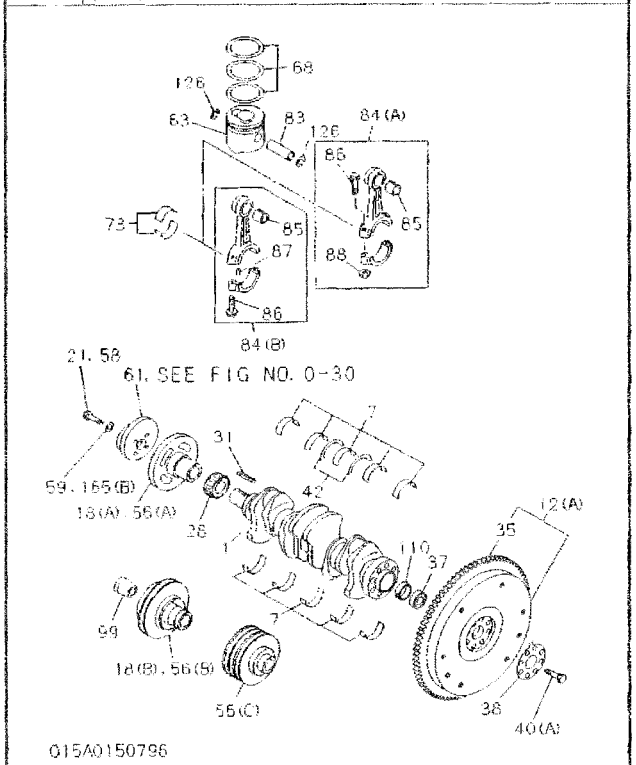

P-48

CRANKSHAFT, PISTON AND FLYWHEEL	0-15
(NO. 2)	FIG-NO.

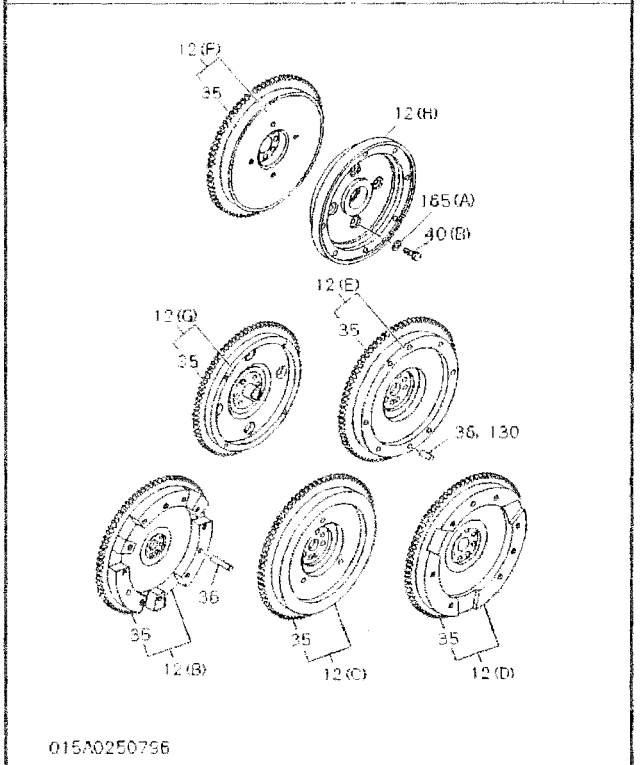

P-49

ILLUSTRATION INDEX

0-20 FIG-NO.	TIMING GEAR CASE AND FLYWHEEL HOUSING (NO. 1)

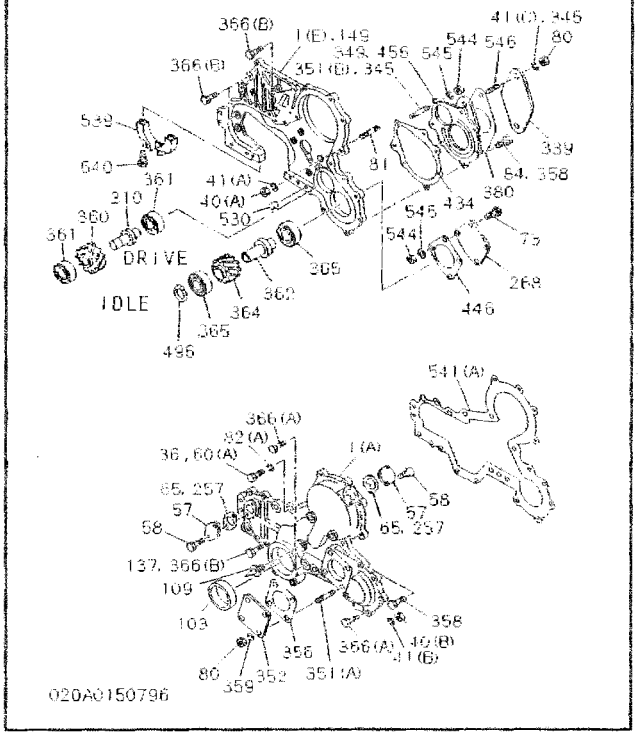

P-56

TIMING GEAR CASE AND FLYWHEEL HOUSING (NO. 2)	0-20 FIG-NO.

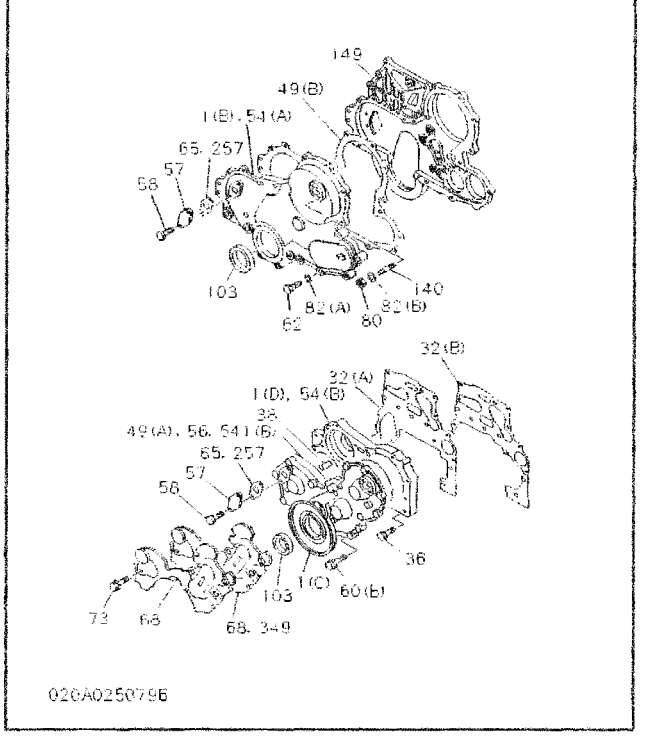

P-57

0-20 FIG-NO.	TIMING GEAR CASE AND FLYWHEEL HOUSING (NO. 3)

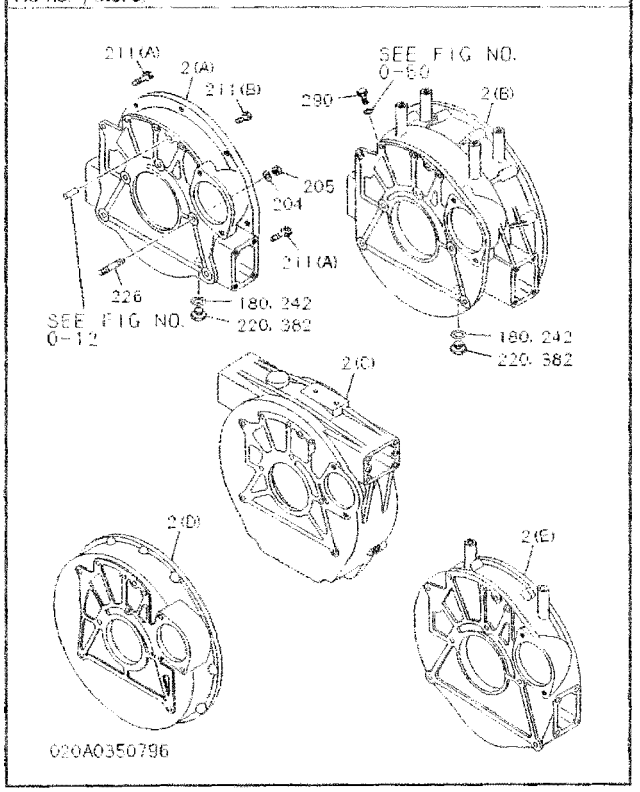

P-58

TIMING GEAR CASE AND FLYWHEEL HOUSING (NO. 4)	0-20 FIG-NO.

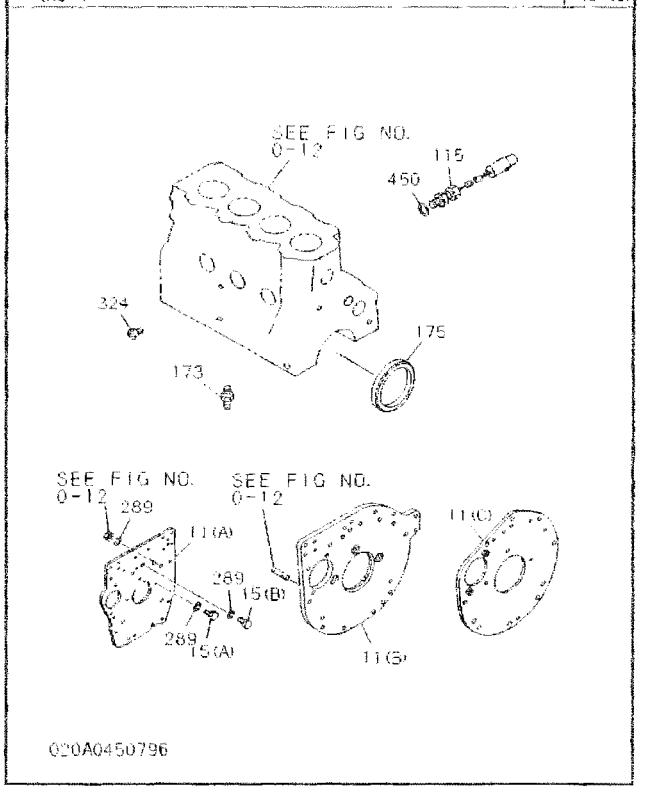

P-59

ILLUSTRATION INDEX

0-22	ENGINE MOUNTING
FIG-NO.	

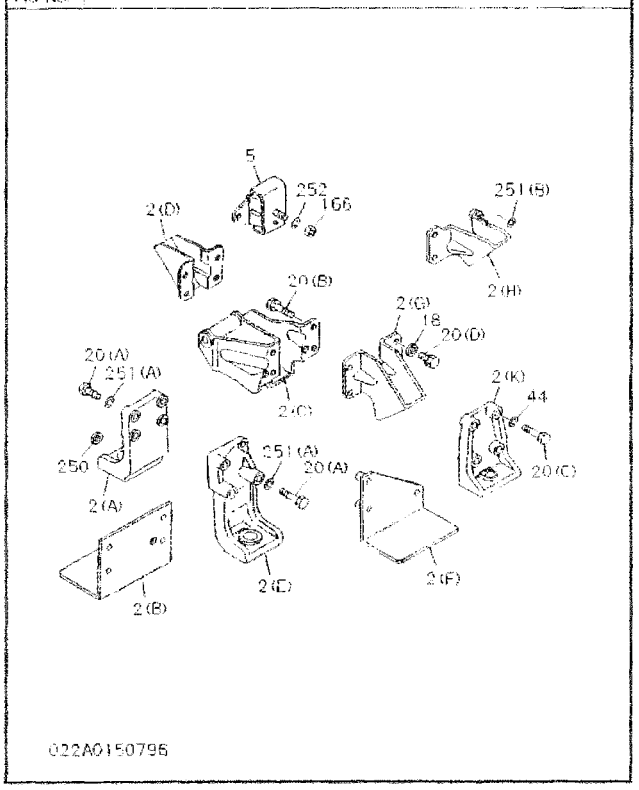

P-74

0-25	INLET MANIFOLD
FIG-NO.	(NO. 1)

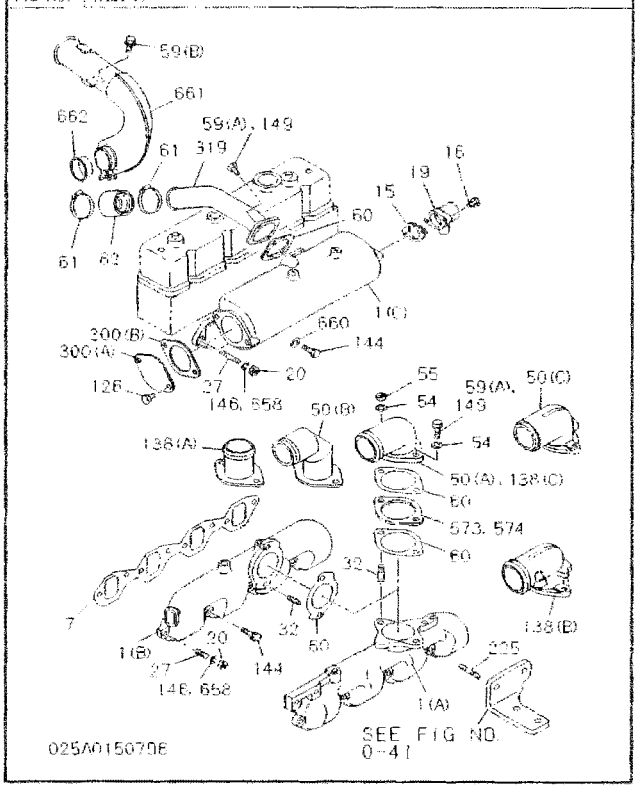

P-78

INLET MANIFOLD	0-25
(NO. 2)	FIG-NO.

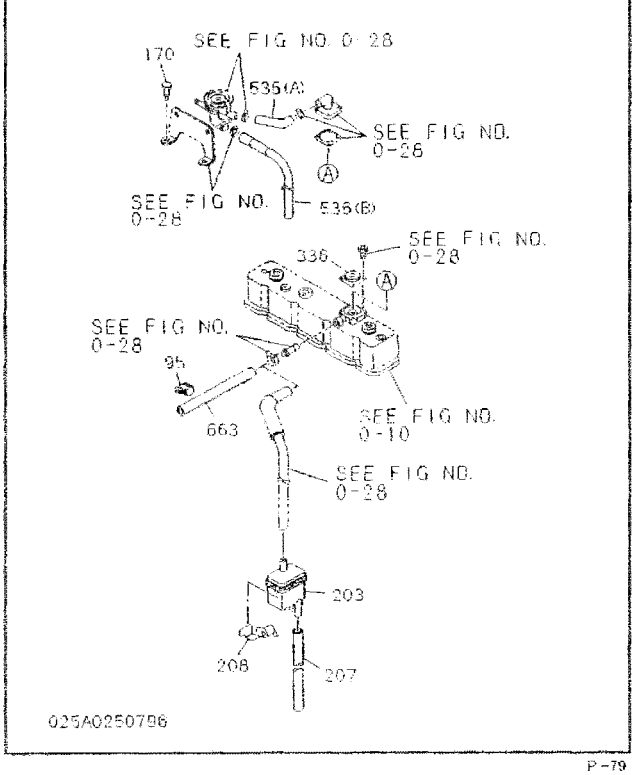

P-79

0-27	EXHAUST MANIFOLD
FIG-NO.	

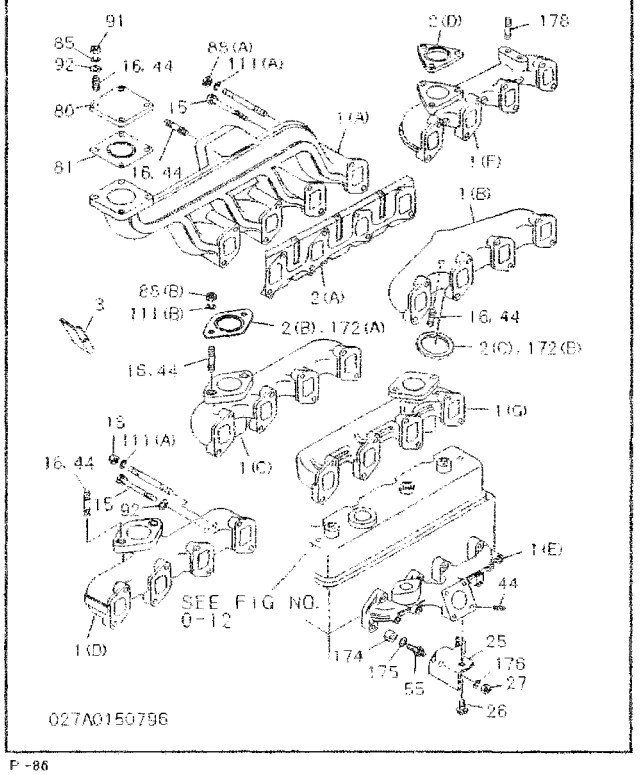

P-86

ILLUSTRATION INDEX

0-28	VENTILATION SYSTEM
FIG-NO.	

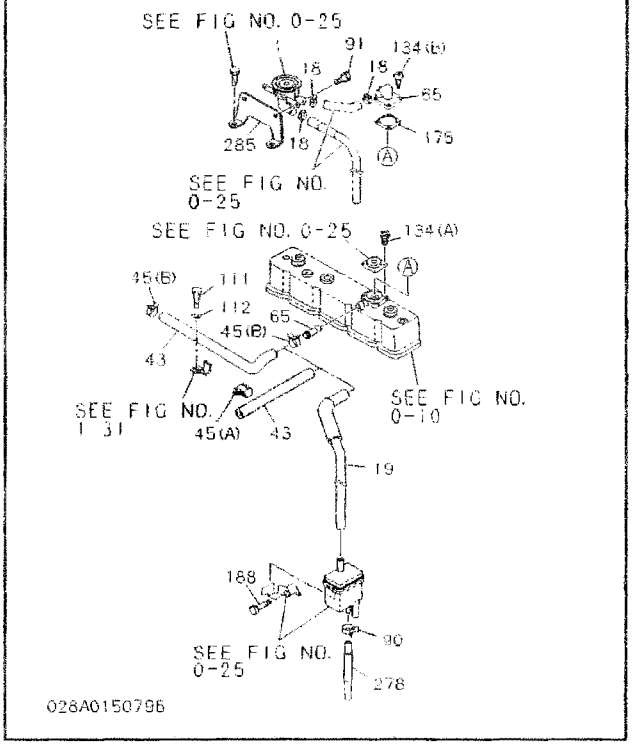

0-30	WATER PUMP AND CORROSION RESISTOR
FIG-NO.	

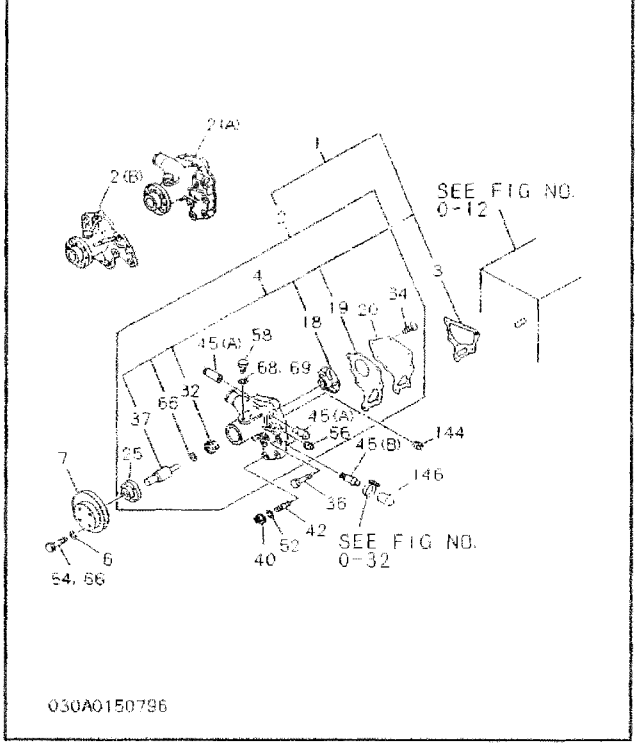

0-31	THERMOSTAT AND HOUSING
FIG-NO.	

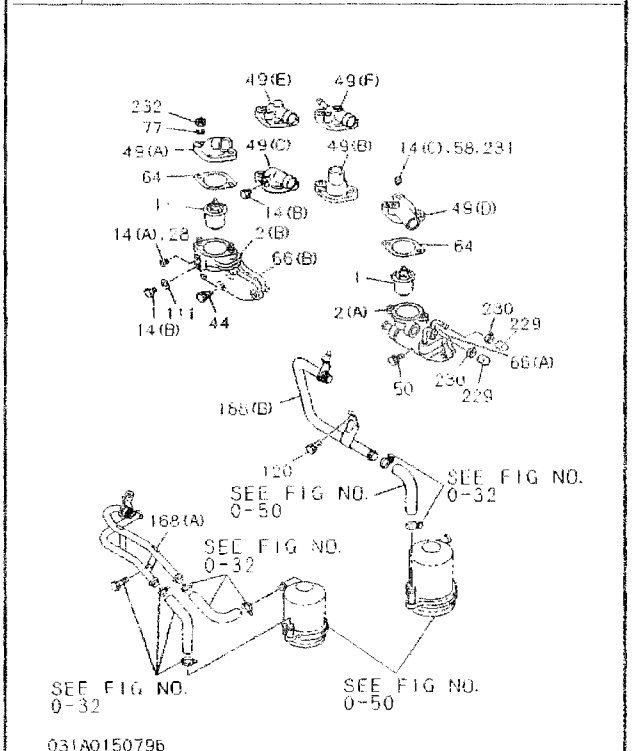

0-32	WATER PIPING; ENGINE
FIG-NO.	

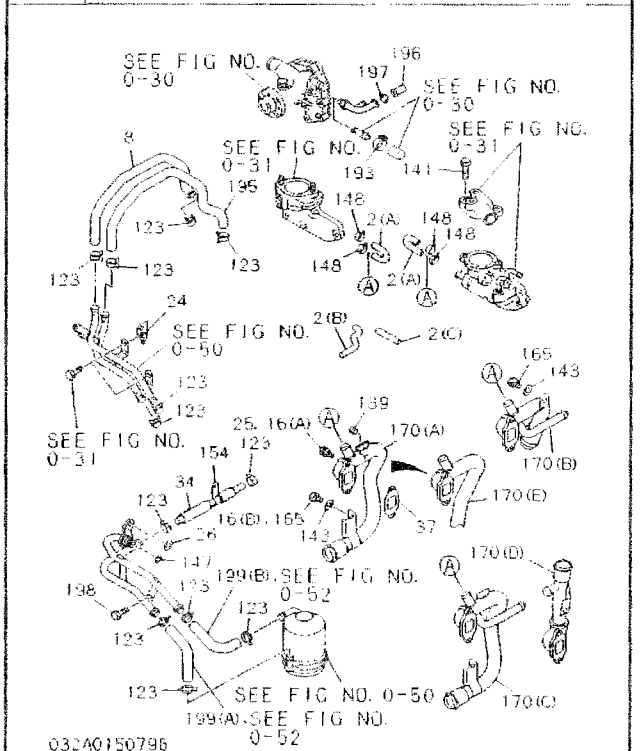

ILLUSTRATION INDEX

0-33	FAN AND FAN BELT
FIG-NO.	

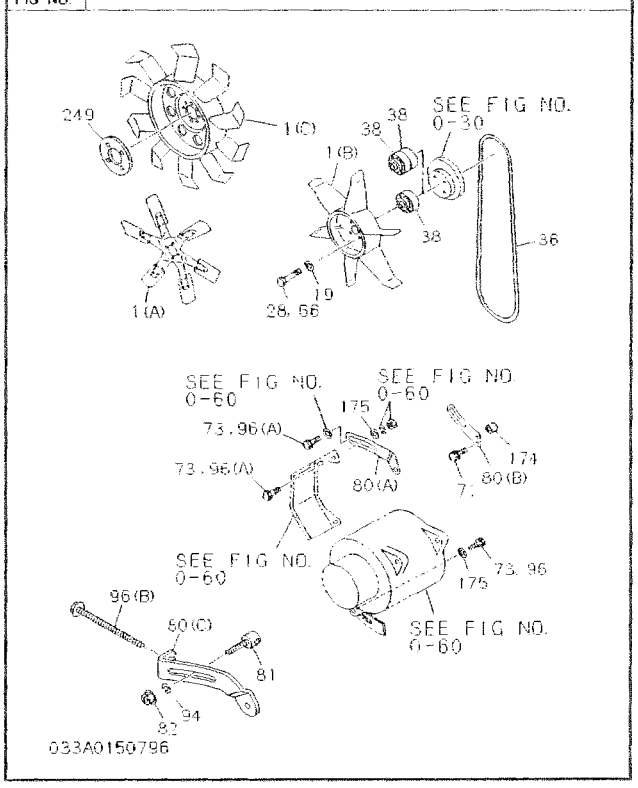

P-114

0-35	ENGINE CONTROL VALVE AND LEVER
FIG-NO.	

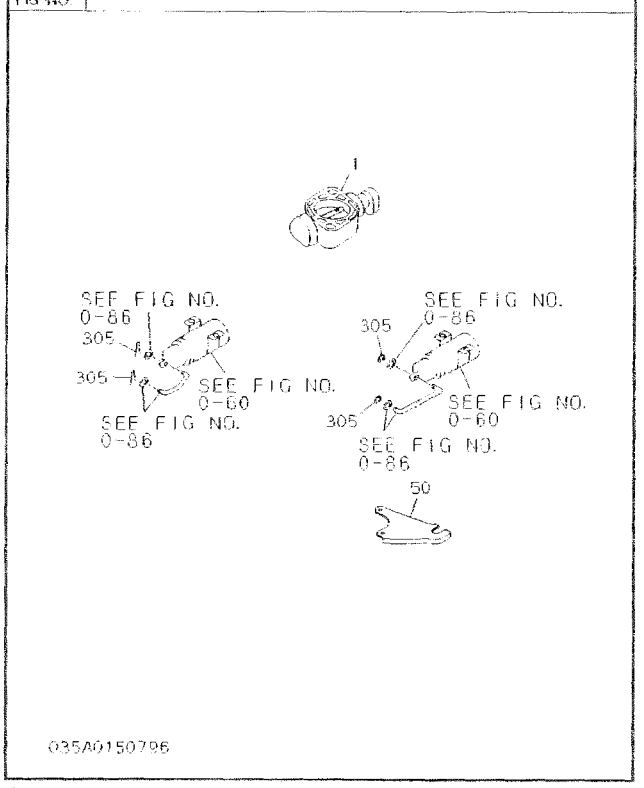

P-120

0-36	TURBOCHARGER SYSTEM
FIG-NO.	

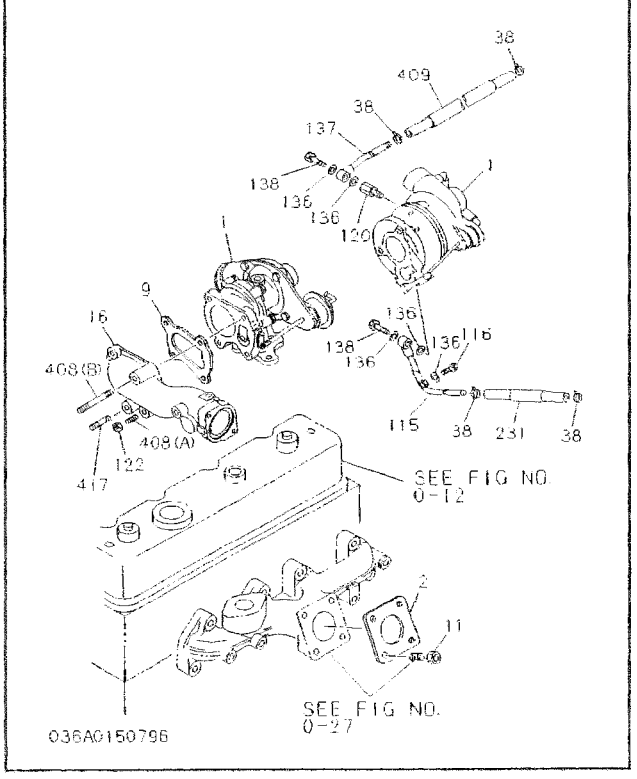

P-124

0-37	TURBOCHARGER
FIG-NO.	

ASM
8-94343-292-*
8-97017-777-*

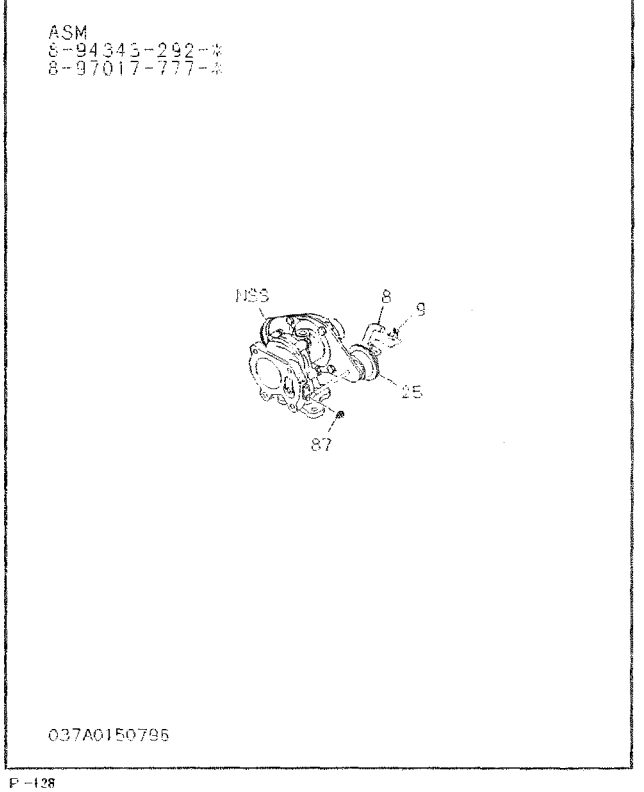

P-128

ILLUSTRATION INDEX

0-40	FUEL INJECTION SYSTEM
FIG-NO.	(NO. 1)

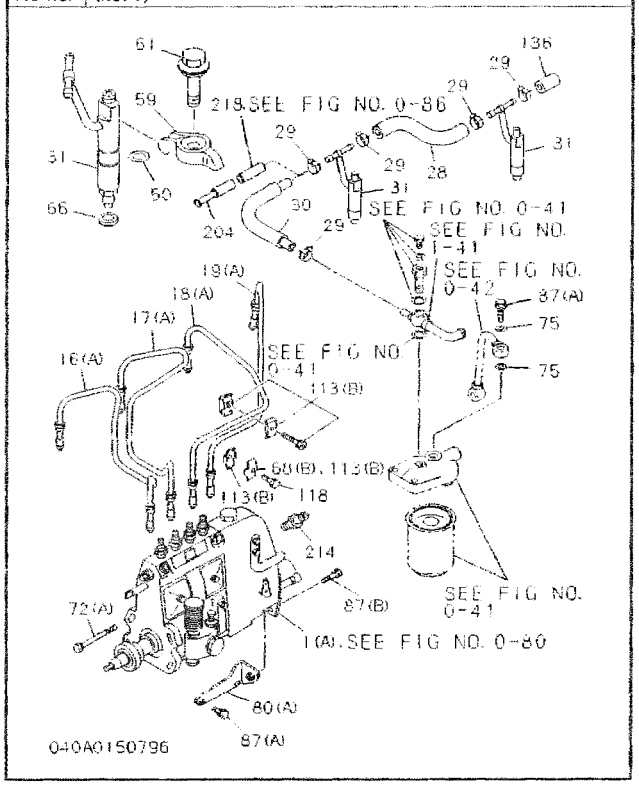

P-130

FUEL INJECTION SYSTEM	0-40
(NO. 2)	FIG-NO.

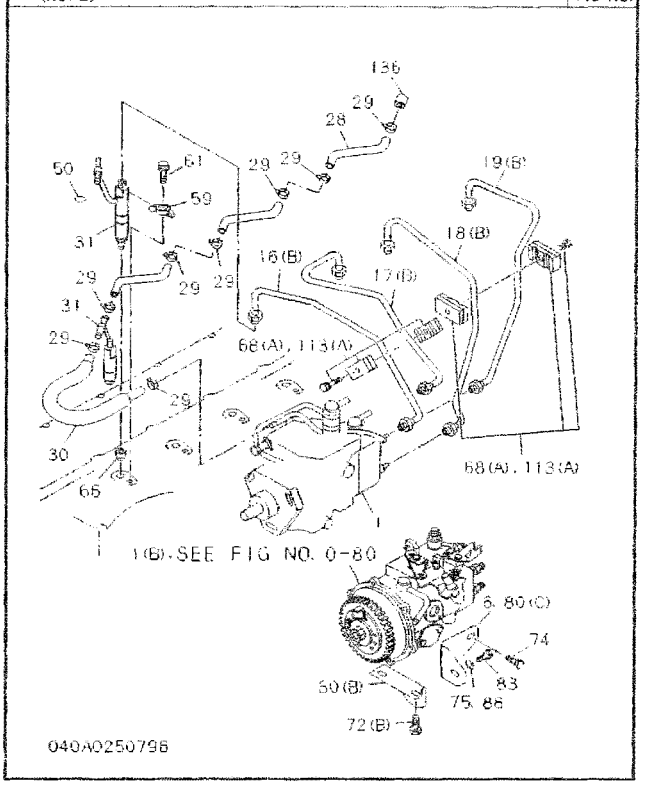

P-131

0-40	FUEL INJECTION SYSTEM
FIG NO.	(NO. 3)

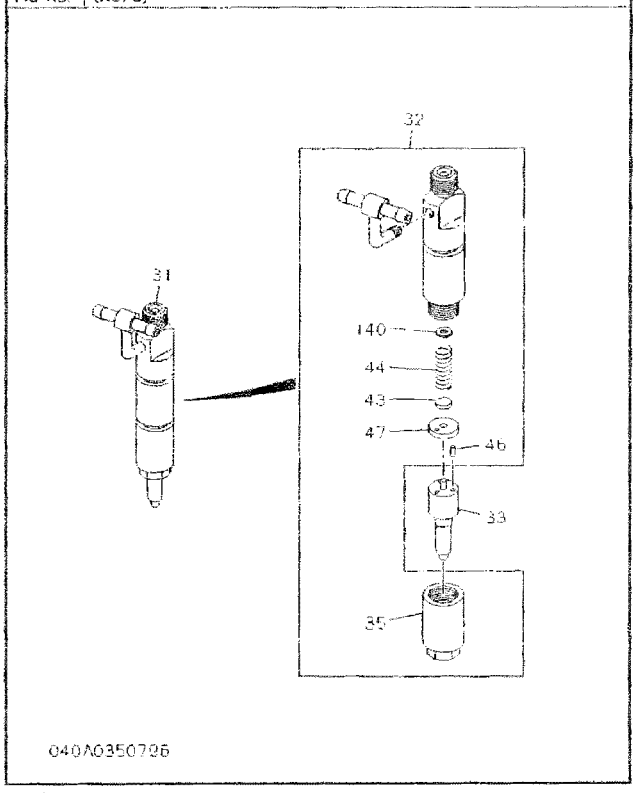

P-132

0-41	FUEL FILTER AND BRACKET
FIG-NO.	(NO. 1)

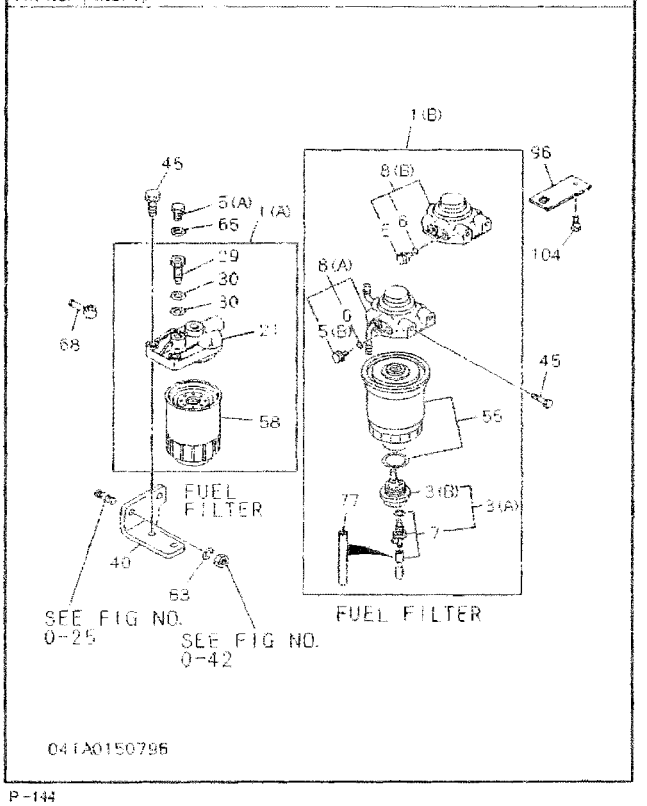

P-144

ILLUSTRATION INDEX

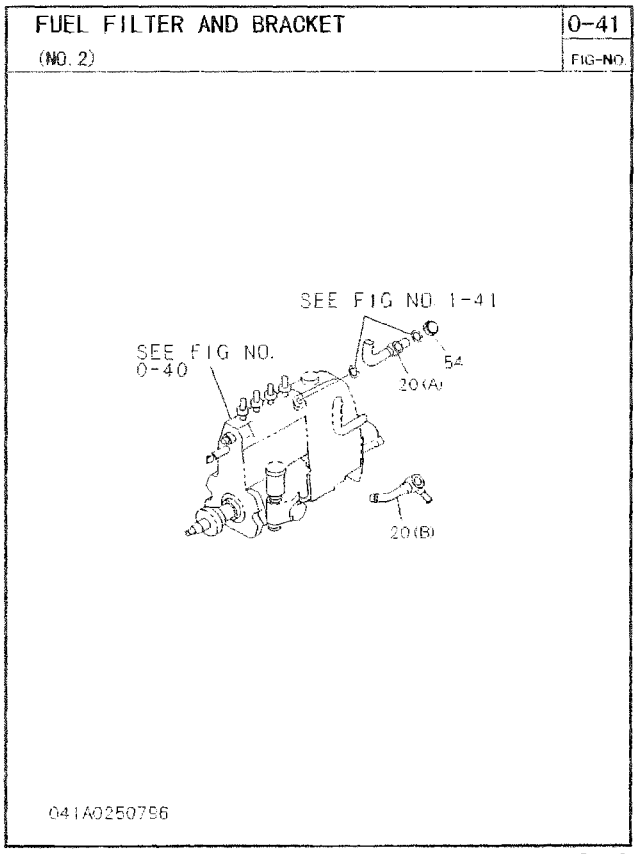

P -145

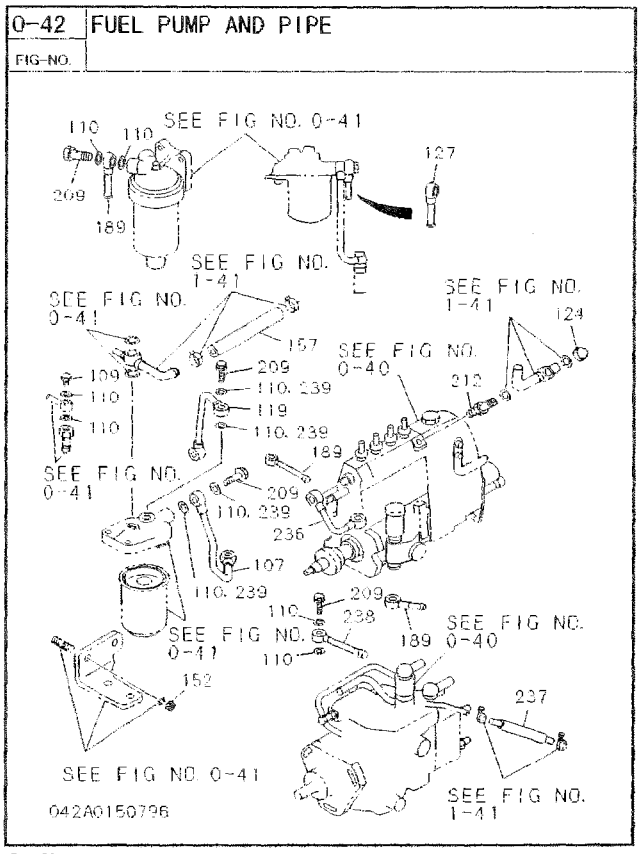

P -150

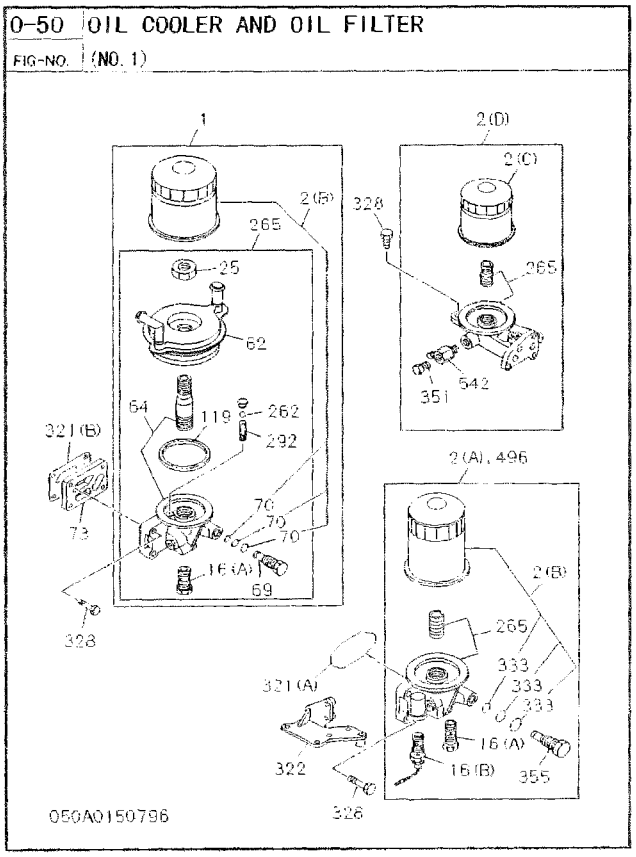

P -154

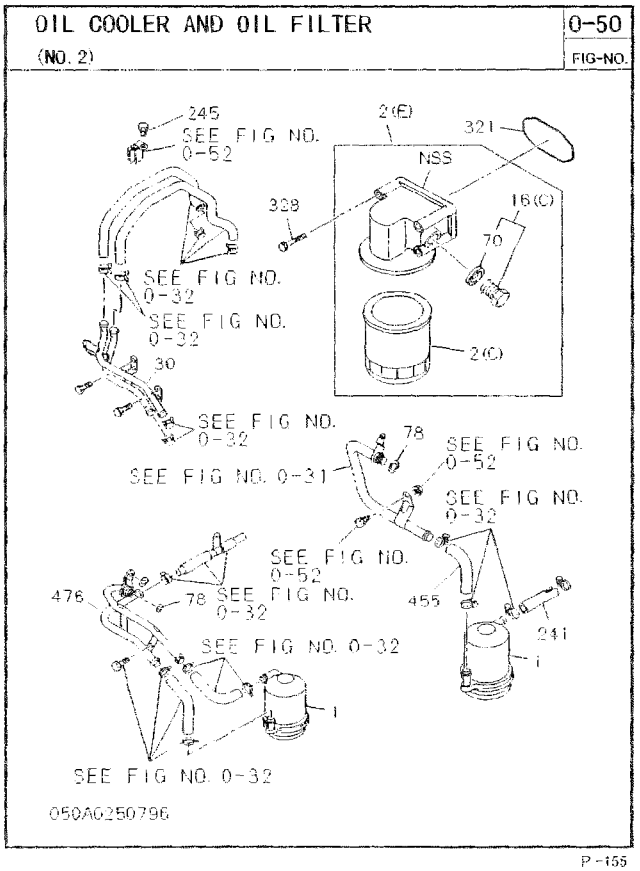

P -155

ILLUSTRATION INDEX

0-51	OIL PUMP AND OIL STRAINER
FIG-NO.	

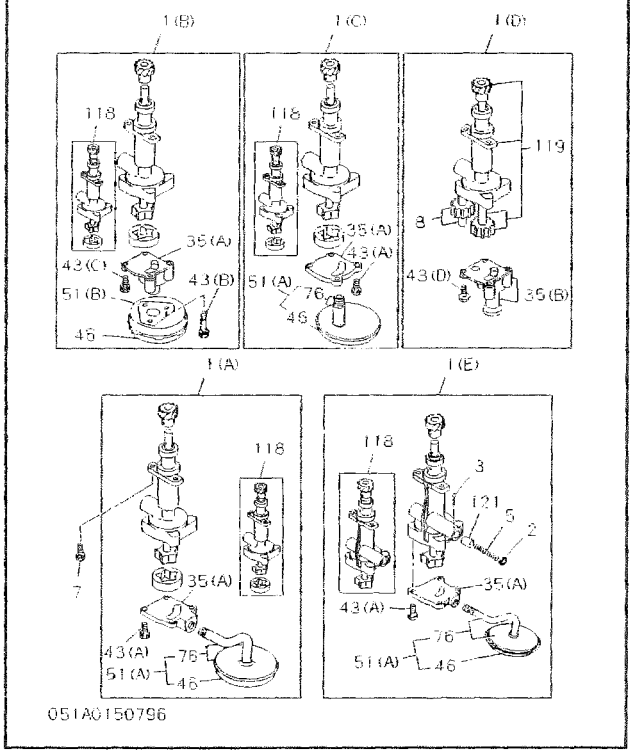

0-52	OIL AND VACUUM PIPING; ENGINE
FIG-NO.	(NO. 1)

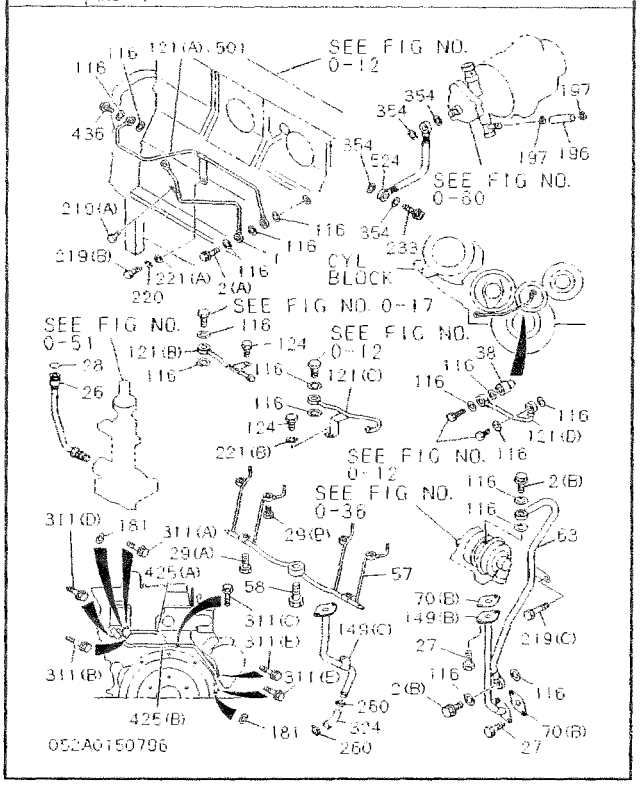

OIL AND VACUUM PIPING; ENGINE	0-52
(NO. 2)	FIG-NO.

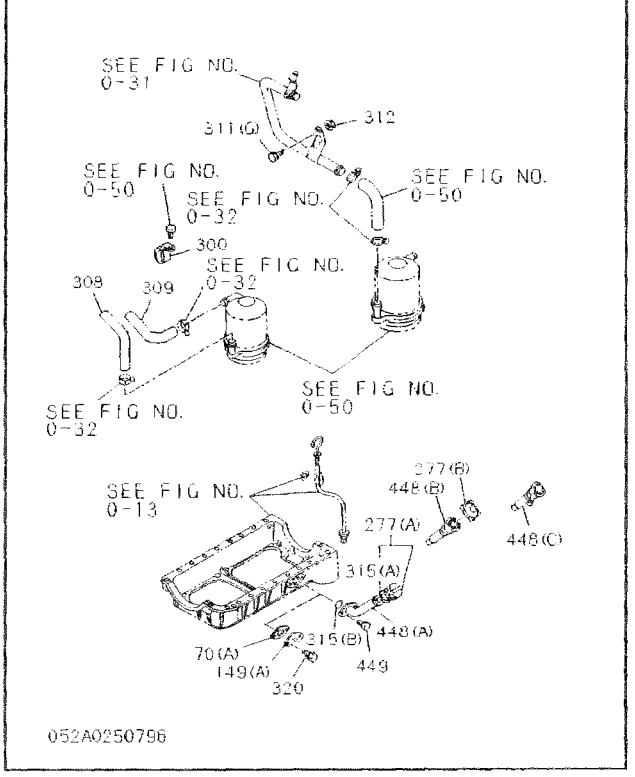

0-60	ENGINE ELECTRICAL CONTROL PARTS
FIG-NO.	(NO. 1)

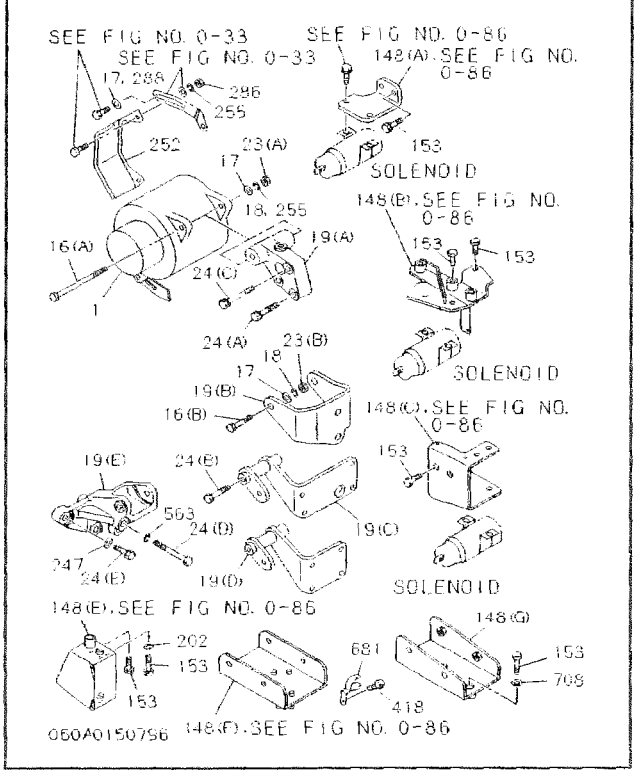

ILLUSTRATION INDEX

ENGINE ELECTRICAL CONTROL PARTS (NO. 2)	0-60 FIG-NO.

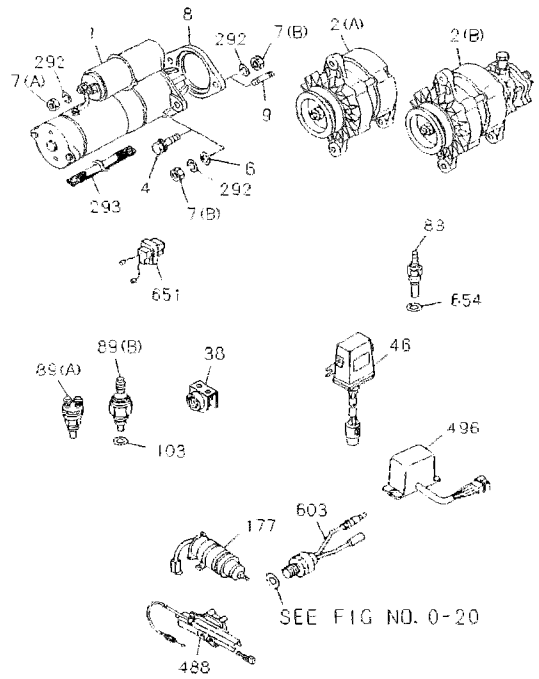

060A0250796

P-173

0-60 FIG-NO.	ENGINE ELECTRICAL CONTROL PARTS (NO. 3)

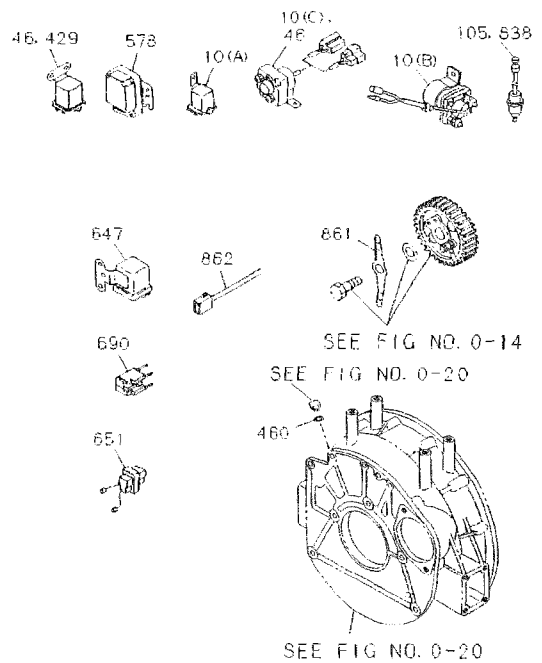

060A0250796

P-174

0-61 FIG-NO.	BATTERY AND BATTERY CABLE

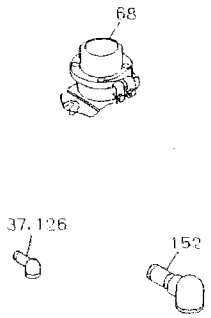

061A0150796

P-186

0-65 FIG-NO.	STARTER (NO. 1)

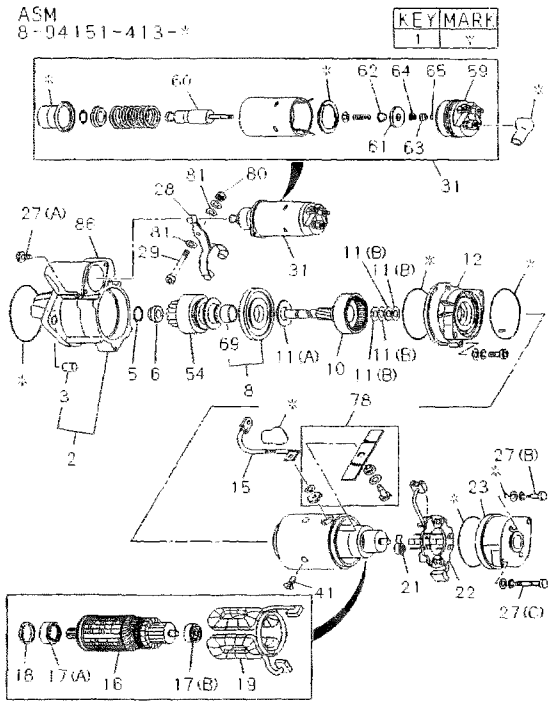

065A0150796

P-190

ILLUSTRATION INDEX

STARTER (NO. 2) — 0-65 FIG-NO.

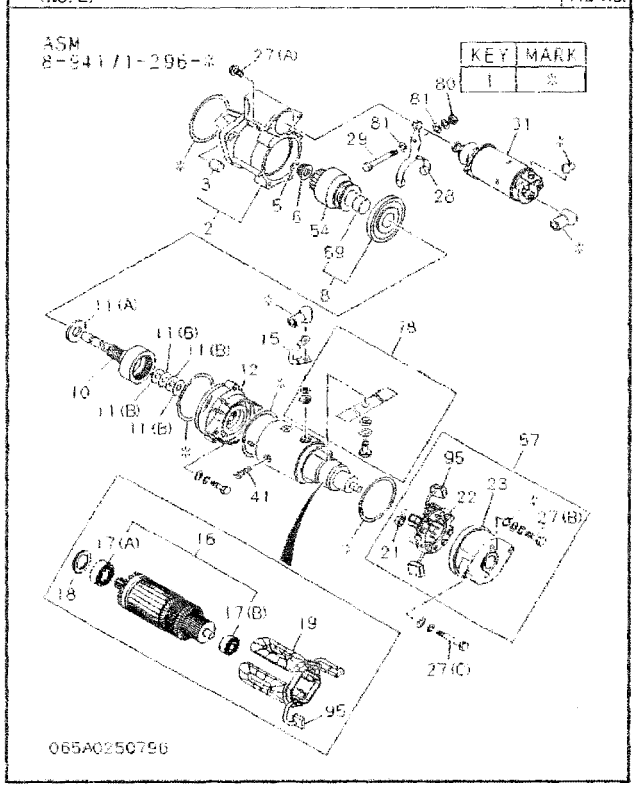

P-191

0-65 FIG-NO. — STARTER (NO. 3)

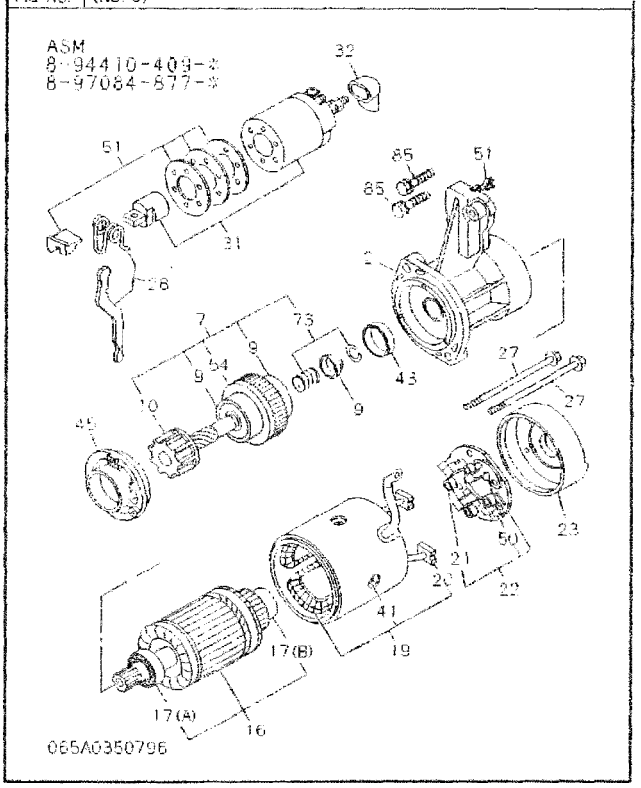

P-192

STARTER (NO. 4) — 0-65 FIG-NO.

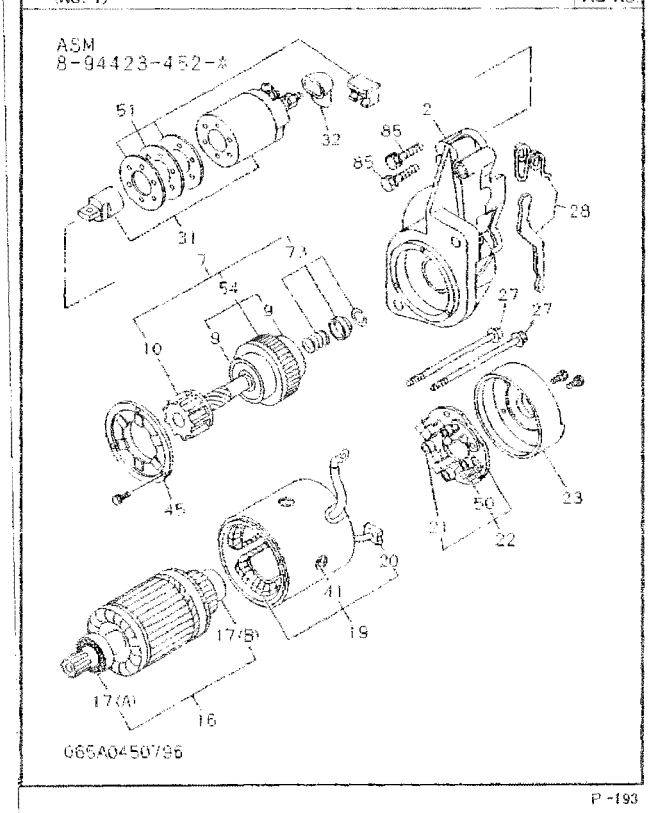

P-193

0-65 FIG-NO. — STARTER (NO. 5)

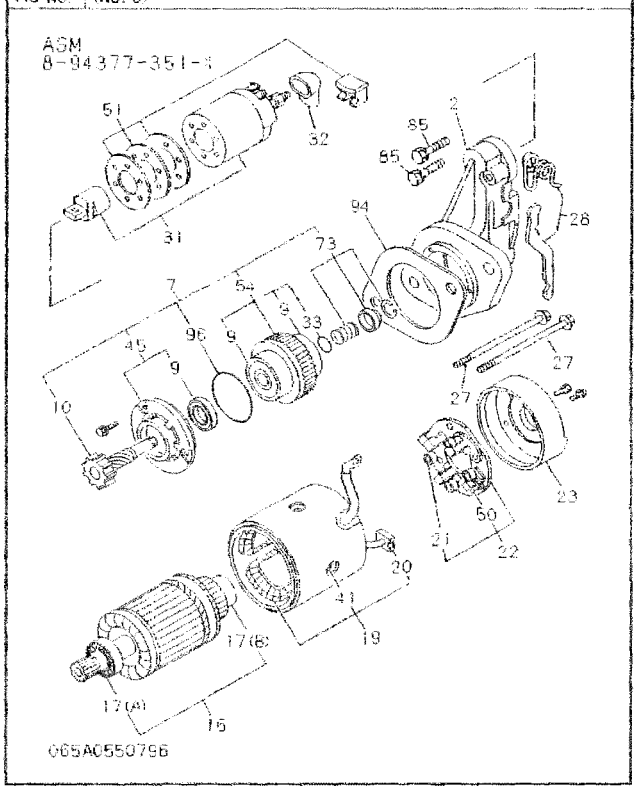

P-194

ILLUSTRATION INDEX

STARTER (NO. 6) | 0-65 FIG-NO.

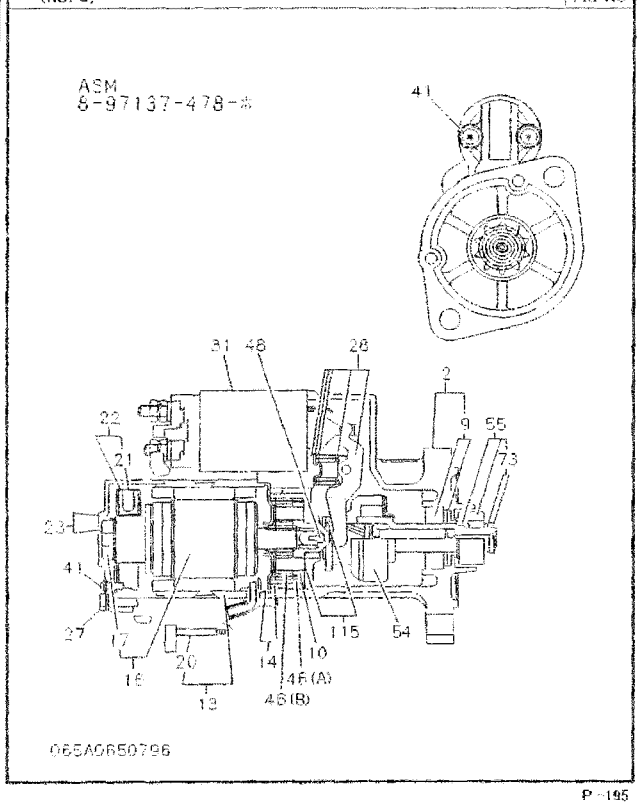

P-195

0-65 FIG-NO. | STARTER (NO. 7)

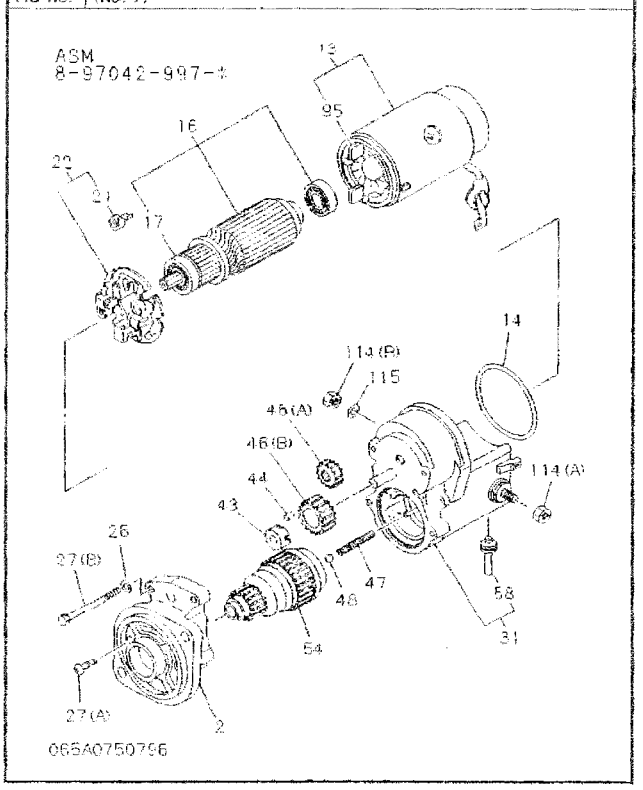

P-196

0-66 FIG-NO. | GENERATOR (NO. 1)

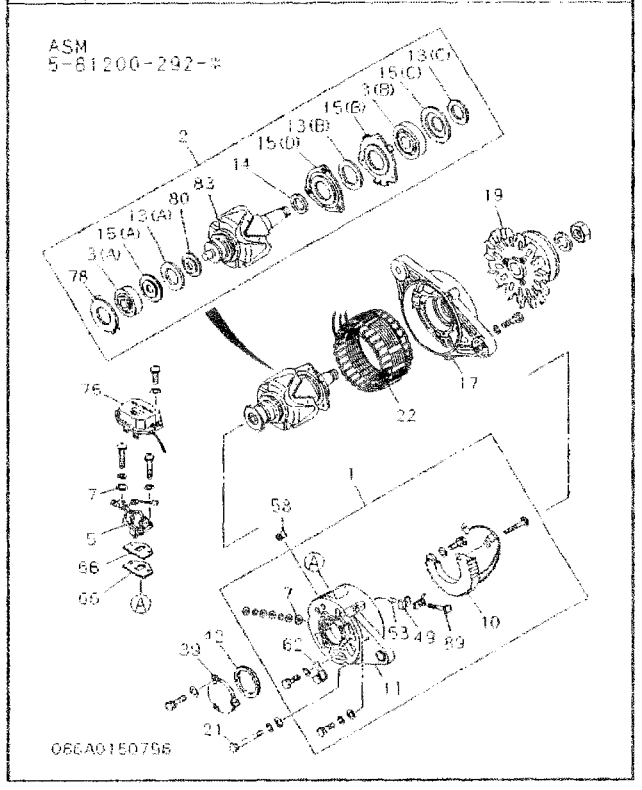

P-204

GENERATOR (NO. 2) | 0-66 FIG-NO.

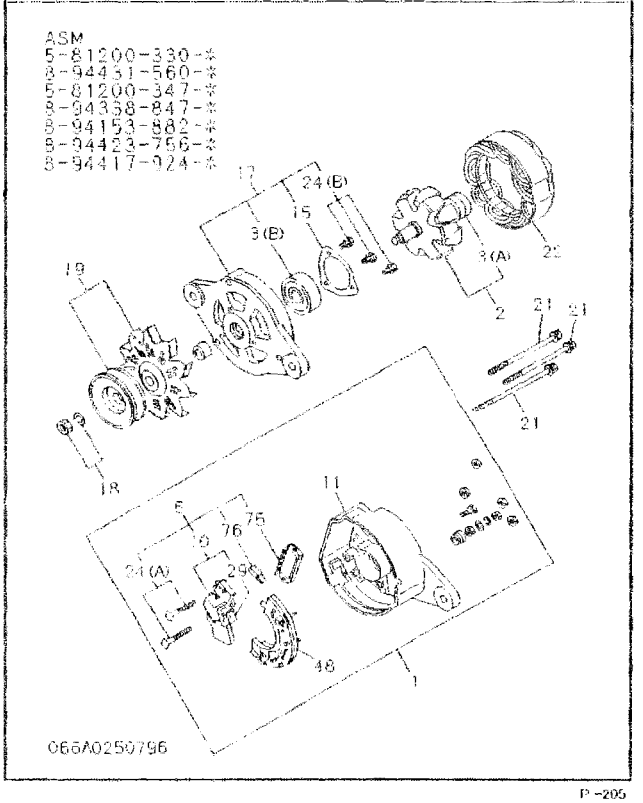

P-205

ILLUSTRATION INDEX

0-66	GENERATOR
FIG-NO.	(NO. 3)

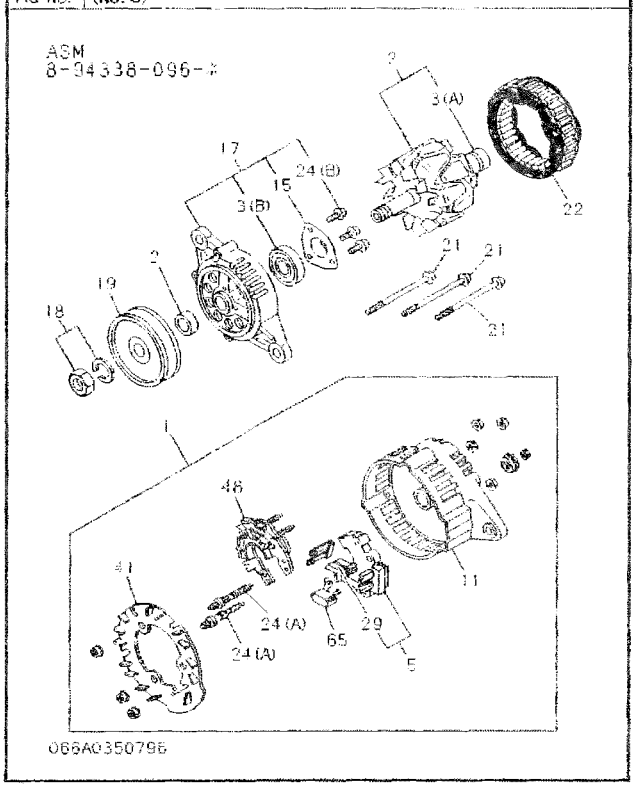

GENERATOR	0-66
(NO. 4)	FIG-NO.

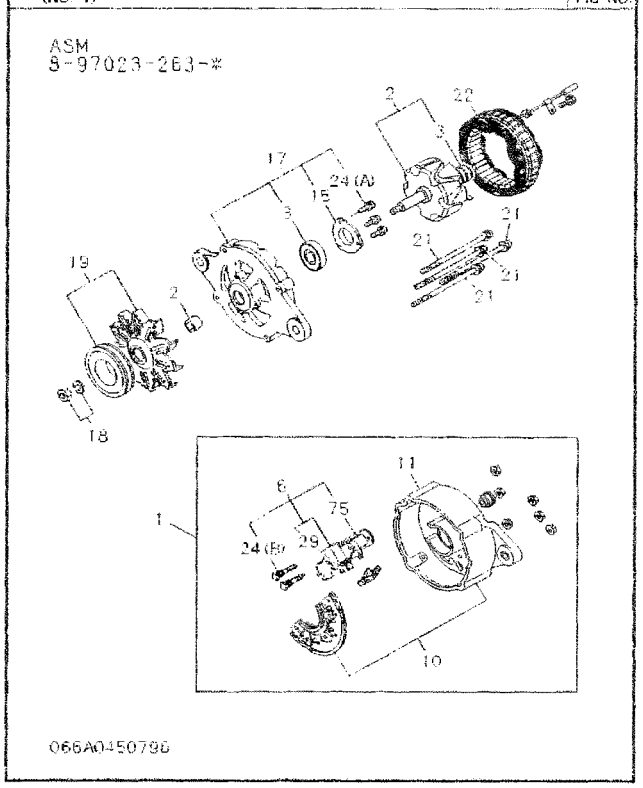

0-66	GENERATOR
FIG-NO.	(NO. 5)

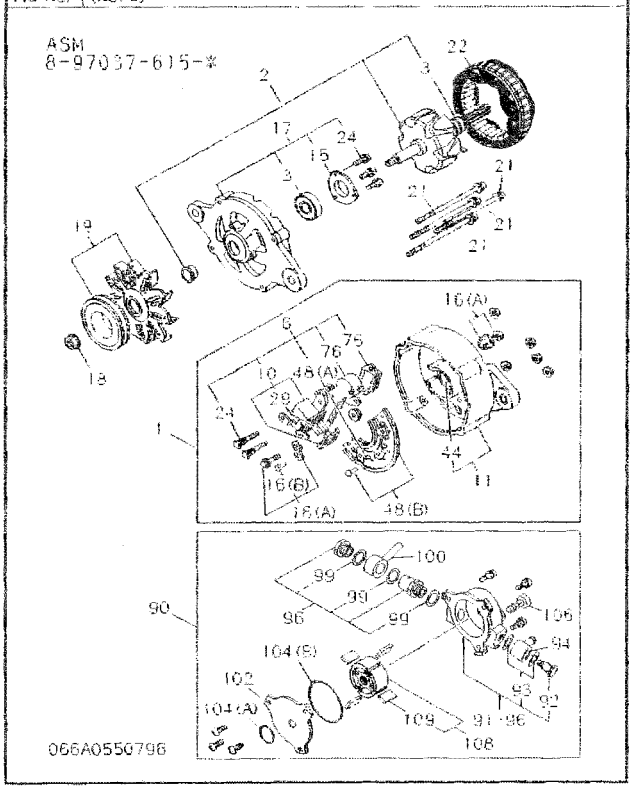

GENERATOR	0-66
(NO. 6)	FIG-NO.

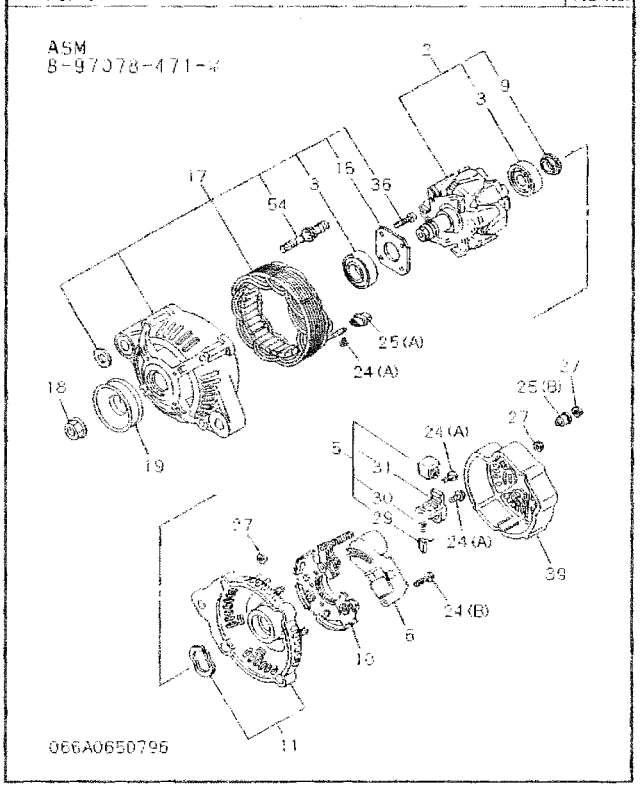

ILLUSTRATION INDEX

0-66	GENERATOR
FIG-NO.	(NO. 7)

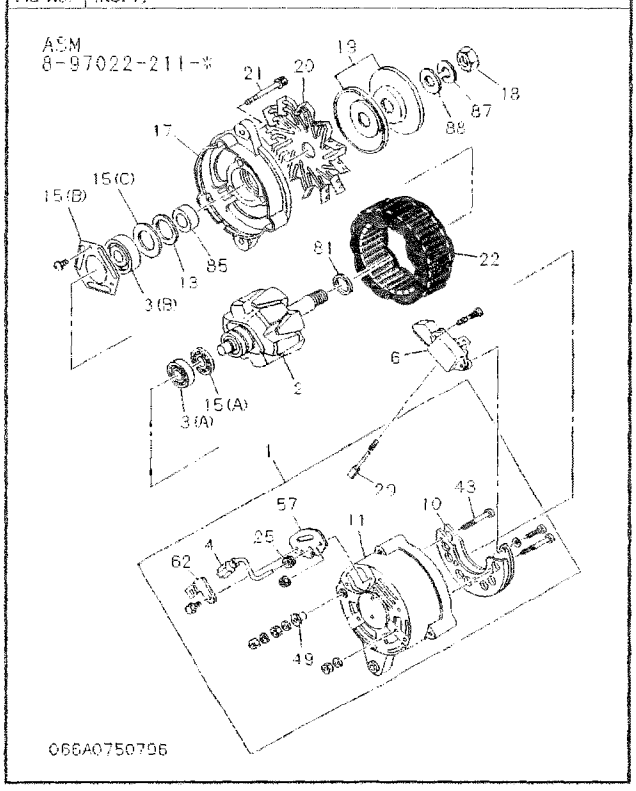

GENERATOR	0-66
(NO. 8)	FIG-NO.

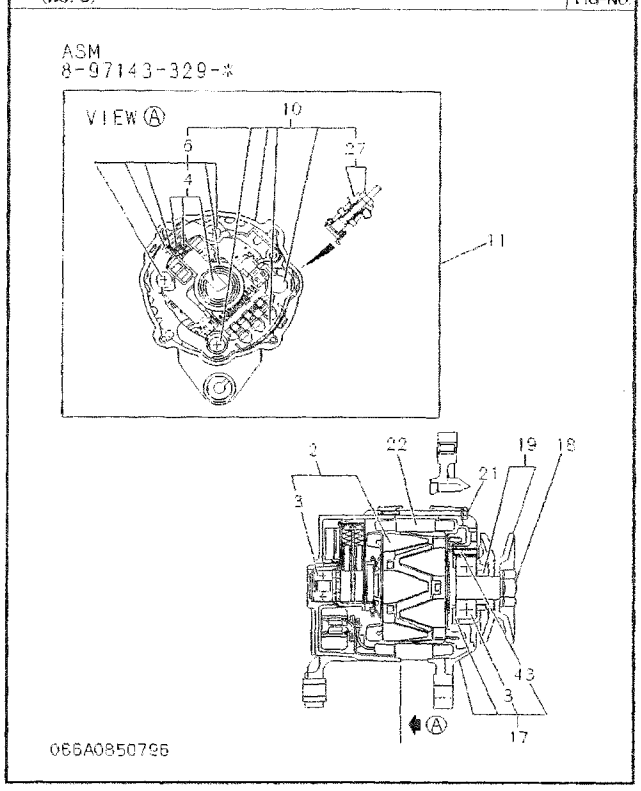

0-80	INJECTION PUMP
FIG-NO.	(NO. 1)

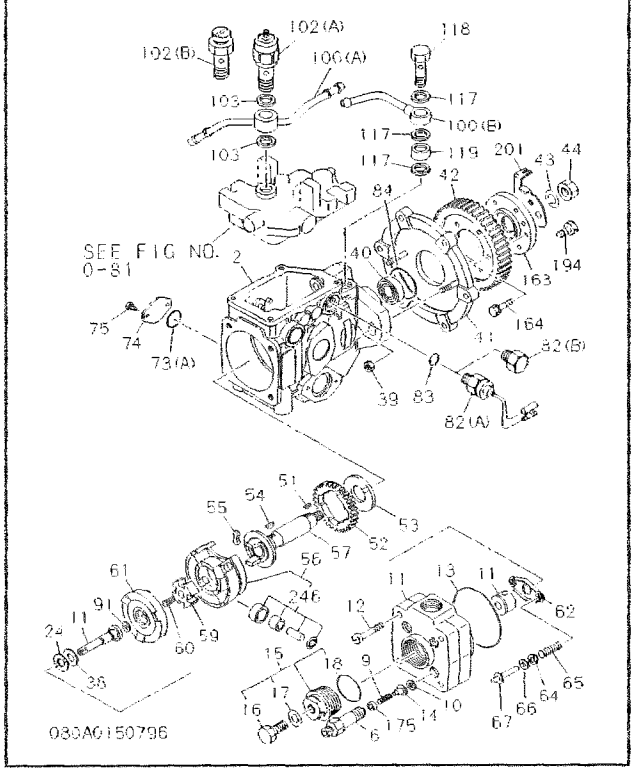

INJECTION PUMP	0-80
(NO. 2)	FIG-NO.

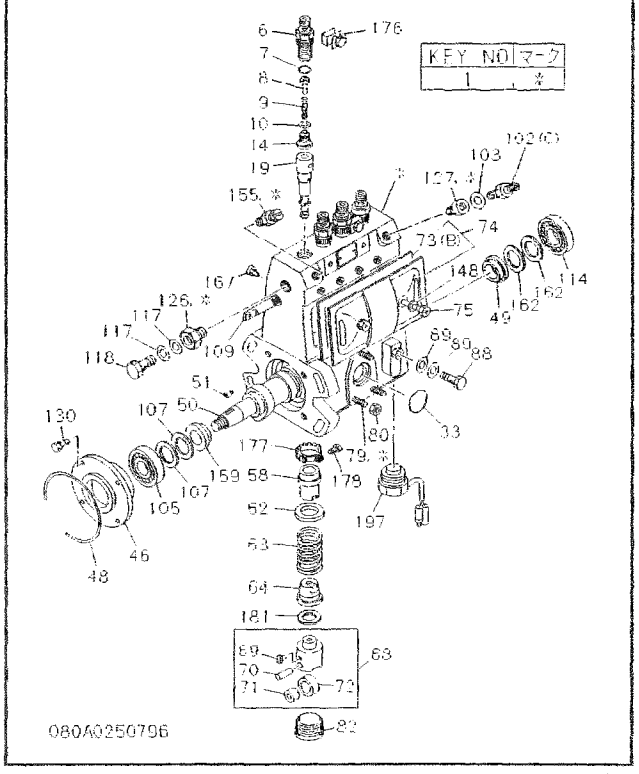

ILLUSTRATION INDEX

0-81 FIG-NO.	GOVERNOR; INJECTION PUMP (NO. 1)

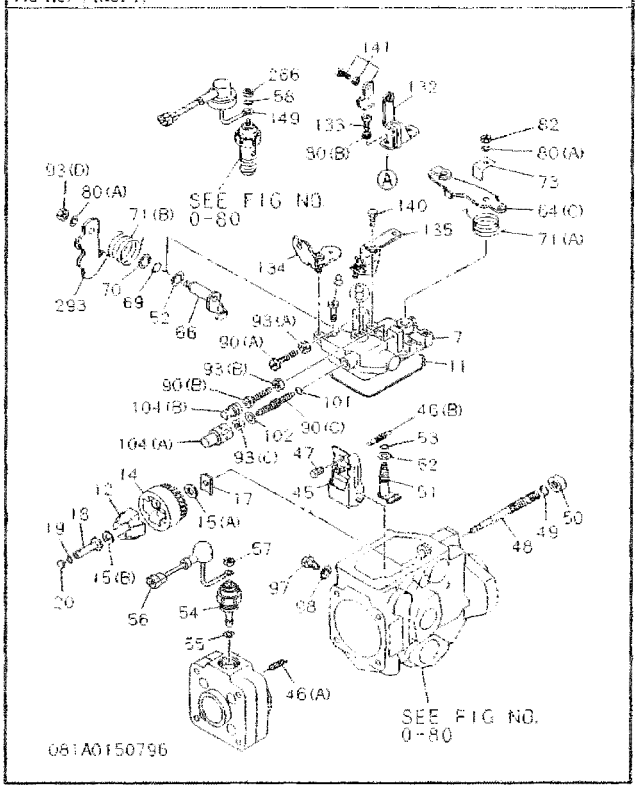

P -234

GOVERNOR; INJECTION PUMP (NO. 2)	0-81 FIG-NO.

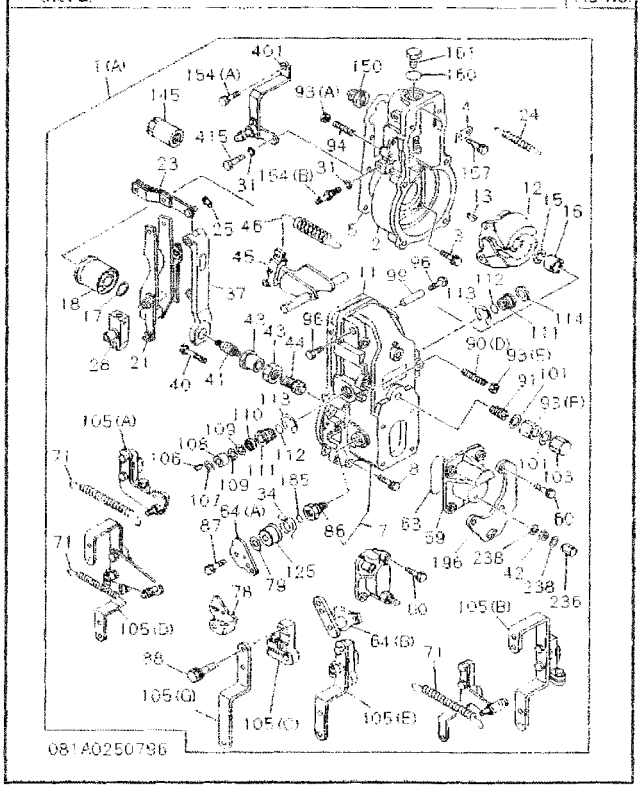

P -235

0-81 FIG-NO.	GOVERNOR; INJECTION PUMP (NO. 3)

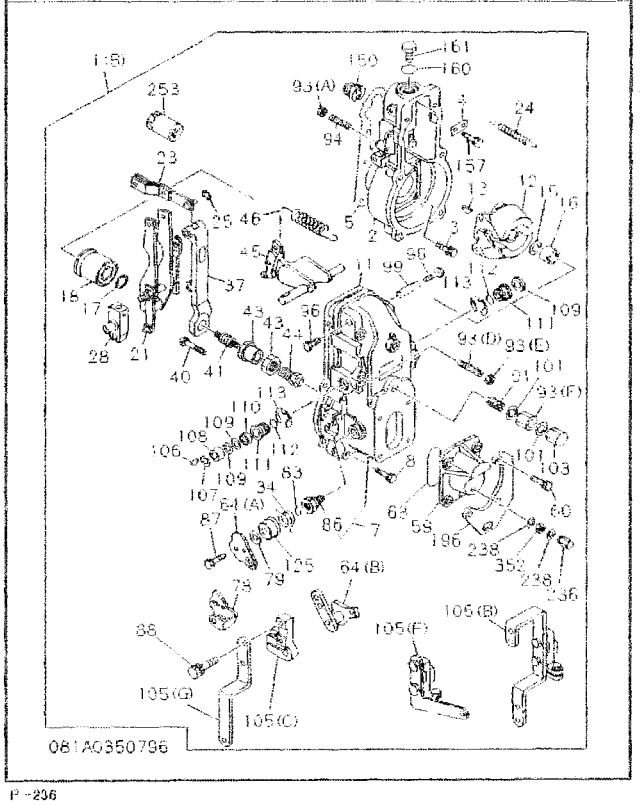

P -236

0-84 FIG-NO.	FEED PUMP; INJECTION PUMP (NO. 1)

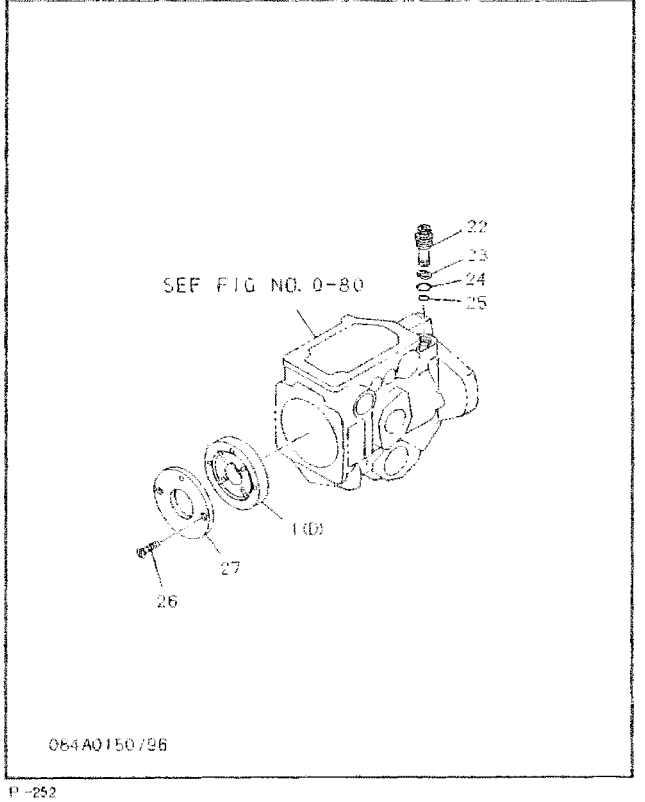

P -252

ILLUSTRATION INDEX

FEED PUMP; INJECTION PUMP (NO. 2)	0-84 FIG-NO

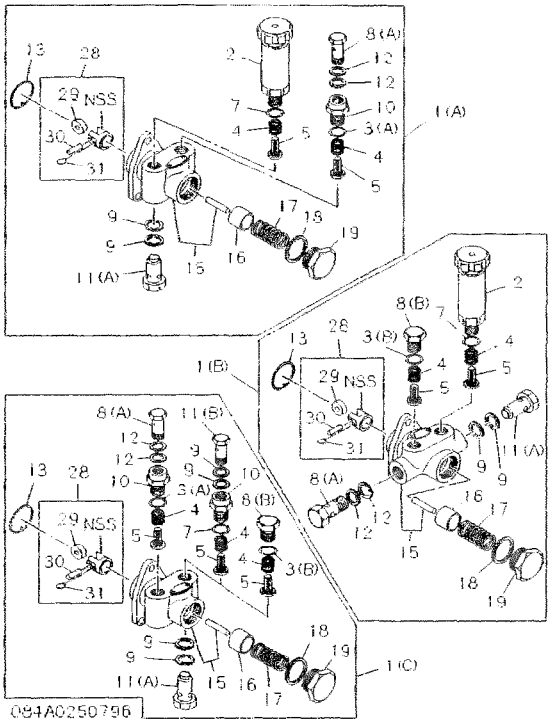

P -253

0-85 FIG-NO	AUTO TIMER; INJECTION PUMP

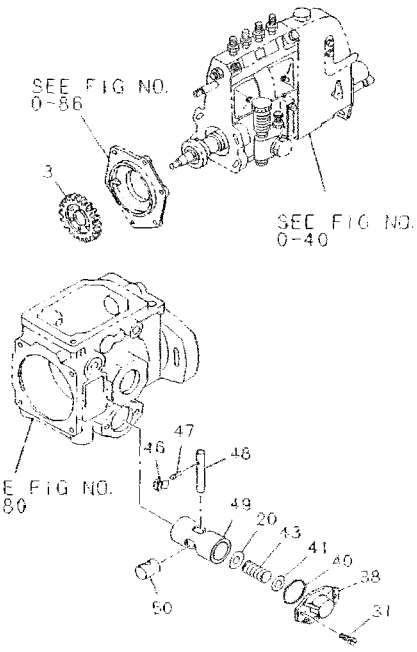

P -258

0-86 FIG-NO.	MISCELLANEOUS PARTS; INJECTION PUMP (NO. 1)

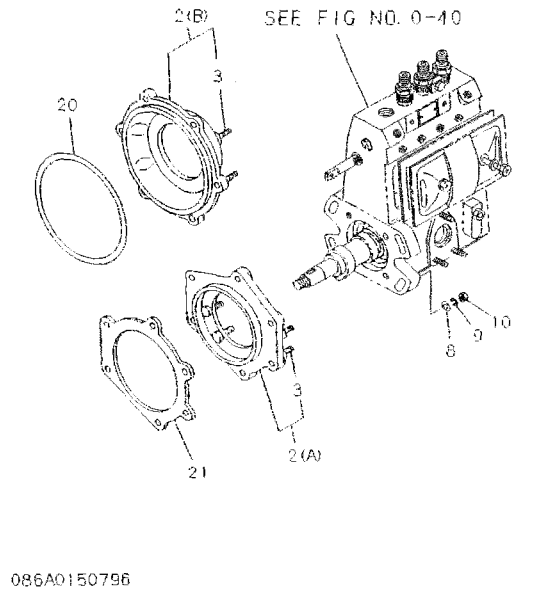

P -262

MISCELLANEOUS PARTS; INJECTION PUMP (NO. 2)	0-86 FIG-NO.

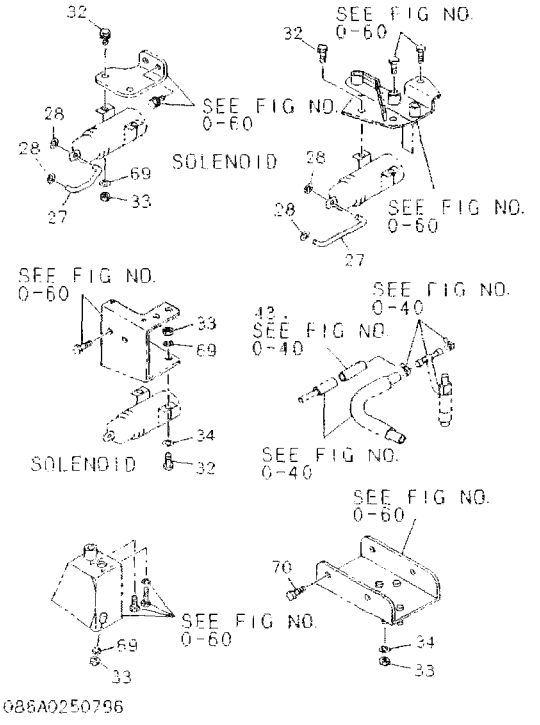

P -263

ILLUSTRATION INDEX

0-87	COUPLING: INJECTION PUMP
FIG-NO	

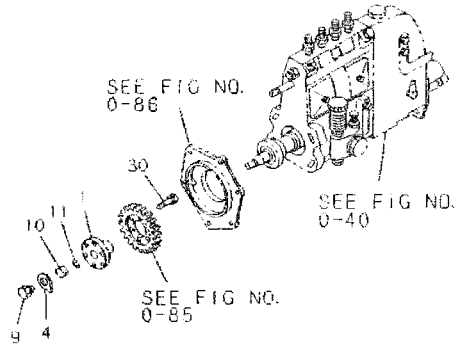

087A0150796

P -268

1-01	ACCELERATOR PEDAL AND CONTROL
FIG-NO	

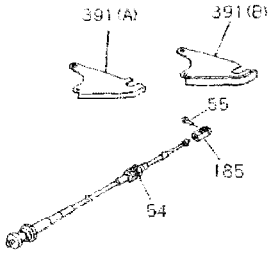

101A0150796

P -272

1-10	RADIATOR
FIG-NO.	

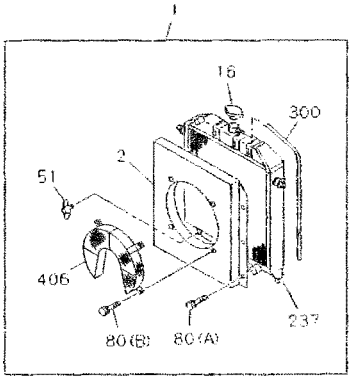

110A0150796

P -276

1-11	RADIATOR HOSE AND SUB TANK
FIG-NO	

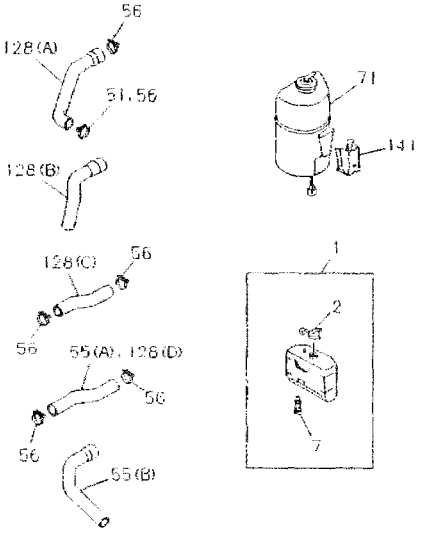

111A0150796

P -280

ILLUSTRATION INDEX

1-30 AIR CLEANER

FIG-NO.

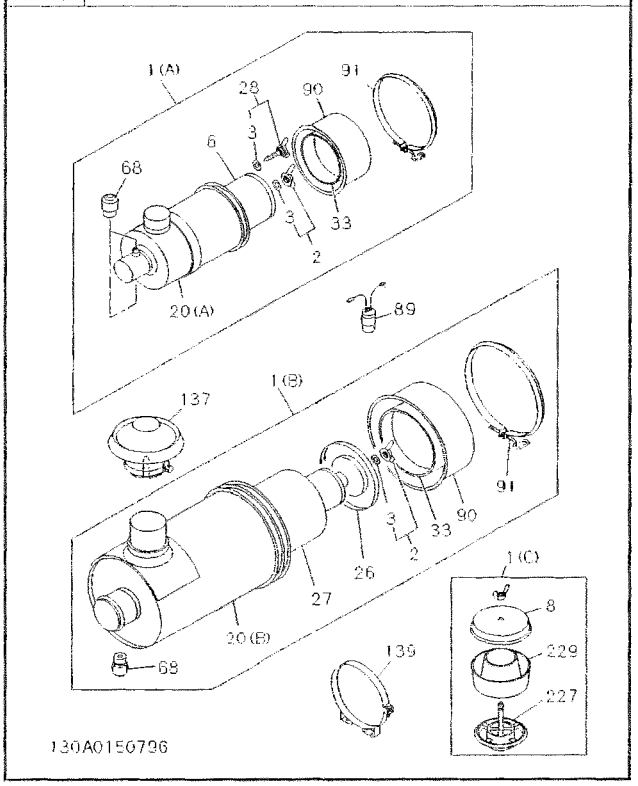

P -284

1-31 AIR DUCT

FIG-NO.

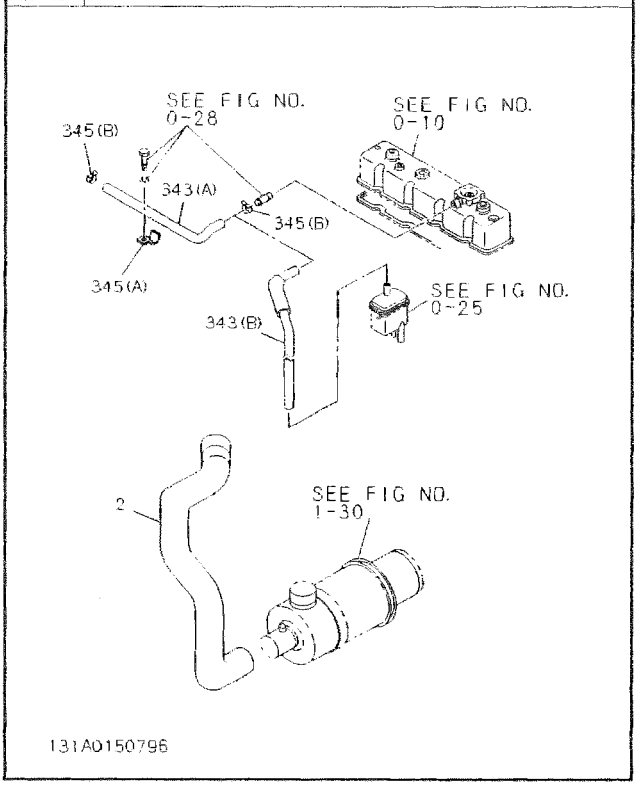

P -290

1-41 FUEL PIPING; CHASSIS

FIG-NO.

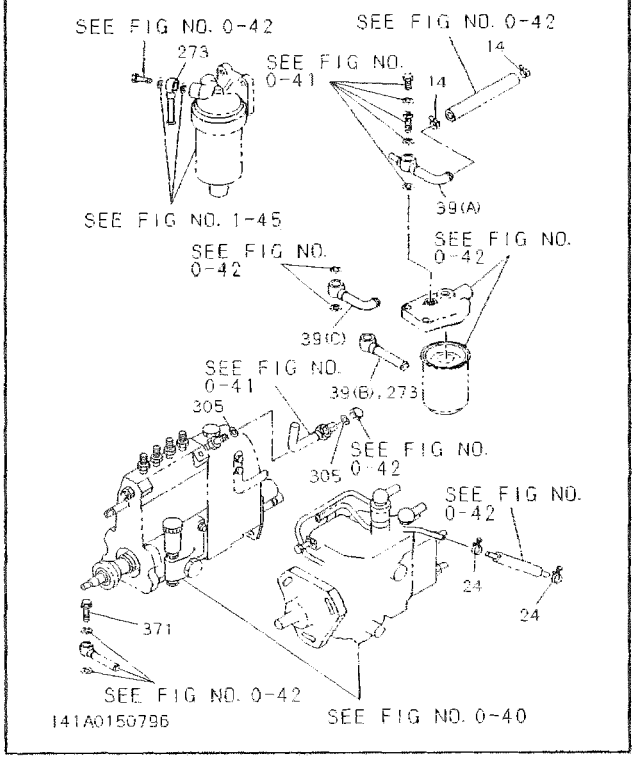

P -294

1-45 WATER SEDIMENTER; FUEL

FIG-NO.

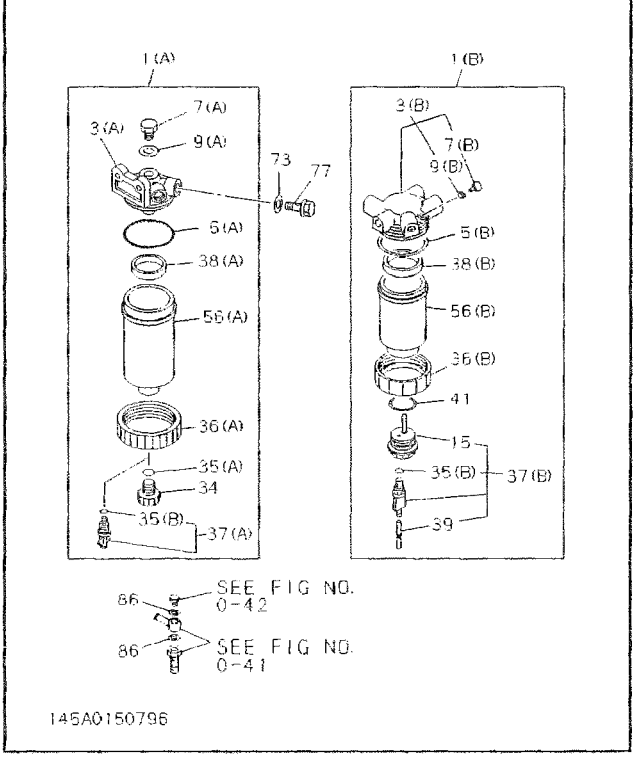

P -298

ILLUSTRATION INDEX

1-50	EXHAUST PIPE AND SILENCER
FIG-NO.	

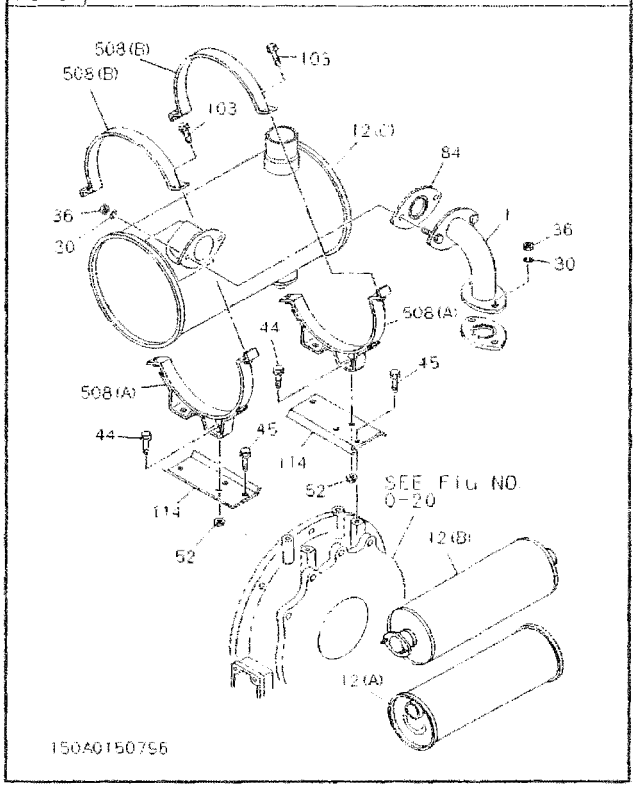

P-302

2-01	CLUTCH
FIG-NO.	

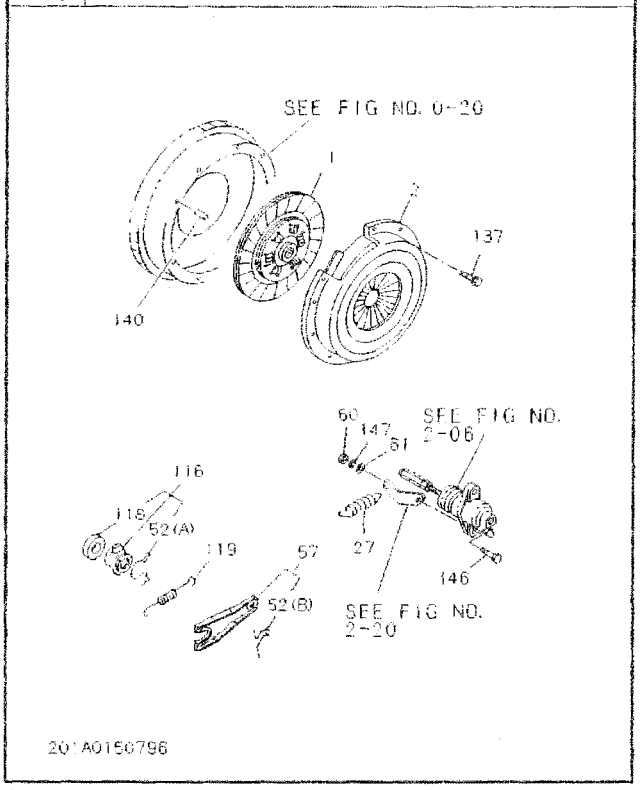

P-306

2-05	CLUTCH PIPING
FIG-NO	

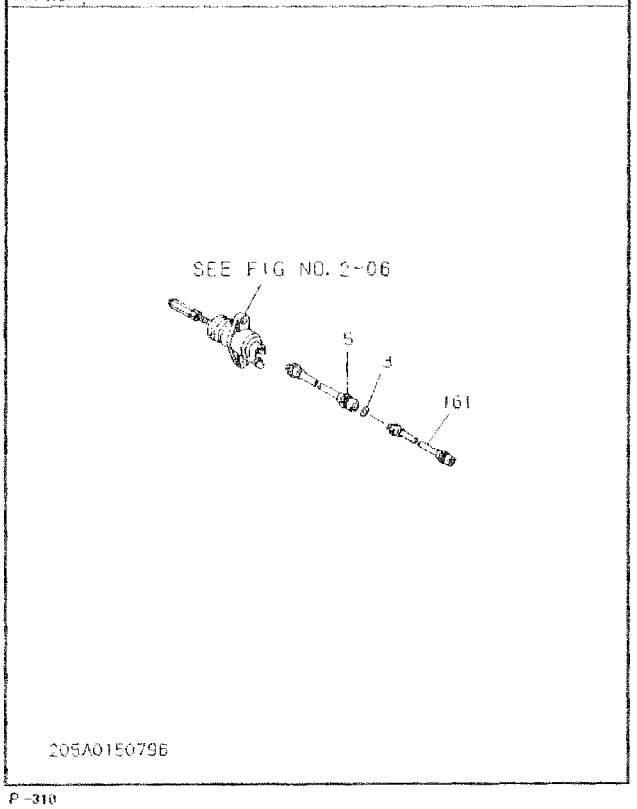

P-310

2-06	CLUTCH SLAVE CYLINDER
FIG-NO	

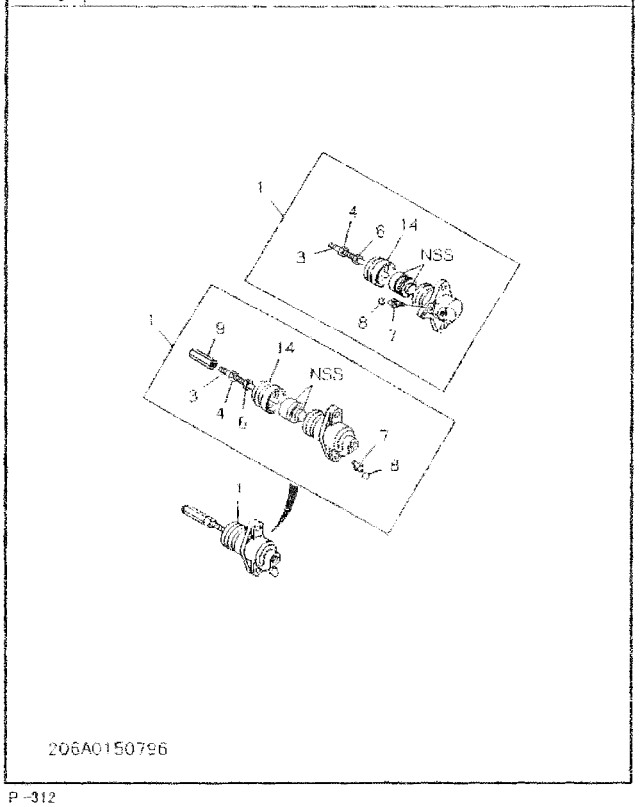

P-312

ILLUSTRATION INDEX

2-20	MANUAL TRANSMISSION ASM AND CASE
FIG-NO.	(NO. 1)

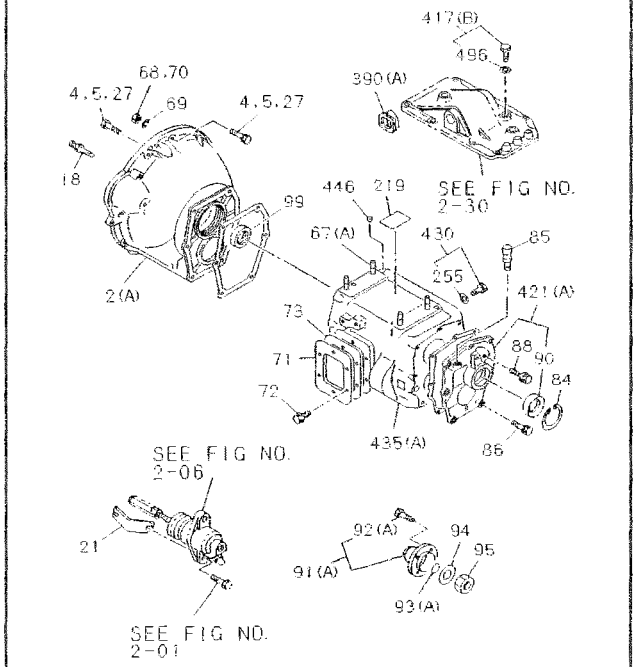

P-314

MANUAL TRANSMISSION ASM AND CASE	2-20
(NO. 2)	FIG-NO.

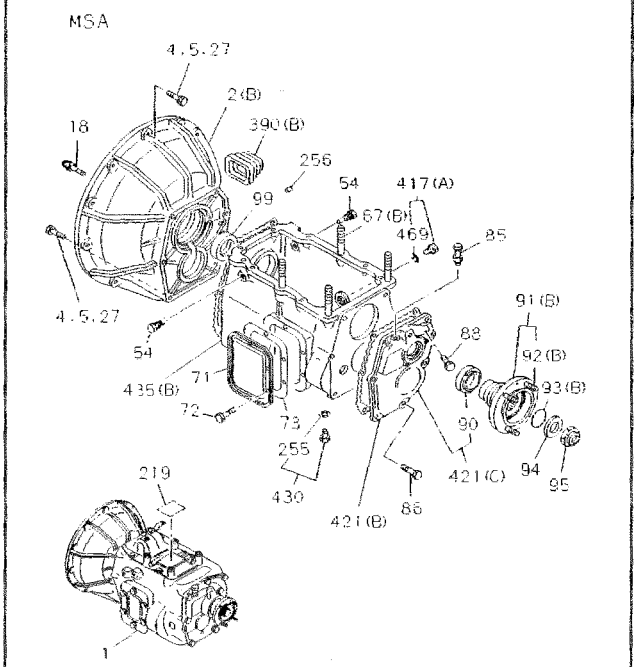

P-315

2-25	SPEEDOMETER DRIVEN GEAR
FIG-NO.	

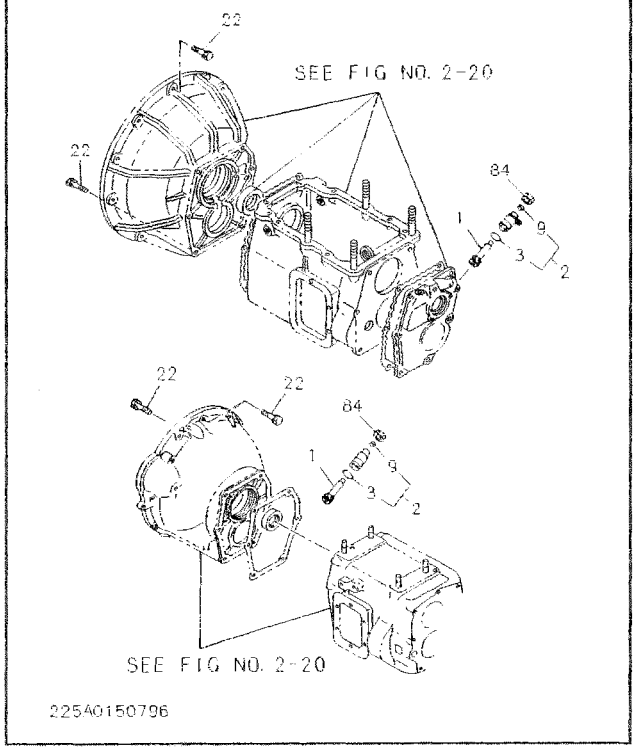

P-320

2-26	MANUAL TRANSMISSION GEAR
FIG-NO.	(NO. 1)

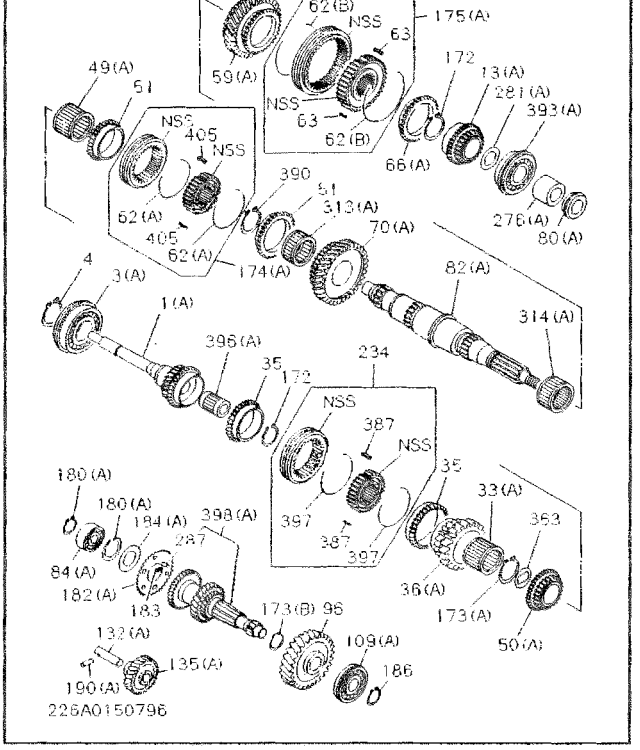

P-322

ILLUSTRATION INDEX

MANUAL TRANSMISSION GEAR (NO. 2)	2-26 FIG-NO.

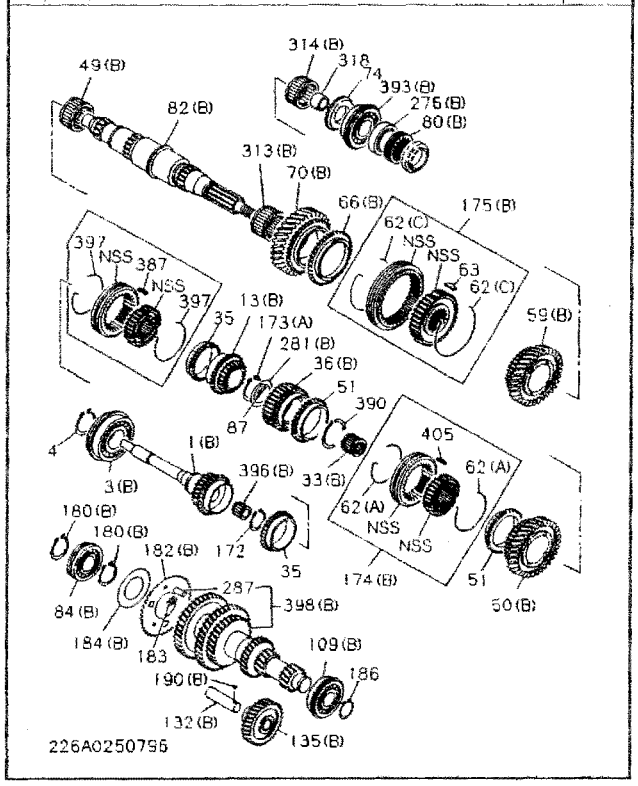

P-323

2-30 GEAR SHIFTER AND QUADRANT BOX (NO. 1)	
FIG-NO.	

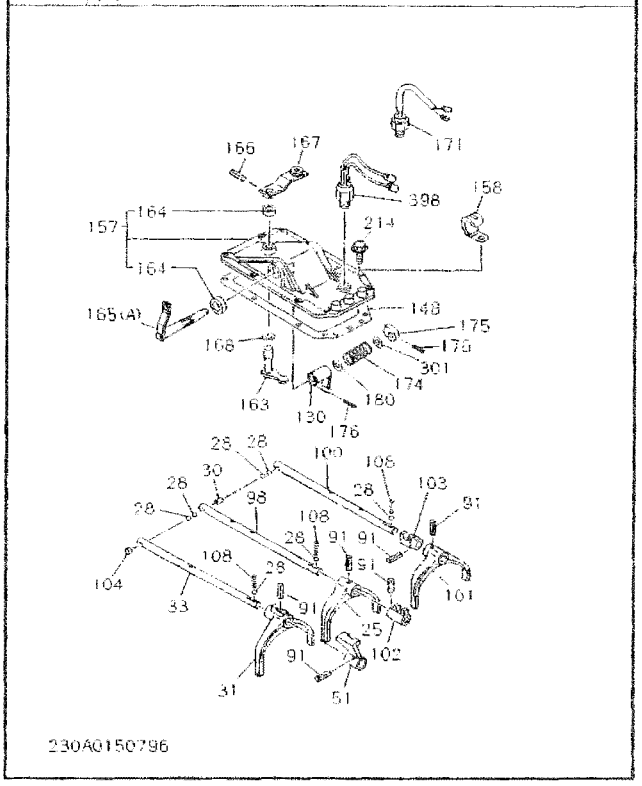

P-330

GEAR SHIFTER AND QUADRANT BOX (NO. 2)	2-30 FIG-NO.

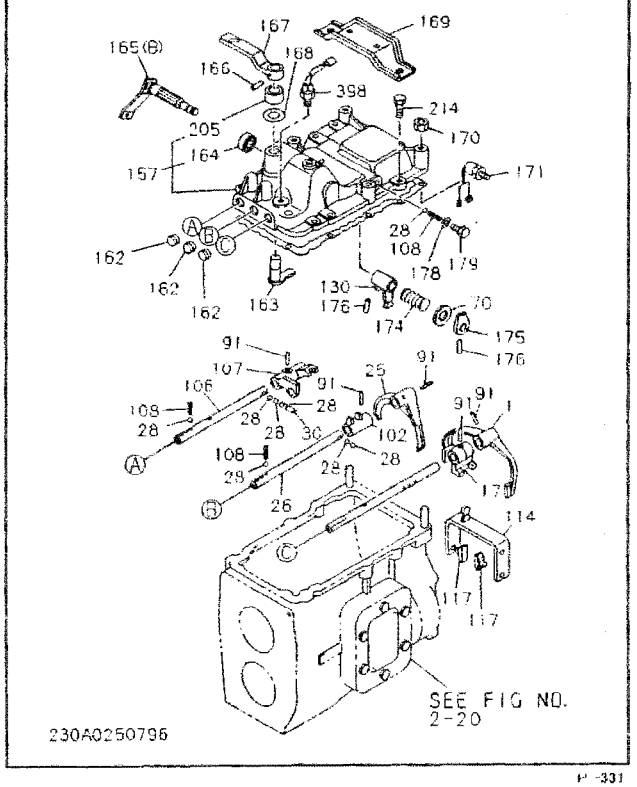

P-331

3-08 PARKING BRAKE	
FIG-NO.	

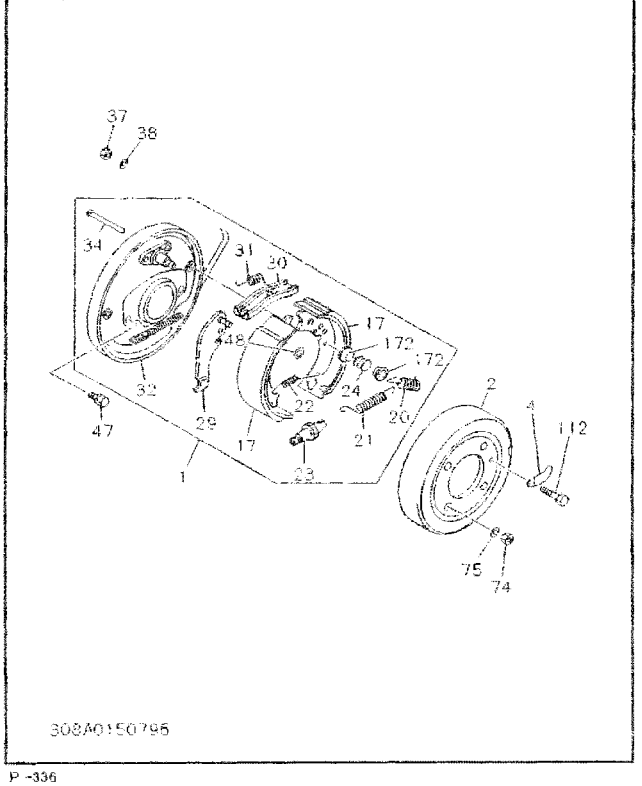

P-336

ILLUSTRATION INDEX

3-11	PARKING BRAKE CONTROL
FIG-NO.	

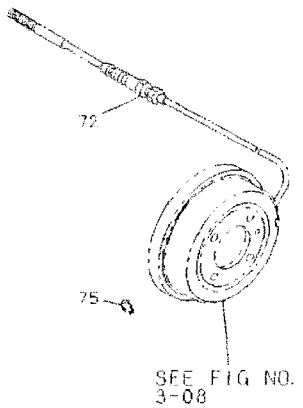

311A0150796

P-340

8-10	WIRING HARNESS AND FUSE
FIG-NO.	

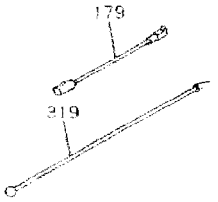

810A0150796

P-344

8-15	FIXING PARTS; WIRING HARNESS
FIG-NO.	

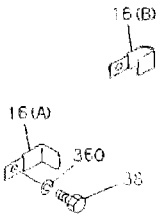

815A0150796

P-346

8-21	METER ASM
FIG-NO.	

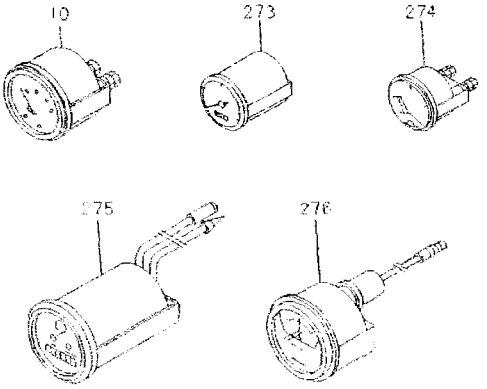

821A0150756

P-350

ILLUSTRATION INDEX

8-25	SWITCH AND RELAY; INSTRUMENT PANEL
FIG-NO.	

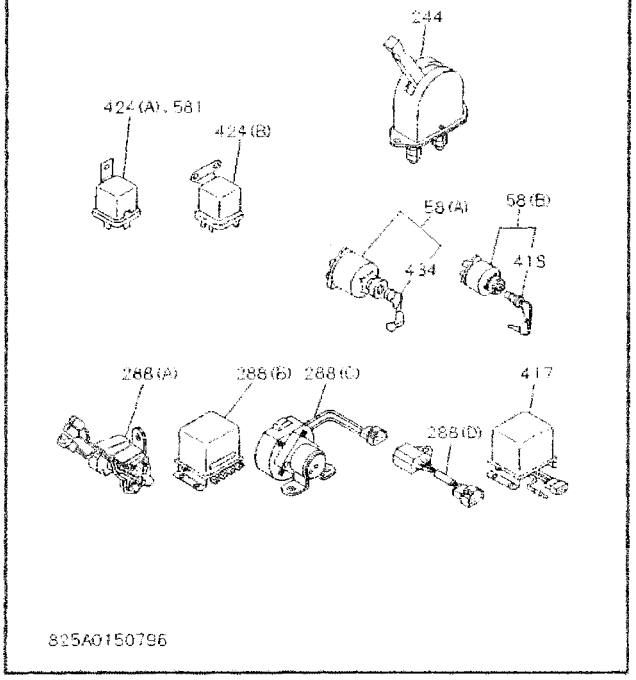

P-354

8-26	ELECTRICAL CONTROL AND OTHER PARTS
FIG-NO.	

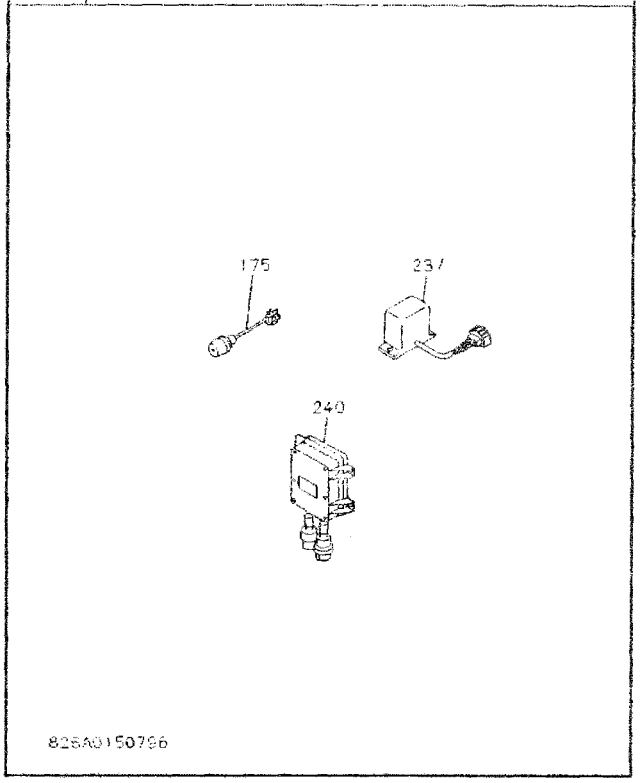

P-358

8-50	AIR CONDITIONING SYSTEM; FRONT
FIG-NO.	

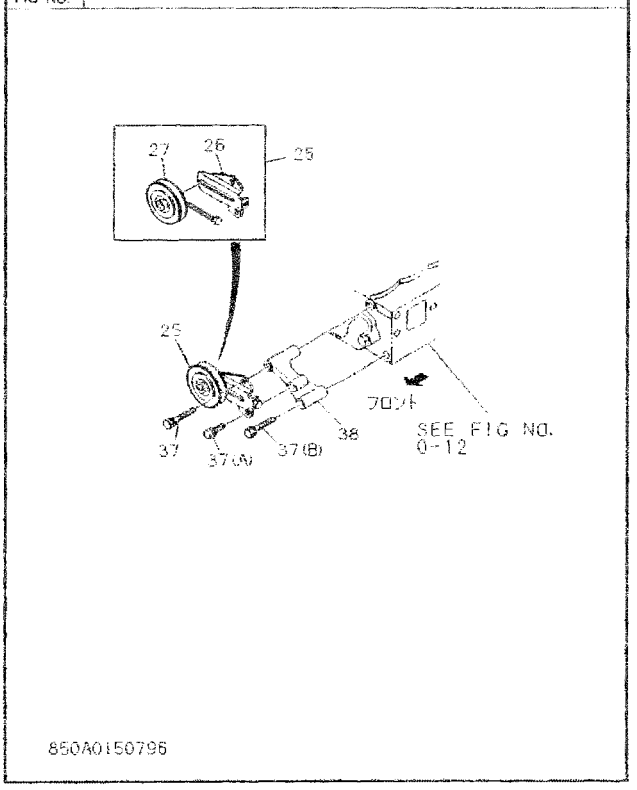

P-362

0

0-05	ENGINE GASKET KIT
FIG-NO.	

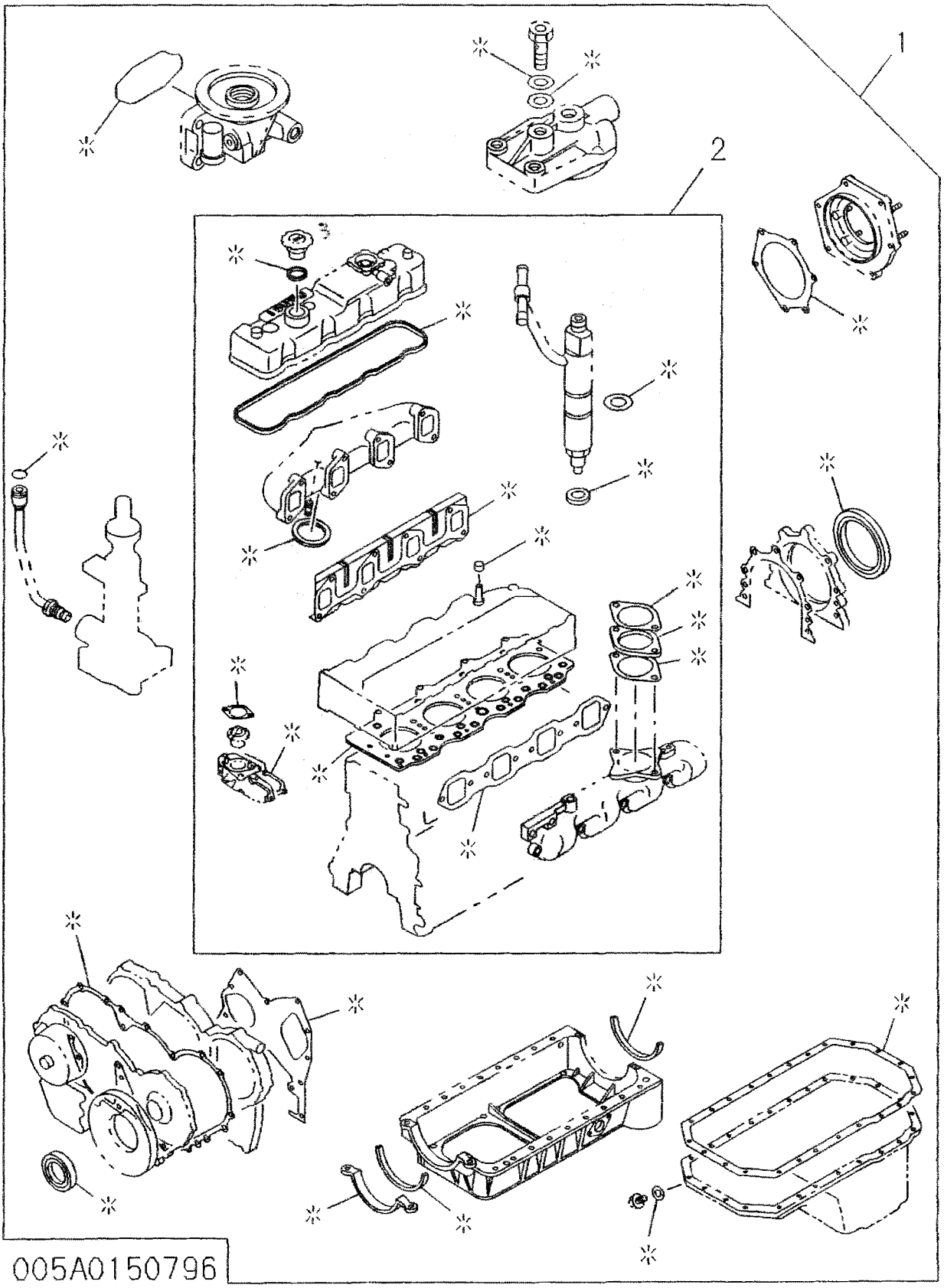

ENGINE GASKET KIT

FIG-NO. 0-05 A

KEY NO / PART NAME

4JB1 applicability columns (model code rows as printed):

PPPPP PPPPP PPPPP PPPPP PPPP PPPPP PPPPP PPPPP PPPPP
AAAAA AAAAA AAAAA AAAAA ABBB DDFHK KKKKK KLLLL LLNNN
0000 00001 11111 11122 2 00 0 0000L L U00 00 00
1234 56892 33456 78901 2 23 1 1234 0 G11 22 11
U 1 U U U
G G F G

ABCDE FGHIJ KLMNO PQRST UVWXY ZABCD EFGHI JKLMN OPQRS TUVWX

KEY NO	PART NUMBER	ITC	APPLIED DATE	LR	QTY	4JB1	Remarks
1	GASKET SET: ENG OVERHAUL						
	587810-9619		9503-		1	ABCDE GHIJ KLMNO PQRST U Z C QRS	
	587810-7738		9503-		1	F	
	587812-2943		9503-		1	V	
	587811-1436		9503-		1	WX	
	587812-8842		9503-		1	A	
	587811-3256		9503-		1	B	
	587811-6395		9503-		1	DEFGH	
	587811-5286		9503-		1	IJ	
	587811-1385		9503-		1	KL OP	
	587810-7719	A	9503-9704		1	MN	
	587813-3820		9705-		1	MN	
2	GASKET SET: ENG HD OVERHAUL						
	587811-3946		9503-		1	ABCDE FGHIJ KLMNO PQRST UVWX Z BC IJKLMN OPQRS	
	587812-8902		9503-		1	A	
	587811-3954		9503-		1	DEFGH	
3	[illegible]						

0-05 B ENGINE GASKET KIT

FIG-NO.

Model codes (serial columns):

```
4JB1:    PPPPPPPPPPPPPPPPP  PPTTTT
         YYYYYVVVWWWWWWWW  TTPPPP
          0000 00 00000000  QQBKKX
          1234 12 23467 89    0  0
                              1  1
         ABCDEFGHIJKLMNOPQRSTUVWXY
A-4JB1:  PPPPPPPPPPPPPPPPPPPPP
         AAAAAAAAAAAAAAAAAYYYY
         AAAAAAAAAAAAAAAAWAAAA
           000000000111110 000
           123456789012345 1 123
         ZABCDEFGHIJKLMNOPQRSTUVWX
```

KEY NO	PART NAME / PART NUMBER	ITC	APPLIED DATE	LR	QTY	4JB1	A-4JB1	Remarks
1	GASKET SET: ENG OVERHAUL							
	587810-9619		9503-		1	AB D FG IJKLMNO		
	587812-8852		9503-		1	C		
	587812-8832		9503-		1	E		
	587813-5570		9807-		1	H		
	587812-8821		9503-		1	P		
	587811-3276		9503-		1	RS		
	587812-8872		9503-		1	T		
	587813-5560		9807-		1	UV		
	587810-9056		9503-		1	W		
	587812-8802		9503-		1		ZABCDEFG Q S	
	587813-5580		9807-		1		HIJ L NO	
	587813-5590		9807-		1		K	
	587813-5600		9807-		1		M	
	587812-8843		9503-		1		P	
	587812-8812		9503-		1		R	
	587813-5610		9807-		1		T	
2	GASKET SET: ENG HD OVERHAUL							
	587811-3946		9503-		1	ABCDE GH	HIJ LMNOP R T	
	587812-8882		9503-		1	F IJKLM OP		
	587812-8892		9503-		1	N		
	587811-3975		9503-		1	RSTUV		
	587812-8913		9503-		1	W	K	
	587811-3954		9503-		1		ZABCDEFG Q S	

MEMO

0-10	CYLINDER HEAD COVER
FIG-NO.	

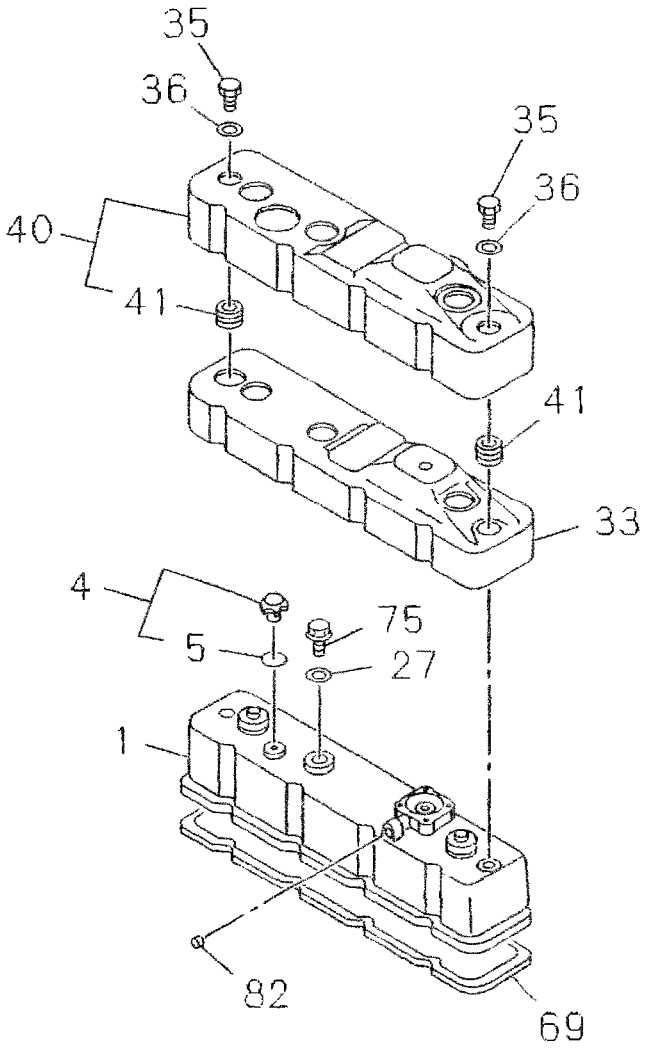

010A0150796

CYLINDER HEAD COVER

0-10 A

FIG-NO.

KEY NO	PART NAME / PART NUMBER	ITC	APPLIED DATE	LR	QTY	4JB1										Remarks
						PPPPP	PPPPP	PPPPP	PPPPP	PPPP	PPPPP	PPPPP	PPPPP	PPPPP		
						AAAAA	AAAAA	AAAAA	AAAAA	ABBB	DDFHK	KKKKK	KLLLL	LLNNN		
						0000	00001	11111	11122	2 00	0	0000L	L U00	00 00		
						1234	56892	33456	78901	2 23	1	1234	0 G11	22 11		
								U					1 U	U U		
								G					G	F G		
						ABCDE	FGHIJ	KLMNO	PQRST	UVWXY	ZABCD	EFGHI	JKLMN	OPQRS	TUVWX	
1	COVER; CYL HD															
	894476-6960		9503-		1	ABCDE	F HIJ	KLMNO	PQRS	UVWX	Z BC	I	JKLMN	OPQRS		
	897081-7421		9503-		1		G		T		A D	EFGH				
4	CAP; OIL FILLER															
	894133-2075		9503-		1	ABCDE	FGHIJ	KLMNO	PQRST	UVWX	ZABCD	EFGHI	JKLMN	OPQRS		
5	GASKET; OIL FILLER															
	894123-6231		9503-		1	ABCDE	FGHIJ	KLMNO	PQRST	UVWX	ZABCD	EFGHI	JKLMN	OPQRS		ID=32 OD=40
27	GASKET; HD COVER									--ALSO INCLUDED IN GASKET SET(ENGINE)						
	894153-0510	C	9502-9502		3	ABCDE	FGHIJ	KLMNO	PQRST	VWX	ZABCD	EFG I	JKLMN	OPQRS		ID=20.0
	894202-4563		9503-		3	ABCDE	FGHIJ	KLMNO	PQRST	UVWX	ZABCD	EFGHI	JKLMN	OPQRS		ID=19.5
33	RUBBER; SPACE. CYL HD COVER															
	894133-7346	A	9503-9701		1			M			B	I	J			
	897147-9210		9702-		1			M			B	I	J			
35	BOLT; NOISE SHIELD COVER															
	020800-8140	A	9503-9804		2			M			B	I	J			M8X14
	020800-8120		9805-		2			M			B	I	J			M8X14
36	WASHER; PL. NOISE SHIELD COVER															
	909651-1120		9503-9508		2			M			B	I	J			ID=8.5 OD=30 T=2.6
40	COVER															
	894133-7322		9503-		1			M			B	I	J			
41	GROMMET; HD COVER. OUTER															
	894256-9590		9503-		2			M			B	I	J			
69	GASKET; HD TO COVER									--ALSO INCLUDED IN GASKET SET(ENGINE)						
	894247-9031	A	9503-9508		1	ABCDE	FGHIJ	KLMNO	PQRST	VWX	ZABCD	EFG I	JKLMN	OPQRS		
	897118-7680		9509-		1	ABCDE	FGHIJ	KLMNO	PQRST	UVWX	ZABCD	EFGHI	JKLMN	OPQRS		
75	NUT; CAP. HD COVER															
	894173-4300		9503-		3	ABCDE	FGHIJ	KLMNO	PQRST	UVWX	ZABC	I	JKLMN	OPQRS		M8 OD=24
	894158-1080		9503-		3						D	EFGH				M8 OD=19

0-10 B CYLINDER HEAD COVER

FIG-NO.

KEY. NO	PART NAME	PART NUMBER	ITC	APPLIED DATE	LR	QTY	4JB1	A-4JB1	Remarks
							PPPPPPPPPPPPPPPP PPTTTT YYYYYVVVWWWWWWW TTPPPP 0000 00 0000000 00BKKX 1234 12 2346789 0 0 1 1	PPPPPPPPPPPPPPPPPPPP AAAAAAAAAAAAAAAAAYYY AAAAAAAAAAAAAAAAWAAA 0000000001111110 000 1234567890123451 123	
							ABCDEFGHIJKLMNOPQRSTUVWXY	ZABCDEFGHIJKLMNOPQRSTUVWX	
1	COVER: CYL HD								
		894476-6960		9503-		1	AB FGHIJKLM P RST W		
		897081-7421		9503-		1	CDE NO UV	ZABCDEFGHIJKLMNOPQRST	
4	CAP: OIL FILLER								
		894133-2075		9503-		1	ABCDEFGHIJKLMNOP RST UVW	ZABCDEFGHIJKLMNOPQRST	
5	GASKET: OIL FILLER								
		894123-6231		9503-		1	ABCDEFGHIJKLMNOP RST UVW	ZABCDEFGHIJKLMNOPQRST	ID=32 OD=40
27	GASKET: HD COVER						—ALSO INCLUDED IN GASKET SET(ENGINE)		
		894153-0510	A	9503-9508		3	ABCDEFG IJKLMNOP RST W	ZA Q	ID=20.0
		894202-4563		9509-		3	ABCDEFGHIJKLMNOP RST UVW	ZABCDEFGHIJKLMNOPQRST	ID=19.5
69	GASKET: HD TO COVER						—ALSO INCLUDED IN GASKET SET(ENGINE)		
		894247-9031	A	9503-9508		1	ABCDEFG IJKLMNOP RST W	ZA Q	
		897118-7680		9509-		1	ABCDEFGHIJKLMNOP RST UVW	ZABCDEFGHIJKLMNOPQRST	
75	NUT: CAP, HD COVER								
		894173-4300		9503-		3	ABCDEFGHIJKLMNOP RST UVW	ZABCDEFGHIJKLMNOPQRST	M8 OD=24
82	PLUG: CYL HD COVER								
		894474-1590		9503-		1	RST		

MEMO

0-11	CYLINDER HEAD
FIG-NO.	

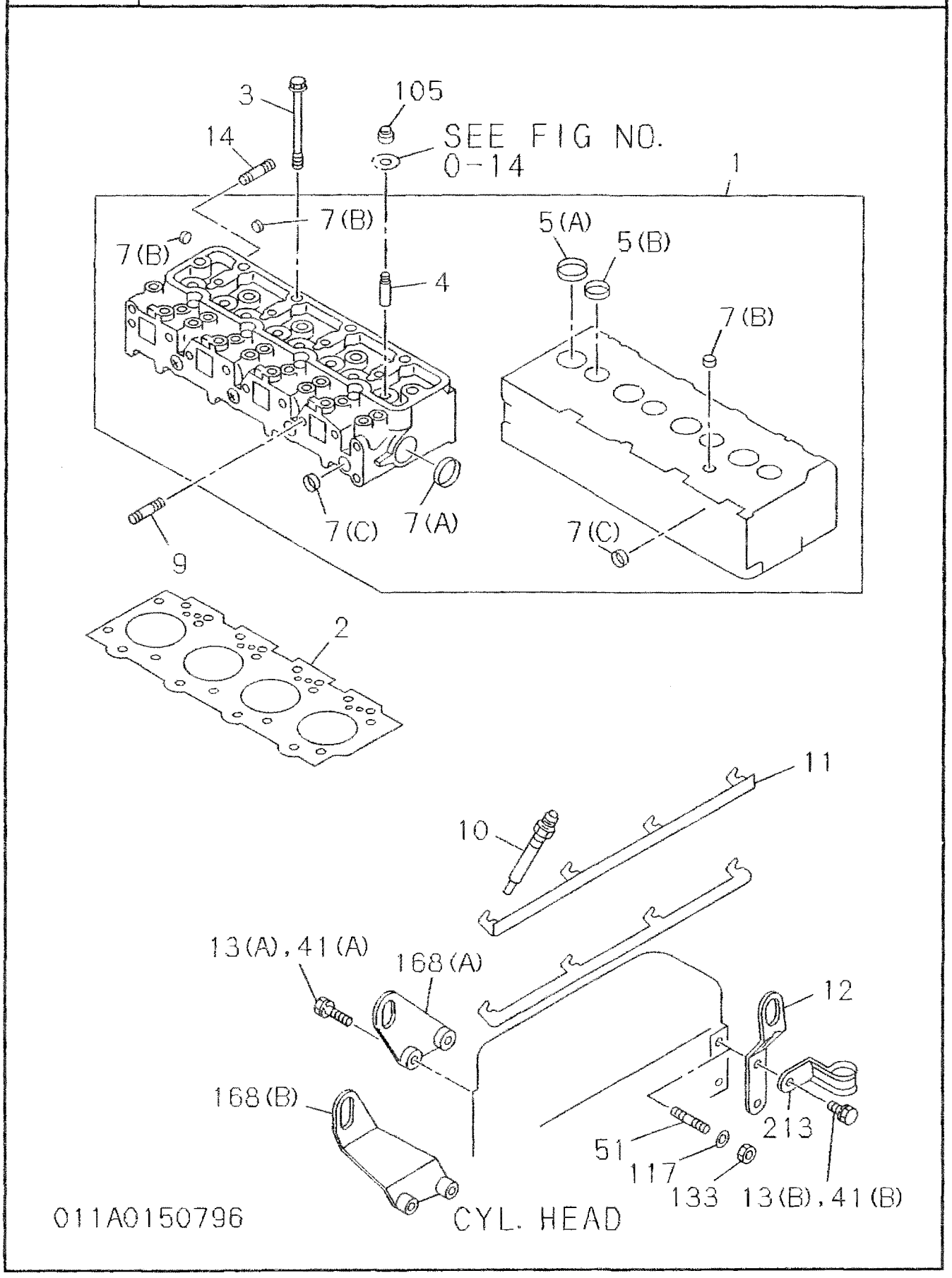

CYLINDER HEAD

0-11 A FIG-NO.

KEY. NO	PART NAME / PART NUMBER	ITC	APPLIED DATE	LR	QTY	4JB1 PPPPP AAAAA 0000 1234 ABCDE	PPPPP AAAAA 00001 56892 FGHIJ	PPPPP AAAAA 11111 33456 U G KLMNO	PPPPP AAAAA 11122 78901 PQRST	PPPP ABBB 2 00 2 23 UVWXY	PPPPP DDFHK 0 1 ZABCD	PPPPP KKKKK 0000L 1234 EFGHI	PPPPP KLLLL L U00 0 G11 1 U G JKLMN	PPPPP LLNNN 00 00 22 11 U U F G OPQRS	TUVWX	Remarks
1	HEAD ASM; CYL															
	894431-5230		9503-		1	ABCDE	GHIJ	MNO	PQRST	UVWX	ZAB D	EFGHI	JKLMN	OP		
	894327-2690		9503-		1		F	KL								
	894431-5200		9503-		1						C			QRS		
2	GASKET; CYL HD									--ALSO INCLUDED IN GASKET SET(ENGINE)						
	894332-3270		9503-		1	ABCDE	FGHIJ	KLMNO	PQRST	UVWX	ZABCD	EFGHI	JKLMN	OPQRS		T=1.65 2-NOTCH
3	BOLT; CYL HD TO BLOCK															
	894247-3551		9503-		18	ABCDE	FGHIJ	KLMNO	PQRST	UVWX	ZABCD	EFGHI	JKLMN	OPQRS		M11X122
4	GUIDE; VLV															
	511721-0160		9503-		8	ABCDE	FGHIJ	KLMNO	PQRST	UVWX	ZABCD	EFGHI	JKLMN	OPQRS		
5	SEAT; VLV INSERT															
(A)	894130-5580		9503-		4	ABCDE	FGHIJ	KLMNO	PQRST	UVWX	ZAB D	EFGHI	JKLMN	OP		INLET
(A)	894431-5210		9503-		4						C			QRS		INLET
(B)	894130-5590		9503-		4	ABCDE	FGHIJ	KLMNO	PQRST	UVWX	ZAB D	EFGHI	JKLMN	OP		EXHAUST
(B)	894431-5220		9503-		4						C			QRS		EXHAUST
7	CUP; SEALING, CYL HEAD															
(A)	109600-0051		9503-		1	ABCDE	FGHIJ	KLMNO	PQRST	UVWX	ZABCD	EFGHI	JKLMN	OPQRS		OD=45
(B)	511129-0060		9503-		3	ABCDE	FGHIJ	KLMNO	PQRST	UVWX	ZABCD	EFGHI	JKLMN	OPQRS		OD=16
(C)	109600-0112		9503-		7	ABCDE	GHIJ	MNO	PQRST	UVWX	ZABCD	EFGHI	JKLMN	OPQRS		OD=22
(C)	109600-0112		9503-		6		F	KL								OD=22
(B)	509600-0130		9503-		5	ABCDE	FGHIJ	KLMNO	PQRST	UVWX	ZABCD	EFGHI	JKLMN	OPQRS		OD=12.3
9	STUD; INL MANIF															
	904110-8250		9503-		2	ABCDE	GHIJ	MNO	PQRST	UVWX	ZABCD	EFGHI	JKLMN	OPQRS		M8X25 L=37
	904110-8250		9503-		1		F	KL								M8X25 L=37
	909630-0341		9503-		1		F	KL								M8X35 L=46
10	PLUG; GLOW															
	581410-0235		9503-		4	AB	J	NO	P S	UV		F HI		OP		10.5V
	982513-9289		9503-		4	CDE	I	KLM	R		ZA C		MN			
	894133-7597		9503-		4		FGH		Q	WX			KL	QRS		JKC
	897047-6040		9503-		4				T							
	894135-3774		9503-		4						B					SILVER
	894140-1155		9503-		4						D	E G				
	897073-6410		9503-		4								J			
11	CONNECTOR; GLOW PLUG															
	894153-7231		9503-		1	ABCDE	FGHIJ	KLMNO	PQRST	UVWX	ZABCD	EFGHI	JKLMN	OPQRS		
	894133-7600	A	9503-9503		1						D	EF				T=1.0
12	HANGER; ENG, RR															
	894174-6120		9503-		1	ABCDE	FGHIJ	KLMNO	PQRST	UV	ZABCD	EFGHI	JKLMN	OPQRS		
	897018-5340		9503-		1					WX						
13	BOLT; HANGER															
(A)	050041-0280	A	9503-9804		1	ABCDE	FGHIJ	KLMNO	PQRST	UVWX	ZABCD	EFG I	KLMN	OPQRS		M10X28 W/LK WASHER
(A)	028681-0300		9805-		1	ABCDE	FGHIJ	KLMNO	PQRST	UVWX	ZABCD	EFGHI	KLMN	OPQRS		M10X28
(A)	509030-0291	A	9503-9804		2						Z					M8X48

0-11 A CYLINDER HEAD

FIG-NO.

KEY NO	PART NAME / PART NUMBER	I T C	APPLIED DATE	L R	QTY	4JB1										Remarks
						PPPPP AAAAA 0000 1234 ABCDE	PPPPP AAAAA 00001 56892 FGHIJ	PPPPP AAAAA 11111 33456 U G KLMNO	PPPPP AAAAA 11122 78901 PQRST	PPPP ABBB 2 00 2 23 UVWXY	PPPPP DDFHK 0 1 ZABCD	PPPPP KKKKK 0000L 1234 EFGHI	PPPPP KLLLL L U00 0 G11 1 U G JKLMN	PPPPP LLNNN 00 00 22 11 U U F G OPQRS	TUVWX	
13	BOLT; HANGER															
(A)	028080-8450		9805-		2						Z					M8X48
(A)	050040-8350	A	9503-9804		1						B		JKLMN	OP		M8X35 W/LK WASHER
(A)	028080-8350		9805-		1						B		JKLMN	OP		M8X35
(B)	050040-8180	A	9503-9804		2	ABCDE	FGHIJ	KLMNO	PQRST	UVWX	ZABCD	EFG I	J	QRS		M8X18 W/LK WASHER
(B)	028080-8200		9805-		2	ABCDE	FGHIJ	KLMNO	PQRST	UVWX	ZABCD	EFGHI	J	QRS		M8X18
(A)	028680-8250		9805-		1	ABCDE	FGHIJ	KLMNO	PQRST	UVWX	ZABCD	EFGHI	JKLMN	OPQRS		M8X25
(A)	050040-8250	A	9503-9804		1	ABCDE	FGHIJ	KLMNO	PQRST	UVWX	ZABCD	EFG I	JKLMN	OPQRS		M8X25 W/LK WASHER
14	STUD; EXH MANIF															
	904110-8350		9503-		2	ABCDE	FGHIJ	KLMNO	PQRST	U WX	ZABCD	EFGHI	JKLMN	OPQRS		M8X35 L=47
	894171-9900		9503-		4					V						
105	SEAL; OIL VLV STEM					—ALSO INCLUDED IN GASKET SET(ENGINE)										
	512569-0060	A	9503-9511		8	ABCDE	FGHIJ	KLMNO	PQRST	UVWX	ZABCD	EFG I	JKLMN	OPQRS		
	897120-3070		9612-		8	ABCDE	FGHIJ	KLMNO	PQRST	UVWX	ZABCD	EFGHI	JKLMN	OPQRS		
168	HANGER; ENG. FRT															
(A)	894379-7141		9503-		1	ABCDE	FGHIJ	KLMNO	PQRST	U	ZA D	EFGH		QRS		
(A)	894133-4840		9503-		1					V						
(A)	894408-2060		9503-		1					WX	B	I	JKLMN	OP		
(B)	894440-4290		9503-		1						C					
213	CLIP; RUBBER HOSE															
	909716-2450		9503-		1	C										

CYLINDER HEAD

FIG-NO. 0-11 B

KEY NO	PART NAME / PART NUMBER	ITC	APPLIED DATE	L R	QTY	4JB1 (ABCDE FGHIJ KLMNO PQRST UVWXY)	A-4JB1 (ZABCD EFGHI JKLMN OPQRS TUVWX)	Remarks
1	HEAD ASM: CYL							
	894431-5230		9503-		1	ABCDE FGHIJ K MNO P	ZABCD EFGHI JKLMN OPQRS T	
	894327-2690		9503-		1	L		
	894343-2900		9503-		1	RST UV		
	894431-5200		9503-		1	W		
2	GASKET: CYL HD					--ALSO INCLUDED IN GASKET SET(ENGINE)		
	894332-3270		9503-		1	ABCDE FGHIJ KLMNO P RST UVW	ZABCD EFGHI JKLMN OPQRS T	T=1.65 2-NOTCH
3	BOLT: CYL HD TO BLOCK							
	894247-3551		9503-		18	ABCDE FGHIJ KLMNO P RST	ZABCD EFGHI JKLMN OPQRS T	M11X122
	894455-6670		9503-		18	UVW		M11X122
4	GUIDE: VLV							
	511721-0160		9503-		8	ABCDE FGHIJ KLMNO P RST UVW	ZABCD EFGHI JKLMN OPQRS T	
5	SEAT: VLV INSERT							
(A)	894130-5580		9503-		4	ABCDE FGHIJ KLMNO P	ZABCD EFGHI JKLMN OPQRS T	INLET
(A)	894431-5210		9503-		4	RST UVW		INLET
(B)	894130-5590		9503-		4	ABCDE FGHIJ KLMNO P	ZABCD EFGHI JKLMN OPQRS T	EXHAUST
(B)	894431-5220		9503-		4	RST UVW		EXHAUST
7	CUP: SEALING, CYL HEAD							
(A)	109600-0051		9503-		1	ABCDE FGHIJ KLMNO P RST UVW	ZABCD EFGHI JKLMN OPQRS T	OD=45
(A)	511219-0150		9503-		2	W		OD=32
(B)	511129-0060		9503-		3	ABCDE FGHIJ KLMNO P RST UVW	ZABCD EFGHI JKLMN OPQRS T	OD=16
(C)	109600-0112		9503-		7	ABCDE FGHIJ K MNO P W	ZABCD EFGHI JKLMN OPQRS T	OD=22
(C)	109600-0112		9503-		6	L RST UV		OD=22
(B)	509600-0130		9503-		5	ABCDE FGHIJ KLMNO P RST UVW	ZABCD EFGHI JKLMN OPQRS T	OD=12.3
9	STUD: INL MANIF							
	904110-8250		9503-		2	ABCDE FGHIJ KLMNO P W	ZABCD EFGHI JKLMN OPQRS T	M8X25 L=37
	904110-8250		9503-		1	RST UV		M8X25 L=37
	909630-0341		9704-		1	UV		M8X25 L=37
	904110-8350		9503-		1	RST UV		M8X35 L=47
10	PLUG: GLOW							
	982513-9289		9503-		4	ABCDE	Z D GHI L OPQRS T	
	581410-0235		9503-		4	FGHIJ KLMNO P UVW	E J	10.5V
	894133-7597		9503-		4	RST	C	JKC
	897073-6410		9503-		4		A F K MN	
	897047-6040		9503-		4		B	
11	CONNECTOR: GLOW PLUG							
	894153-7231		9503-		1	ABCDE FGHIJ KLMNO P RST UVW	ZABCD EFGHI JKLMN OPQRS T	
12	HANGER: ENG. RR							
	894174-6120		9503-		1	ABCDE FGHIJ KLMNO P UVW	ZABCD EFGHI JKLMN OPQRS T	
	897018-5340		9503-		1	RST		
13	BOLT: HANGER							
(A)	050041-0280	A	9503-9804		1	AB DE FG IJ KLM OP T	ZABCD EFG Q S	M10X28 W/LK WASHER
(A)	028681-0300		9805-		1	AB DE FGHIJ KLM OP T UV	ZABCD EFGHI J LMN OPQ S T	M10X28

0-11 B CYLINDER HEAD

FIG-NO.

KEY NO — PART NAME

KEY NO	PART NAME / PART NUMBER	ITC	APPLIED DATE	LR	QTY	4JB1 (A B C D E F G H I J K L M N O P Q R S T U V W X Y)	A-4JB1 (Z A B C D E F G H I J K L M N O P Q R S T U V W X)	Remarks
13	BOLT; HANGER							
(A)	028680-8250		9805-		1	AB DEFGHIJKLM OP	ZABCDEFGHIJ LMNOPQ ST	M8X25
(A)	050040-8250	A	9503-9804		1	AB DEFG IJKLM OP	ZABCDEFG Q S	M8X25 W/LK WASHER
(A)	050041-0350	A	9503-9804		1	C N RS W	R	M10X35 W/LK WASHER
(A)	028681-0400		9805-		1	C N RS W	K R	M10X35
(A)	050040-8350	A	9503-9804		1	C N RS W	R	M8X35 W/LK WASHER
(A)	028680-8350		9805-		1	C N RS W	K R	M8X35
(B)	050040-8180	A	9503-9804		2	ABCDEFG IJKLMNOP RST	ZABC EFG QRS	M8X18 W/LK WASHER
(B)	028680-8200		9805-		2	ABCDEFGHIJKLMNOP RSTUV	ZABC EFGHIJK MNOPQRST	M8X18
14	STUD; EXH MANIF							
	904110-8350		9503-		2	ABCDEFGHIJKLMNOP RST W	ZABCDEFGHIJKLMNOPQRST	M8X35 L=47
41	BOLT; ENG HANGER							
(A)	050040-8250	A	9503-9804		1	T		M8X25 W/LK WASHER
(A)	028680-8250		9805-		1	T		M8X25
(B)	050040-8200	A	9503-9804		1	W		M8X20 W/LK WASHER
(B)	028080-8200		9805-		1	W		M8X20
(B)	050040-8250	A	9503-9804		1	W		M8X25 W/LK WASHER
(B)	028680-8250		9805-		1	W		M8X25
51	STUD; HANGER							
	904110-8450		9805-		2		R T	
105	SEAL; OIL VLV STEM — --ALSO INCLUDED IN GASKET SET(ENGINE)							
	512569-0060	A	9503-9611		8	ABCDEFG IJKLMNOP RST W	ZABCDE QRS	
	897120-3070		9612-		8	ABCDEFGHIJKLMNOP RSTUVW	ZABCDEFGHIJKLMNOPQRST	
117	WASHER; LK, HANGER							
	909150-5080		9805-		2		R T	
133	NUT; HANGER							
	909110-4080		9805-		2		R T	
168	HANGER; ENG, FRT							
(A)	894379-7141		9503-		1	AB DEFGHIJKLM OP UV	ZABCDEFGHIJ LMNOPQ ST	
(A)	894408-2060		9503-		1	C N RST	K R	
(B)	897017-9170		9503-		1	W		
213	GASKET; NIPPLE, OIL FEED							
	909716-2450		9503-		1	AB		

MEMO

0-12	CYLINDER BLOCK
FIG-NO.	

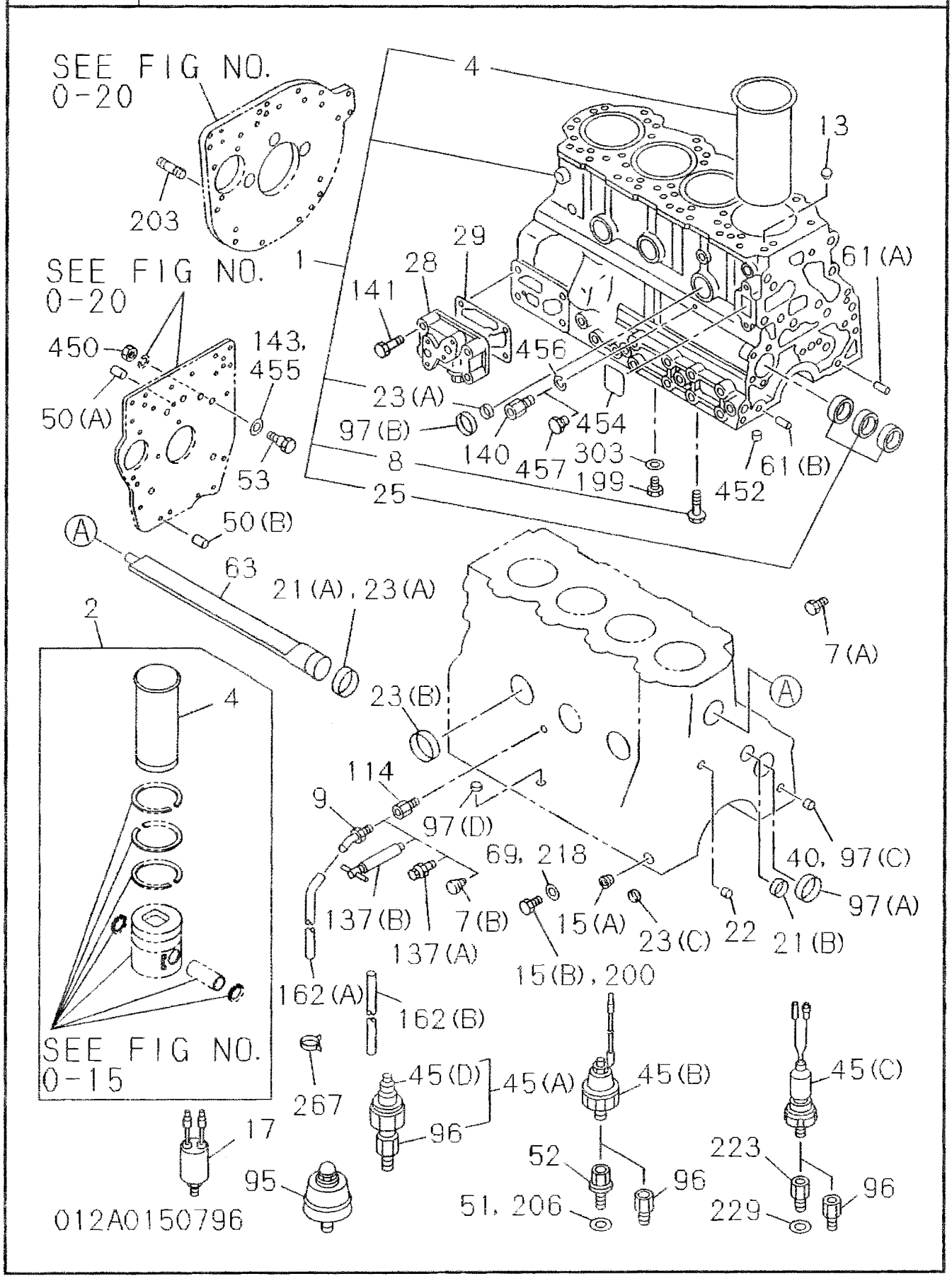

CYLINDER BLOCK

0-12 A
FIG-NO.

KEY NO | PART NAME

4JB1

KEY NO	PART NUMBER	ITC	APPLIED DATE	LR	QTY	PA / PA01 / PA02 / PA03 / PA04	PA05 / PA06 / PA08 / PA09 / PA12	PA13 / PA13UG / PA14 / PA15 / PA16	PA17 / PA18 / PA19 / PA20 / PA21	PA22 / PB / PB02 / PB03 / –	PD / PD01 / PF / PH / PK	PK01 / PK02 / PK03 / PK04 / PKL	PKL01 / PL / PLUG / PL01 / PL01UG	PL02 / PL02UF / PN / PN01 / PN01UG	–	Remarks
						A B C D E	F G H I J	K L M N O	P Q R S T	U V W X Y	Z A B C D	E F G H I	J K L M N	O P Q R S	T U V W X	
1	BLOCK ASM; CYL															
	894437-3976		9503-		1	ABCDE	FGHIJ	KLMNO	PQRST	UVWX	ZABCD	EFGHI	JKLMN	OPQRS		
2	LINER SET; ENG CYL															
	587813-1770		9503-		4	ABCDE	FGHIJ	KLMNO	PQRST	UVWX	ZABCD	EFGHI	JKLMN	OPQRS		GRADE=1
	587813-1780		9503-		4	ABCDE	FGHIJ	KLMNO	PQRST	UVWX	ZABCD	EFGHI	JKLMN	OPQRS		GRADE=2
	587813-1790		9503-		4	ABCDE	FGHIJ	KLMNO	PQRST	UVWX	ZABCD	EFGHI	JKLMN	OPQRS		GRADE=3
	587813-1800		9503-		4	ABCDE	FGHIJ	KLMNO	PQRST	UVWX	ZABCD	EFGHI	JKLMN	OPQRS		GRADE=4
4	LINER; C/BL															
	897176-6830		9503-		4	ABCDE	FGHIJ	KLMNO	PQRST	UVWX	ZABCD	EFGHI	JKLMN	OPQRS		OD GRD=1, ID GRD=AX
	897176-6840		9503-		4	ABCDE	FGHIJ	KLMNO	PQRST	UVWX	ZABCD	EFGHI	JKLMN	OPQRS		OD GRD=1, ID GRD=CX
	897176-6850		9503-		4	ABCDE	FGHIJ	KLMNO	PQRST	UVWX	ZABCD	EFGHI	JKLMN	OPQRS		OD GRD=2, ID GRD=AX
	897176-6860		9503-		4	ABCDE	FGHIJ	KLMNO	PQRST	UVWX	ZABCD	EFGHI	JKLMN	OPQRS		OD GRD=2 ID GRD=CX
	897176-6870		9503-		4	ABCDE	FGHIJ	KLMNO	PQRST	UVWX	ZABCD	EFGHI	JKLMN	OPQRS		OD GRD=3, ID GRD=AX
	897176-6880		9503-		4	ABCDE	FGHIJ	KLMNO	PQRST	UVWX	ZABCD	EFGHI	JKLMN	OPQRS		OD GRD=3, ID GRD=CX
	897176-6890		9503-		4	ABCDE	FGHIJ	KLMNO	PQRST	UVWX	ZABCD	EFGHI	JKLMN	OPQRS		OD GRD=4, ID GRD=AX
	897176-6900		9503-		4	ABCDE	FGHIJ	KLMNO	PQRST	UVWX	ZABCD	EFGHI	JKLMN	OPQRS		OD GRD=4, ID GRD=CX
7	PLUG; WATER DRAIN															
(A)	909664-0010		9503-		1	ABCDE	FGHIJ	KLMNO	PQRST	UVWX	ZABCD	EFGHI	JKLMN	OPQRS		PT1/4
8	BOLT; BRG CAP															
	894432-6420		9503-		10	ABCDE	FGHIJ	KLMNO	PQRST	UVWX	ZABCD	EFGHI	JKLMN	OPQRS		M14X89 FLANGE
9	PIPE ASM; WATER DRAIN COCK															
	894178-1530		9503-		1					V						
	513721-0431		9503-		1					WX						
13	DOWEL; C/BL TO HD															
	894453-3440		9503-		2	ABCDE	FGHIJ	KLMNO	PQRST	UVWX	ZABCD	EFGHI	JKLMN	OPQRS		
15	PLUG; OIL GALLERY															
(A)	509605-0192		9503-		1	ABCD	FGHIJ	KLMNO	PQRST	UVWX	ABC	I	JKLMN	OP		PT1/8
(A)	509605-0192	A	9503-9704		2						D	EFG				PT1/8
(A)	509605-0192		9705-		3						D	EFGH				PT1/8
(A)	509605-0192		9503-		3						Z			QRS		PT1/8
(B)	999202-3140		9503-		1	ABCDE	FGHIJ	KLMNO	PQRST	UVWX	BCD	EFGH	KL	OPQRS		M14X9
17	SWITCH; OIL PRESSURE															
	894417-8310		9503-		1					V						
	182410-0912		9503-		1						C					PT1/8
21	CUP; SEALING, RR															
(A)	511219-0180		9503-		1	ABCDE	FGHIJ	KLMNO	PQRST	UVWX	ZABCD	EFGHI	JKLMN	OPQRS		OD=36
(B)	511219-0170		9503-		1	ABCDE	FGHIJ	KLMNO	PQRST	UVWX	ZABCD	EFGHI	JKLMN	OPQRS		OD=38
22	CUP; SEALING, DUCT HOLE															
	509600-0130		9503-		1	ABCDE	FGHIJ	KLMNO	PQRST	UVWX	ZABCD	EFGHI	JKLMN	OPQRS		OD=12.3
23	CUP; SEALING, C/BL FRT & RR															
(A)	511219-0080		9503-		3	ABCDE	FGHIJ	KLMNO	PQRST	UVWX	ZABCD	EFGHI	JKLMN	OPQRS		OD=18
(B)	109600-0051		9503-		3	ABCDE	FGHIJ	KLMNO	PQRST	UVWX	ZABCD	EFGHI	JKLMN	OPQRS		OD=45

0-12 A CYLINDER BLOCK

FIG-NO.

KEY NO | PART NAME

4JB1

KEY NO	PART NUMBER	ITC	APPLIED DATE	LR	QTY	4JB1 (ABCDEFGHIJKLMNOPQRSTUVWXYZABCDEFGHIJKLMNOPQRSTUVWX)	Remarks
23	CUP; SEALING, C/BL FRT & RR						
(C)	511219-0150		9503-		2	ABCDEFGHIJKLMNOPQRSTUVWX ZABCDEFGHIJKLMNOPQRS	OD=32
25	METAL; CM/SHF						
	894168-5561		9503-		1	ABCDEFGHIJKLMNOPQRSTUVWX ZABCDEFGHIJKLMNOPQRS	
28	COVER; OIL PORT						
	894380-1960		9503-		1	G	
29	GASKET; COVER, OIL PORT						
	894470-6750	C	9403-9403		1	G	
	897111-8161		9404-		1	G	
45	SWITCH; OIL PRESSURE						
(A)	582410-0122		9503-		1	ABCDEFGHIJ MNOPQ ST V B	
(A)	583151-0030		9503-		1	R	
(A)	182410-0082		9503-		1	ABCDEFGHIJ MNOPQ ST V B DE IJ QRS	
(A)	982720-0690		9503-		1	KL R U A F KL OP	
(B)	182410-0330		9503-		1	WX	
(C)	582410-0361		9503-		1	Z	
(C)	582410-0320		9503-		1	MN	
(C)	182410-0912		9503-		1	C	
50	PIN; STRAIGHT, RR PLATE						
(A)	908161-0320		9503-		1	ABCDE GHIJKLMNOPQRSTUVWX ZABCDEF H KLMNOPQRS	OD=10 L=32
(A)	908151-0240		9503-		1	FG	
(A)	908161-0200		9503-		1	G IJ	OD=10 L=20
(B)	908151-2220		9503-		2	V	
(B)	908161-0220		9503-		2	WX	
51	GASKET; OIL PRESS WARNING SW, C/BL					--ALSO INCLUDED IN GASKET SET(ENGINE)	
	894336-2920		9503-		1	DEFGH QRS	
52	NIPPLE; OIL PRESS WARNING SW, C/BL						
	894167-7492		9503-		1	DEFG QRS	
53	BOLT; REAMER						
	909606-5350		9503-		1	ABCDE HIJKLMNOPQRSTU WX ZA C F H KL Q	
	989112-9110		9503-		1	FG IJ	
	909806-0200		9503-		1	MN RS	M10X52
	894171-9431		9503-		1	V OP	
	894369-9070		9503-		1	B	
61	PIN; STRAIGHT						
(A)	908151-0200		9503-		2	ABCDEFGHIJKLMNOPQRSTU ZA CDEFGHIJ QRS	OD=10 L=20
(A)	908151-0200		9503-		1	VWX KL OP	OD=10 L=20
(B)	908151-0500		9503-		1	VWX KL OP	OD=10 L=50
(B)	908151-0500		9503-		2	B MN	OD=10 L=50
63	DUCT; WATER, C/BL						
	894471-3581		9503-		1	ABCDEFGHIJKLMNOPQRSTUVWX ZABCDEFGH JKLMNOPQRS	
	894419-4361		9503-		1	I	
69	GASKET; PLUG, OIL GALLERY, C/BL					--ALSO INCLUDED IN GASKET SET(ENGINE)	
	909571-4140		9503-		1	ABCDEFGHIJKLMNOPQRSTUVWX ZABCDEFGH KL OPQRS	ID=14.2 OD=20.0

CYLINDER BLOCK

0-12 A

FIG-NO.

KEY NO	PART NAME / PART NUMBER	I T C	APPLIED DATE	L R	QTY	4JB1 PPPPP AAAAA 0000 1234 ABCDE	PPPPP AAAAA 00001 56892 FGHIJ	PPPPP AAAAA 11111 33456 U G KLMNO	PPPPP AAAAA 11122 78901 PQRST	PPPP ABBB 2 00 2 23 UVWXY	PPPPP DDFHK 0 1 ZABCD	PPPPP KKKKK 0000L 1234 EFGHI	PPPPP KLLLL L U00 0 G11 I U G JKLMN	PPPPP LLNNN 00 00 22 11 U U F G OPQRS	TUVWX	Remarks
95	UNIT: OIL PRESSURE															
	983140-1570		9503-9603		1				P							
	983140-1570		9503-		1	E										
	183150-0620		9503-		1						A		MN			
96	ADAPTER: PRESS UNIT & SW															
	909902-2380		9503-		1	ABCDE	FGHIJ	MNO	QRST	V	AB		KL			
	909902-2380		9408-9408		1				P							
	909902-3040		9409-		1				P							
97	CUP: SEALING															
(A)	894250-5140		9503-		1	ABCDE	FGHIJ	KLMNO	PQRST	UVWX	ZABCD	EFGHI	JKLMN	OPQRS		OD=56
(B)	511219-0180		9503-		3	ABCDE	FGHIJ	KLMNO	PQRST	UVWX	ZABCD	EFGHI	JKLMN	OPQRS		OD=36
(C)	511129-0060		9503-		2	ABCDE	FGHIJ	KLMNO	PQRST	UVWX	ZABCD	EFGHI	JKLMN	OPQRS		OD=16
(D)	511129-0030		9503-		1	ABCDE	FGHIJ	KLMNO	PQRST	UVWX	ZABCD	EFGHI	JKLMN	OPQRS		OD=15.6
114	NIPPLE: WATER DRAIN															
	894177-8900		9503-		1						ZA					
137	COCK: DRAIN, WATER															
(A)	894422-6000		9503-		1	ABC	F		S	U	C		KLMN	OP		
(B)	894429-4210		9503-		1	DE	HI	KLM	PQR		ZA	G				
(A)	894422-6000		9503-		1		G J	NO			B					
140	NIPPLE: INJ PUMP															
	894130-0211		9503-		1	ABCDE	FGHIJ	KLMNO	PQRST	UVWX	ZABC		KLMN	OP		
	894146-5820		9405-9405		1	ABCDE	FGHIJ	KLMNO	PQRST		ZA CD	EFG I	J	QRS		M8X25
	894454-1990		9406-		1	ABCDE	FGHIJ	KLMNO	PQRST	U	ZA CD	EFGHI	J	QRS		M8X23
	894171-9440		9503-		1					WX			KL	OP		
	894171-9440		9503-		2						B		MN			
141	BOLT: COVER															
	028680-8400		9503-		4							G				
143	WASHER: LK															
	909150-8100		9503-		2					VWX						ID=10
162	HOSE: WATER DRAIN, C/BL															
(A)	909914-5330		9503-		1					V						L=550
(B)	909913-8340		9503-		1	DE	HI	KLM	PQR T							L=520
199	PLUG: OIL JET HOLE, C/BL															
	999202-3160		9503-		1	ABCDE	FGHIJ	KLMNO	PQRST	UVWX	ZABC	I	JKLMN	OPQRS		M16X12
	909661-0050		9503-		1						D	EFGH				M16X8 PLUG
203	STUD: C/BL															
	894411-0010		9503-		3					WX						
223	CONNECTOR: OIL PRESSURE															
	894425-4500		9503-		1						ZA	I	J MN			
229	GASKET: CONNECTOR															
	909571-4140		9503-		1						ZA	I	J MN			ID=14.2 OD=20.0

0-12 A	CYLINDER BLOCK
FIG-NO.	

KEY NO	PART NAME / PART NUMBER	ITC	APPLIED DATE	LR	QTY	4JB1 ABCDE	FGHIJ	KLMNO	PQRST	UVWXY	ZABCD	EFGHI	JKLMN	OPQRS	TUVWX	Remarks
						PA PA01 PA02 PA03 PA04	PA05 PA06 PA08 PA09 PA12	PA13 PA13UG PA14 PA15 PA16	PA17 PA18 PA19 PA20 PA21	PA22 PB PB02 PB03	PD PD01 PF PH PK	PK01 PK02 PK03 PK04 PKL	PKL01 PL PLUG PL01 PL01UG	PL02 PL02UF PN PN01 PN01UG		
267	CLIP: DRAIN HOSE															
	894403-6900		9503-		1	DE	HI	KLM	PQR T							ID=9.5
303	GASKET: PLUG --ALSO INCLUDED IN GASKET SET(ENGINE)															
	909571-4160		9503-		1	ABCDE	FGHIJ	KLMNO	PQRST	UVWX	ZABC	I	JKLMN	OPQRS		
450	NUT: REAMER BOLT															
	909110-4100		9503-		1	ABCDE	FGHIJ	KLMNO	PQRST	UVWX	ZABC	F I	KL	OPQ		M10
	909111-5100		9705-		1							H				M10
452	PIN: C/BL TO OIL PAN															
	909878-5970		9503-		2	ABCDE	GHIJ	KLMNO	PQRST	UVWX	ZABCD	EFGHI	JKLMN	OPQRS		
454	SEAL: C/BL															
	897016-4730		9503-		1					VWX	B	I	JKLMN	OP		
455	GASKET: REAMER BOLT															
	909561-2120		9503-		1						B	I				
456	GASKET: NIPPLE --ALSO INCLUDED IN GASKET SET(ENGINE)															
	909572-0080		9503-		1	ABCDE	FGHIJ	KLMNO	PQRST	UVWX	ZABC		JKLMN	OP		ID=8.2 OD=17

CYLINDER BLOCK

0-12 B

FIG-NO.

KEY NO	PART NUMBER	ITC	APPLIED DATE	LR	QTY	4JB1					A-4JB1					Remarks
						PPPPP	PPPPP	PPPPP	P PPT	TTT	PPPPP	PPPPP	PPPPP	PPPPP	P	
						YYYYY	VVVWW	WWWWW	W TTP	PPP	AAAAA	AAAAA	AAAAA	AAYYY	Y	
						0000	00 0	00000	0 QQB	KKX	AAAAA	AAAAA	AAAAA	AWAAA	A	
						1234	12 2	34678	9 0	0	0000	00000	11111	10 00	0	
									1	1	1234	56789	01234	51 12	3	
						ABCDE	FGHIJ	KLMNO	PQRST	UVWXY	ZABCD	EFGHI	JKLMN	OPQRS	TUVWX	
1	BLOCK ASM; CYL															
	894437-3976		9503-		1	ABCDE	FGHIJ	KLMNO	P RST	UVW	ZABCD	EFGHI	JKLMN	OPQRS	T	
2	LINER SET; ENG CYL															
	587813-1770		9503-		4	ABCDE	FGHIJ	KLMNO	P							GRADE=1
	587813-1780		9503-		4	ABCDE	FGHIJ	KLMNO	P							GRADE=2
	587813-1790		9503-		4	ABCDE	FGHIJ	KLMNO	P							GRADE=3
	587813-1800		9503-		4	ABCDE	FGHIJ	KLMNO	P							GRADE=4
	587813-2880		9503-		4				RST	UVW						GRADE=1
	587813-2890		9503-		4				RST	UVW						GRADE=2
	587813-2900		9503-		4				RST	UVW						GRADE=3
	587813-2910		9503-		4				RST	UVW						GRADE=4
	587813-3120		9503-		4						ZABCD	EFGHI	JKLMN	OPQRS	T	GRADE=1
	587813-3130		9503-		4						ZABCD	EFGHI	JKLMN	OPQRS	T	GRADE=2
	587813-3140		9503-		4						ZABCD	EFGHI	JKLMN	OPQRS	T	GRADE=3
	587813-3150		9503-		4						ZABCD	EFGHI	JKLMN	OPQRS	T	GRADE=4
4	LINER; C/BL									—*ALSO INCLUDED IN LINER SET*						
	897176-6830		9503-		4	ABCDE	FGHIJ	KLMNO	P RST	UVW	ZABCD	EFGHI	JKLMN	OPQRS	T	OD GRD=1, ID GRD=AX
	897176-6840		9503-		4	ABCDE	FGHIJ	KLMNO	P RST	UVW	ZABCD	EFGHI	JKLMN	OPQRS	T	OD GRD=1, ID GRD=CX
	897176-6850		9503-		4	ABCDE	FGHIJ	KLMNO	P RST	UVW	ZABCD	EFGHI	JKLMN	OPQRS	T	OD GRD=2, ID GRD=AX
	897176-6860		9503-		4	ABCDE	FGHIJ	KLMNO	P RST	UVW	ZABCD	EFGHI	JKLMN	OPQRS	T	OD GRD=2, ID GRD=CX
	897176-6870		9503-		4	ABCDE	FGHIJ	KLMNO	P RST	UVW	ZABCD	EFGHI	JKLMN	OPQRS	T	OD GRD=3, ID GRD=AX
	897176-6880		9503-		4	ABCDE	FGHIJ	KLMNO	P RST	UVW	ZABCD	EFGHI	JKLMN	OPQRS	T	OD GRD=3, ID GRD=CX
	897176-6890		9503-		4	ABCDE	FGHIJ	KLMNO	P RST	UVW	ZABCD	EFGHI	JKLMN	OPQRS	T	OD GRD=4, ID GRD=AX
	897176-6900		9503-		4	ABCDE	FGHIJ	KLMNO	P RST	UVW	ZABCD	EFGHI	JKLMN	OPQRS	T	OD GRD=4, ID GRD=CX
7	PLUG; WATER DRAIN															
(A)	909664-0010		9503-		1	ABCDE	FGHIJ	KLMNO	P RST	UVW	ZABCD	EFGHI	JKLMN	OPQRS	T	PT1/4
(B)	909664-0010		9506-		1	ABCDE										PT1/4
(B)	909664-0010		9503-		1		FGHIJ	KLM O	P	UVW	ZABCD	EFGHI	KLMN	PQRS	T	PT1/4
8	BOLT; BRG CAP															
	894432-6420		9503-		10	ABCDE	FGHIJ	KLMNO	P RST	UVW	ZABCD	EFGHI	JKLMN	OPQRS	T	M14X89 FLANGE
9	PIPE ASM; WATER DRAIN COCK															
	894178-1530		9503-		1				RS							
	513721-0431		9503-		1				T							
13	DOWEL; C/BL TO HD															
	894453-3440		9503-		2	ABCDE	FGHIJ	KLMNO	P RST	UVW	ZABCD	EFGHI	JKLMN	OPQRS	T	
15	PLUG; OIL GALLERY															
(A)	509605-0192		9503-		2	ABCDE	FG IJ	KLMNO	P T							PT1/8
(A)	509605-0192		9503-		3		H		RS	UVW						PT1/8
(A)	109605-0500		9503-		2						ZABCD	EFGHI	JKLMN	OPQRS	T	PT1/8
17	SWITCH; OIL PRESSURE															
	582410-0160		9503-9511		1		G									
21	CUP; SEALING, RR															
(A)	511219-0180		9503-		1	ABCDE	FGHIJ	KLMNO	P RST	UVW	ZABCD	EFGHI	JKLMN	OPQRS	T	OD=36
(B)	511219-0170		9503-		1	ABCDE	FGHIJ	KLMNO	P RST	UVW	ZABCD	EFGHI	JKLMN	OPQRS	T	OD=38

0-12 B CYLINDER BLOCK

FIG-NO.

KEY NO	PART NAME / PART NUMBER	ITC	APPLIED DATE	LR	QTY	4JB1 (ABCDEFGHIJKLMNOPQRSTUVWXY)	A-4JB1 (ZABCDEFGHIJKLMNOPQRSTUVWX)	Remarks
22	CUP: SEALING.DUCT HOLE							
	509600-0130		9503-		1	ABCDE FGHIJ KLMNO P RST UVW	ZABCD EFGHI JKLMN OPQRS T	OD=12.3
23	CUP: SEALING.C/BL FRT & RR							
(A)	511219-0180		9503-		3		ZABCD EFGHI JKLMN OPQRS T	OD=36
(A)	511219-0080		9503-		3	ABCDE FGHIJ KLMNO P RST UVW	ZABCD EFGHI JKLMN OPQRS T	OD=18
(B)	109600-0051		9503-		3	ABCDE FGHIJ KLMNO P RST UVW	ZABCD EFGHI JKLMN OPQRS T	OD=45
(C)	511219-0150		9503-		2	ABCDE FGHIJ KLMNO P RST UVW	ZABCD EFGHI JKLMN OPQRS T	OD=32
25	METAL: CM/SHF							
	894168-5561		9503-		1	ABCDE FGHIJ KLMNO P RST UVW	ZABCD EFGHI JKLMN OPQRS T	
28	COVER: OIL PORT							
	894441-9490		9503-		1		D L	
29	GASKET: COVER.OIL PORT							
	897111-8161		9503-		1		D L	
40	CUP: SEALING.C/BL RR							
	511129-0060		9503-		2	AB DE FG IJ KLMNO P RST UVW	ZABCD EFGHI J LMN OPQ ST	OD=16
	511129-0060		9503-		1	C	K R	OD=16
45	SWITCH: OIL PRESSURE							
(A)	582410-0122		9503-		1	ABCDE F I KLMNO P W	ZABCD EF HI JKLMN PQRS T	
(A)	583151-0030		9503-		1	J		
(D)	982720-0690		9503-		1	H J	O	
(D)	182410-0082		9503-		1	ABCDE F I KLMNO P W	ZABCD EF HI JKLMN PQRS T	
(D)	982720-0690		9805-		1	G U		
(A)	582410-0361		9503-		1	J	G I	
(A)	582410-0361		9503-9804		1	G		
(B)	182410-0330		9503-		1	RST		
50	PIN: STRAIGHT.RR PLATE							
(A)	908161-0320		9503-		1	ABCDE FGHIJ KLMNO P RST UVW	ZABCD EFGHI JKLMN OPQRS T	OD=10 L=32
(A)	908151-0240		9503-		1		A F MN	
(B)	908161-0220		9503-		2	T		
52	NIPPLE: OIL PRESS WARNING SW.C/BL							
	894167-7492		9503-		1	RS U W		
53	BOLT: REAMER							
	909606-5350		9503-		1	ABCDE FGHIJ KLMNO P T UVW	ZABCD EFGHI J L OPQRS T	
	909806-0200		9712-		1	ABCDE FG IJ KLMNO P	K	
	989112-9110		9503-		1	RS	A F MN	
61	PIN: STRAIGHT							
(A)	908151-0200		9503-		2	AB DE FGHIJ KLM O P UVW	ZABCD EFGHI J LMN OPQRS T	OD=10 L=20
(A)	908151-0200		9503-		1	N RST		OD=10 L=20
(B)	908151-0500		9503-		2	C H	K	OD=10 L=50
(B)	908151-0500		9503-		1	N RST		OD=10 L=50
(B)	908151-0500		9503-		2		R	OD=10 L=50
63	DUCT: WATER.C/BL							
	894471-3581		9503-		1	ABCDE FGHIJ KLMNO P RST UVW	ZABCD EFGHI JKLMN OPQRS T	

CYLINDER BLOCK

0-12 B

FIG-NO.

Applicability columns: 4JB1 (A B C D E F G H I J K L M N O P Q R S T U V W X Y) and A-4JB1 (Z A B C D E F G H I J K L M N O P Q R S T U V W X).

KEY NO	PART NAME / PART NUMBER	ITC	APPLIED DATE	LR	QTY	4JB1	A-4JB1	Remarks
95	UNIT: OIL PRESSURE							
	983140-3100		9503-		1	G		
	983140-1570		9503-		1		G	
96	ADAPTER: PRESS UNIT & SW							
	909902-2380		9503-		1	ABCDE F IJ KLMNO P W	ZABCD EF HI JKLMN PQRS T	
97	CUP: SEALING							
(A)	894250-5140		9503-		1	ABCDE FGHIJ KLMNO P RST UVW	ZABCD FGHI JKLMN OPQRS T	OD=56
(B)	511219-0180		9503-		3	ABCDE FGHIJ KLMNO P RST UVW		OD=36
(D)	511129-0030		9503-		1	ABCDE FGHIJ KLMNO P RST UVW	ZABCD EFG QRS	OD=15.6
(C)	511129-0060		9705-		2	H UV		
137	COCK: DRAIN. WATER							
(A)	894422-6000		9503-		1	N	J O	
140	NIPPLE: INJ PUMP							
	894130-0211		9503-		1	ABCDE FGHIJ KLMNO P	ZABCD EFGHI JKLMN OPQRS T	
	894146-5820		9405-9405		1	AB D FG IJ KLM O W		M8X25
	894454-1990		9406-		1	AB DE FGHIJ KLM OP UVW	ZABCD EFGHI J LMN OPQ S T	M8X23
	894171-9440		9503-		2	C	K R	
	894171-9440		9503-		1	N RST		
141	BOLT: COVER							
	028080-8450		9503-		4		D L	
143	WASHER: LK							
	909150-8100		9503-		2	T		ID=10
	909150-5100		9503-		2	TUV		ID=10
149	WASHER: LK. CLIP. HARNESS							
	894422-9873		9503-		1	T		
162	HOSE: WATER DRAIN. C/BL							
(A)	909914-8830		9503-		1	T		L=250
199	PLUG: OIL JET HOLE. C/BL							
	999202-3160		9503-		1	ABCDE FGHIJ KLMNO P	ZABCD EFGHI JKLMN OPQRS T	M16X12
200	PLUG: OIL GALLERY							
	999202-3140		9503-		1	ABCDE FG I KLMNO P	ZABCD EF H JKLMN OPQRS T	M14X9
203	STUD: C/BL							
	894411-0010		9503-		3	T		
206	GASKET							
	894336-2920		9503-		1	RS UVW		
218	GASKET: PLUG. C/BL SIDE							
	909571-4140		9503-		1	ABCDE FG I KLMNO P	ZABCD EF H JKLMN OPQRS T	ID=14.2 OD=20.0
223	CONNECTOR: OIL PRESSURE							
	894425-4500		9503-		1	GH J	G I	

0-12 B CYLINDER BLOCK

FIG-NO.

KEY. NO	PART NAME / PART NUMBER	ITC	APPLIED DATE	LR	QTY	4JB1 (ABCDEFGHIJKLMNOPQRSTUVWXY)	A-4JB1 (ZABCDEFGHIJKLMNOPQRSTUVWX)	Remarks
229	GASKET: CONNECTOR							
	909571-4140		9503-		1	G H J	G I	ID=14.2 OD=20.0
303	GASKET: PLUG					--ALSO INCLUDED IN GASKET SET(ENGINE)		
	909571-4160		9503-		1	A B C D E F G H I J K L M N O P	Z A B C D E F G H I J K L M N O P Q R S T	
450	NUT: REAMER BOLT							
	909110-4100		9503-		1	A B C D E F G H I J K L M N O P R S T U V W		M10
	909111-5100		9503-		1		Z A B C D E F G H I J L M N O P Q R S T	M10
452	PIN: C/BL TO OIL PAN							
	909878-5970		9503-		2	A B C D E F G H I J K L M N O P R S T U V W	Z A B C D E F G H I J K L M N O P Q R S T	
454	SEAL: C/B							
	897016-4730		9503-		1	C N R S T	K R	
456	GASKET: NIPPLE					--ALSO INCLUDED IN GASKET SET(ENGINE)		
	909572-0080		9503-		1	A B C D E F G H I J K L M N O P R S T		ID=8.2 OD=17
457	GASKET: NIPPLE							
	909202-3080		9503-		1	R S T V		

Model codes (4JB1): PY01, PY02, PY03, PY04, PV, PV01, PV02, PW, PW, PW02, PW03, PW04, PW06, PW07, PW08, PW09, –, PTQ, PTQ01, TPB, TPK, TPK01, TPX

Model codes (A-4JB1): PAA, PAA01, PAA02, PAA03, PAA04, PAA05, PAA06, PAA07, PAA08, PAA09, PAA10, PAA11, PAA12, PAA13, PAA14, PAA15, PAW1, PYA, PYA01, PYA02, PYA03

MEMO

0-13	OIL PAN AND LEVEL GAUGE
FIG-NO.	(NO.1)

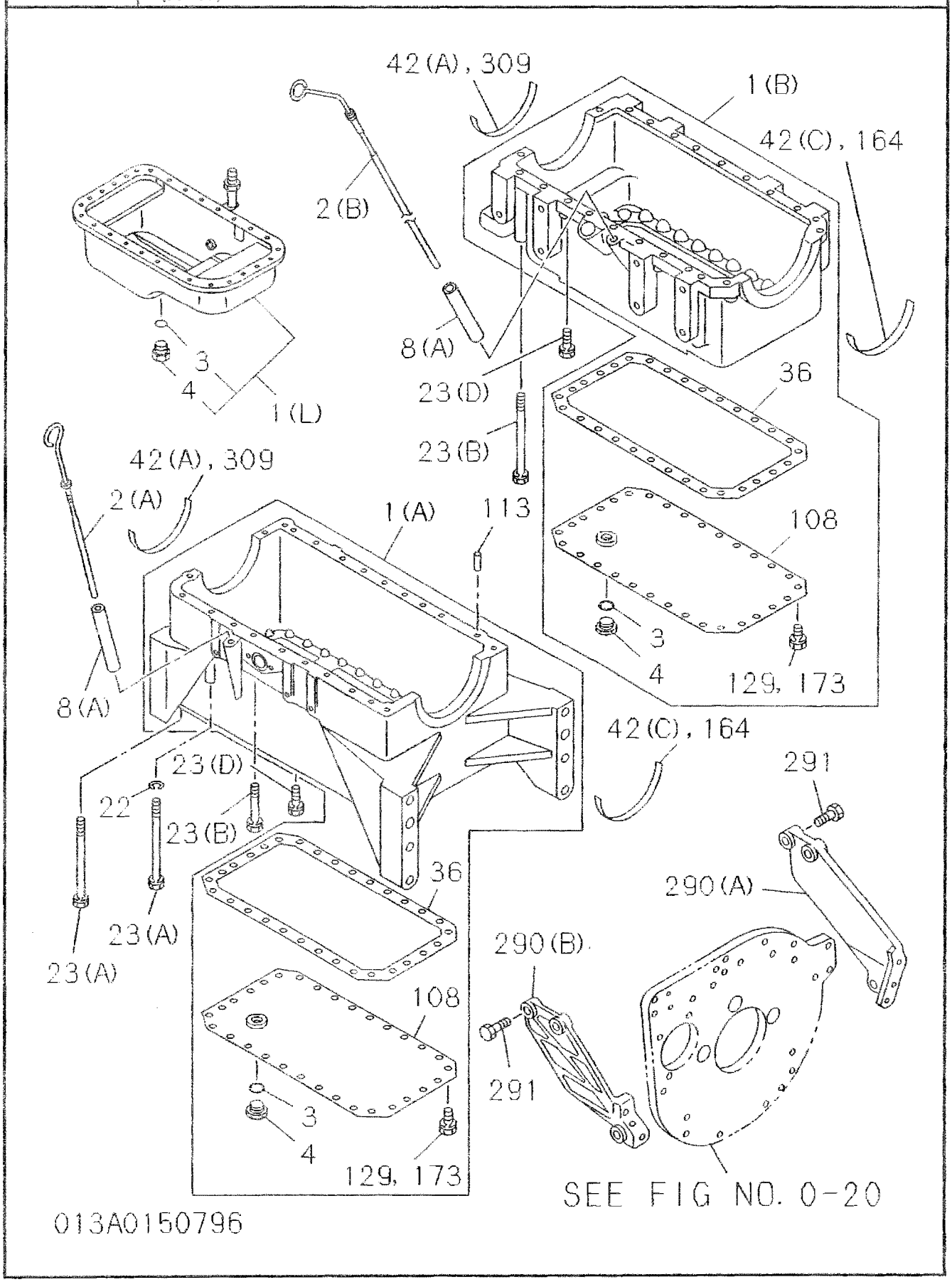

013A0150796

OIL PAN AND LEVEL GAUGE

(NO.2)

0-13

FIG-NO.

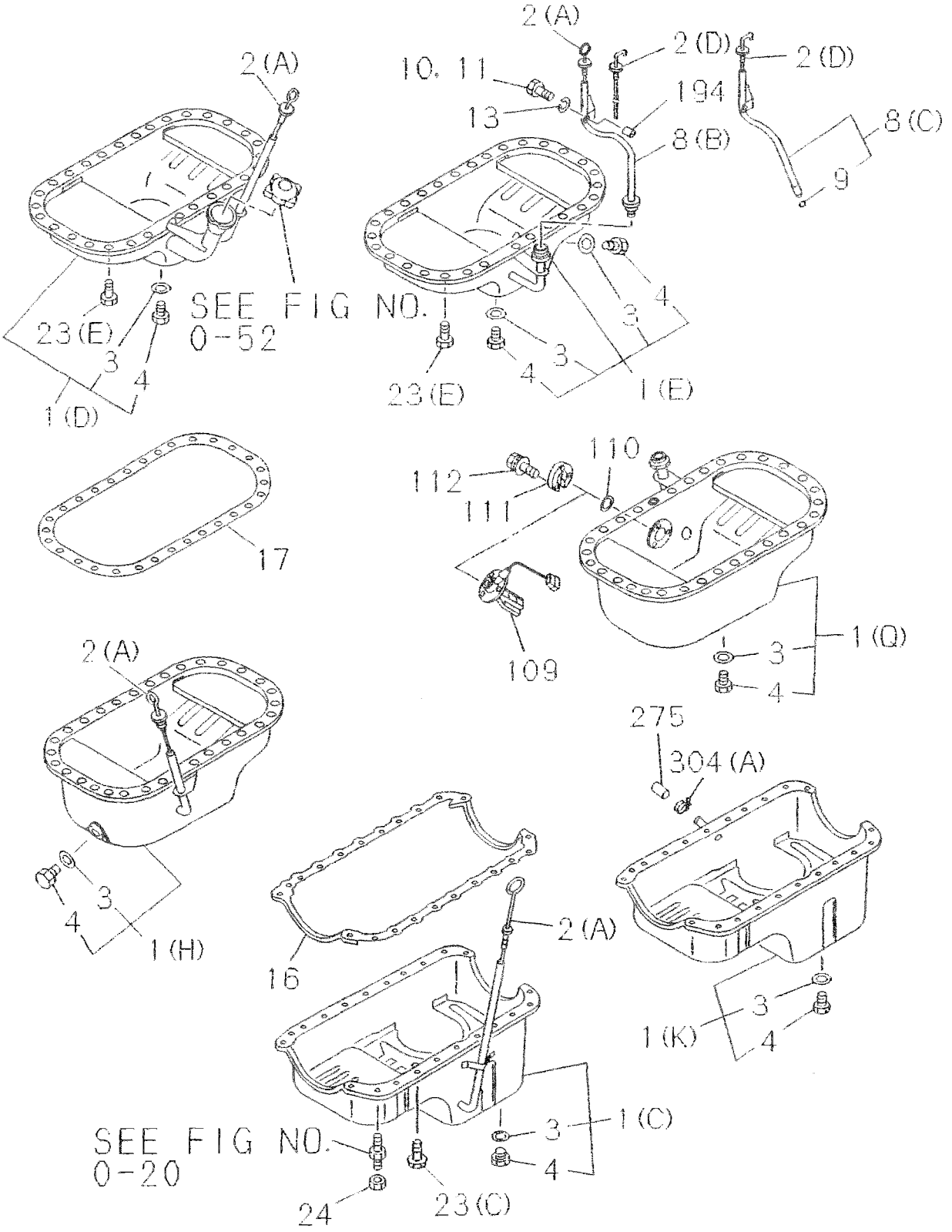

013A0250796

0-13	OIL PAN AND LEVEL GAUGE
FIG-NO.	(NO.3)

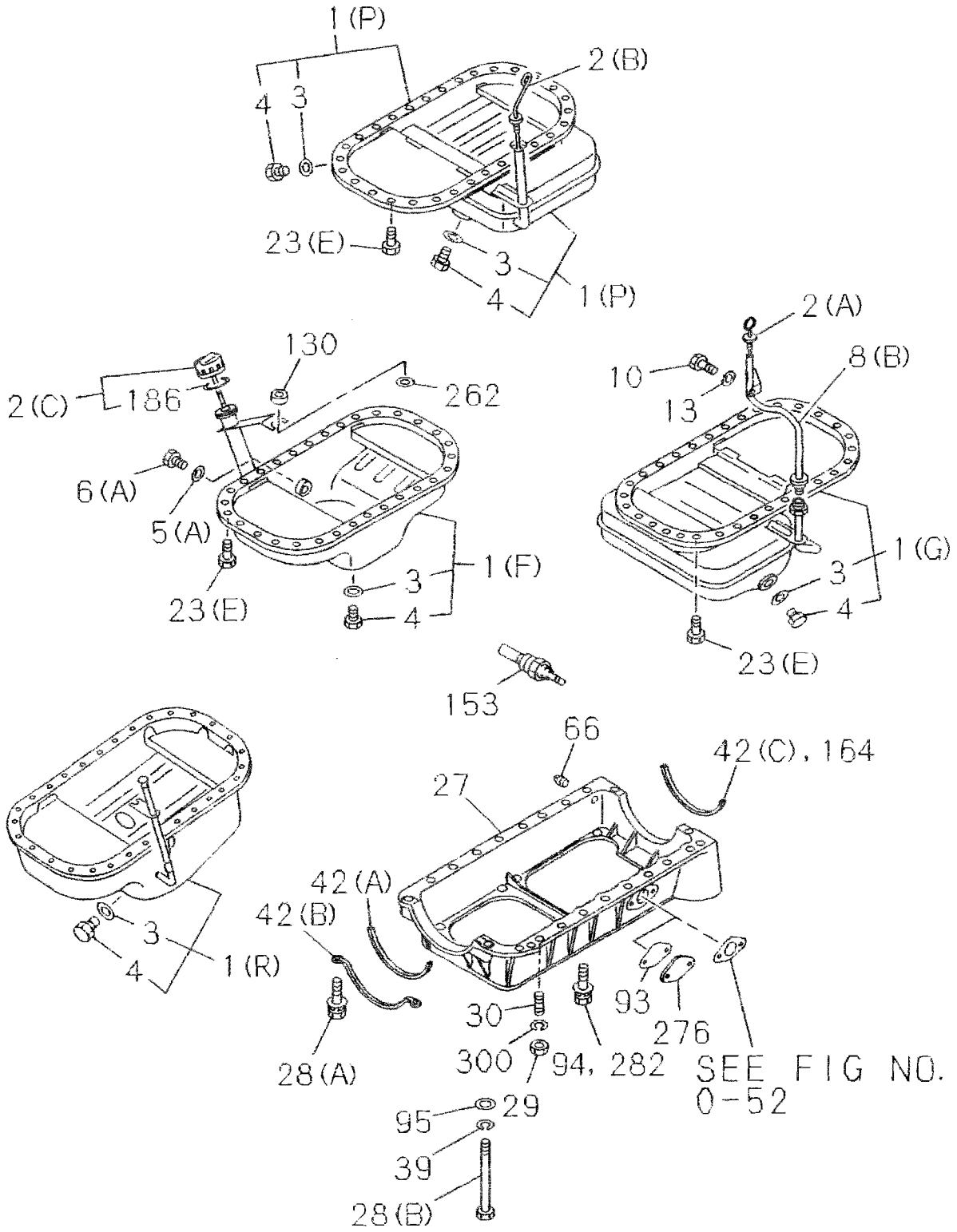

013A0350796

OIL PAN AND LEVEL GAUGE

(NO.4)

0-13

FIG-NO.

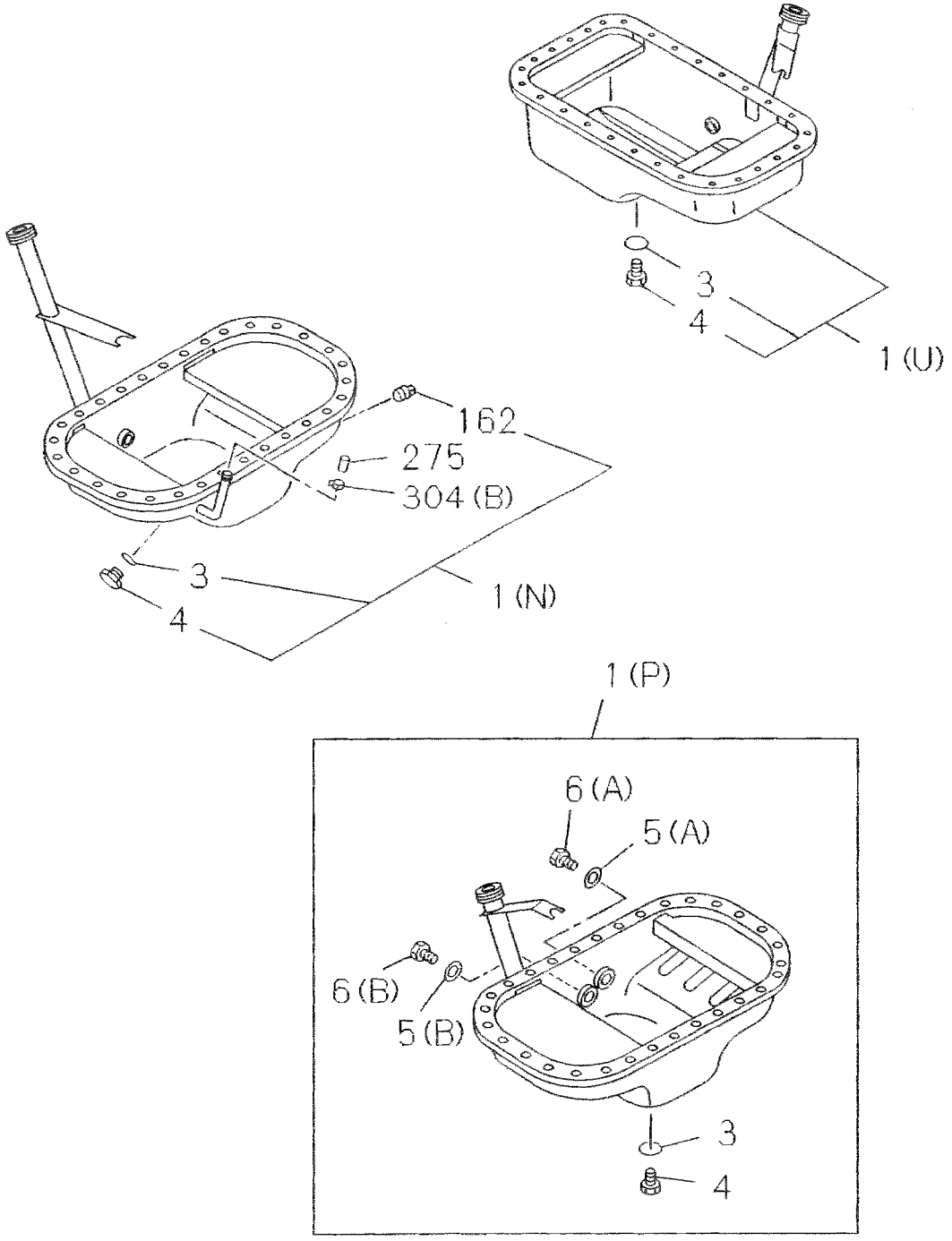

013A0450796

0-13 A OIL PAN AND LEVEL GAUGE

FIG-NO.

KEY NO	PART NUMBER	I/C	APPLIED DATE	L/R	QTY	4JB1 (ABCDEFGHIJKLMNOPQRSTUVWXY)	4JB1 (ZABCDEFGHIJKLMNOPQRSTUVWX)	Remarks
1	PAN ASM: OIL							
(A)	894129-3272		9503-		1	V		
(B)	894170-1206		9503-		1	WX		
(C)	894321-5720		9503-		1	F		
(D)	894449-3361		9503-		1		Z	
(E)	894428-7960		9503-		1	AB JKL NOP S U	MN Q	
(F)	511360-3543		9503-		1	H	KL OP	
(G)	894443-2740		9503-		1	C		
(H)	897020-2771		9503-		1		G	
(K)	897013-9643		9503-		1		IJ	
(L)	894334-7390		9503-		1	Q	BC H	
(M)	894435-0821		9503-		1		DE	
(M)	894338-7310	C	9503-9712		1		F	
(M)	897178-7810		9801-		1		F	
(M)	894435-0821		9503-		1		RS	
(N)	897109-5150	A	9503-9805		1	DE		
(N)	897109-5150		9503-		1	I M R T		
(P)	511360-3543		9806-		1	DE		
(P)	511360-3543		9406-9406		1	G		
(P)	897115-9190		9407-		1	G		
(P)	511360-4362		9503-		1		A	
2	GAUGE: OIL LEVEL							
(A)	111760-1860		9503-		1	AB JKL NOP S U	MN Q	
(A)	111760-1790		9503-		1	C	F	
(A)	894324-6750		9503-		1	F		
(A)	894342-3851		9503-		1	Q	BC H	
(A)	894152-9030		9503-		1	V	Z	
(B)	894429-9980		9503-		1	WX		
(B)	897020-6000		9503-		1		G	
(C)	894385-5550		9503-		1	I		
(C)	894385-5550		9503-9805		1	DE		
(C)	894369-3730		9503-		1	GH	A KL OP	
(C)	894369-3730		9806-		1	DE		
(C)	111760-2261		9503-		1	M R T		
(D)	897022-7180		9503-		1		DE RS	
(D)	894470-7650		9503-		1		IJ	
3	GASKET: DRAIN PLUG --ALSO INCLUDED IN GASKET SET(ENGINE)							
	109623-2350		9503-		1	AB DE HIJKLMNOPQRSTU	ZABC H KLMNOPQ	
	909720-5600		9503-		1	C		
	909920-6510		9503-		1	F VWX		
	109623-2350		9406-9406		1	G		
	897021-0620		9407-		1	G		
	909571-4200		9503-		1		DEF RS	ID=20.5 OD=28.0
	897021-0620		9503-		1		G	
	894158-3280		9503-		1		IJ	ID=14.2 OD=24
	909571-4180		9503-		1		DEF RS	ID=18
4	PLUG: DRAIN, OIL							
	999202-3200		9503-		1	ABCDE HIJKLMNOPQRSTU	ZABC H KLMNOPQ	M20
	909662-0120		9503-		1	F VWX	DEF RS	
	109604-0100		9503-		1	G	G	

OIL PAN AND LEVEL GAUGE

0-13 A
FIG-NO.

Model: 4JB1

Model code columns: ABCDE FGHIJ KLMNO PQRST UVWXY ZABCD EFGHI JKLMN OPQRS TUVWX

KEY NO	PART NAME / PART NUMBER	ITC	APPLIED DATE	LR	QTY	Applicable models	Remarks
4	PLUG: DRAIN, OIL						
	999202-7200		9503-		1	GH KL O	
	894152-6130		9503-		1	IJ	M14X14
	999202-3180		9503-		1	DEF RS	M18X33
5	GASKET: PLUG, OIL DRAIN						
(A)	909571-4160		9503-		1	G A KLMNOP	
(B)	109623-1790		9503-		1	A	
6	PLUG: OIL DRAIN						
(A)	999202-3160		9503-		1	G A KLMNOP	M16X12
(B)	109604-0220		9503-		1	A	M24X17
8	TUBE: GUIDE, OIL LEVEL GAUGE						
(A)	894388-1750		9503-		1	V	
(A)	894388-3260		9503-		1	WX	
(B)	894468-5170		9503-		1	A C KL O S U BC F H MN Q	
(B)	894423-1920		9503-		1	B J NOP	
(B)	897023-8150		9503-		1	DE RS	
(C)	897044-8860		9503-		1	IJ	
9	GASKET: GUIDE TUBE, OIL LEVEL GAUGE						
	509623-0020		9503-		1	IJ	
10	BOLT: GUIDE TUBE						
	050140-8160	A	9503-9804		1	B J NO Q	M8X16 W/WASHER
	028080-8120		9805-		1	B J NO Q	M8X16
	050041-0220	A	9503-9804		1	R	M10X22 W/LK WASHER
	028681-0200		9805-		1	R	M10X22
	020801-0160	A	9503-9804		1	DE	M10X22 W/LK WASHER
	028681-0200		9805-		1	DE	M10X22
13	WASHER: PL, GUIDE TUBE, OIL LEVEL GAUGE						
	909160-6080		9503-9804		1	B J NO Q	ID=8
	909150-5100		9503-9804		1	DE	ID=10.2
	909164-7080		9503-		1	IJ	ID=8 OD=22
	909164-6100		9503-9804		1	R	ID=10 OD=22
16	GASKET: OIL PAN TO C/BL						
	897080-1940		9503-		1	F IJ	
17	GASKET: OIL PAN					--ALSO INCLUDED IN GASKET SET(ENGINE)	
	897045-3220		9503-		1	ABCDE GHIJ KLMNO PQRST U ZABCD EFGH KLMNOPQRS	
22	WASHER: LK, OIL PAN						
	909150-5080		9503-		11	WX	ID=8
23	BOLT: OIL PAN						
(A)	509030-0441		9503-		6	V	
(A)	050040-8000		9503-		2	V	M8X100 W/LK WASHER
(A)	894205-9871		9503-		4	V	M8X75
(B)	894156-7961		9503-		4	V	
(B)	909804-1800		9503-		11	WX	

0-13 A OIL PAN AND LEVEL GAUGE

FIG-NO.

KEY NO	PART NUMBER	ITC	APPLIED DATE	LR	QTY	4JB1 ABCDE	FGHIJ	KLMNO	PQRST	UVWXY	ZABCD	EFGHI	JKLMN	OPQRS	TUVWX	Remarks
23	**BOLT: OIL PAN**															
(C)	894133-9732		9503-		12		F					I	J			
(D)	050040-8400	A	9503-9804		6					V						M8X40 W/LK WASHER
(D)	028680-8400		9805-		6					V						M8X40
(D)	028680-8400		9805-		7					WX						M8X40
(D)	050040-8400	A	9503-9804		7					WX						M8X40 W/LK WASHER
(D)	050040-8250	A	9503-9804		2					WX						M8X25 W/LK WASHER
(D)	028680-8250		9805-		2					WX						M8X25
(D)	050040-8300	A	9503-9804		2					WX						M8X30 W/LK WASHER
(D)	028080-8300		9805-		2					WX						M8X30
(D)	050040-6160		9503-		30	ABCDE	GHIJ	KLMNO	PQRST	U	ZABCD	EFGH	KLMN	OPQRS		M6X16 W/LK WASHER
24	**NUT: OIL PAN**															
	509440-0100		9503-		10		F					I	J			M8 FLANGE
27	**CRANKCASE**															
	894428-7954		9503-		1	ABCDE	GHIJ	KLMNO	PQRST	U	ZA CD	EFGH		QRS		
	897089-7980		9503-		1						B		KLMN	OP		
28	**BOLT: CRANKCASE TO C/BL**															
(A)	050140-8000		9409-		2	ABCDE	GHIJ	KLMNO	PQRST	U	ZABCD	EFGH	KLMN	OPQRS		M8X100 W/WASHER
(A)	897015-5151		9503-		2	ABCDE	GHIJ	KLMNO	PQRST	U	ZABCD	EFGH	KLMN	OPQRS		
(A)	050140-8250	A	9503-9804		16	ABC	J	KL NO	Q S	U	Z CD	EFGH		QRS		M8X25 W/WASHER
(A)	028680-8250		9805-		16	ABC	J	KL NO	Q S	U	Z CD	EFGH		QRS		M8X25
(A)	028680-8250		9805-		15	DE	GHI	M	P R T		A					M8X25
(A)	050140-8250	A	9503-9804		15	DE	GHI	M	P R T		A					M8X25 W/WASHER
(A)	028680-8250		9805-		18						B		MN			M8X25
(A)	050140-8250	A	9503-9804		18						B		MN			M8X25 W/WASHER
(A)	050140-8250	A	9503-9804		17								KL	OP		M8X25 W/WASHER
(A)	028680-8250		9805-		17								KL	OP		M8X25
(B)	897015-5151		9503-		2	ABCDE	GHIJ	KLMNO	PQRST		ZA CD	EFGH		QRS		
(B)	909801-2160	C	9408-9408		4						B		KLMN	OP		
(B)	897015-5151		9409-		2						B		KLMN	OP		
29	**NUT: CRANKCASE**															
	909110-4080		9503-		2	ABCDE	GHIJ	KLMNO	PQRST	U	ZA CD	EFGH		QRS		M8
	509440-0100		9503-		2						D	EFG				M8 FLANGE
30	**STUD: CRANKCASE**															
	904110-8400		9503-		2	ABCDE	GHIJ	KLMNO	PQRST	U	ZA C			QRS		M8X40 L=52
	904110-8450		9503-9704		2						D	EFG				M8X45 L=57
	904110-8400		9705-		2						D	EFGH				M8X40 L=52
36	**GASKET: OIL PAN TO BED PLATE**					*--ALSO INCLUDED IN GASKET SET(ENGINE)*										
	511367-0690		9503-		1					V						
	894419-0870		9503-		1					WX						
42	**GASKET: CRANKCASE TO C/BL**					*--ALSO INCLUDED IN GASKET SET(ENGINE)*										
(A)	894147-5290		9503-		1					WX	B		KLMN	OP		
(B)	894174-9391	C	9503-9701		1	ABCDE	GHIJ	KLMNO	PQRST	U	ZA C			QRS		
(B)	897074-7270	C	9503-9701		1						D	EF				
(B)	897120-9330		9702-		1	ABCDE	GHIJ	KLMNO	PQRST	U	ZA CD	EFGH		QRS		
(C)	897120-9310		9702-		1	ABCDE	GHIJ	KLMNO	PQRST	UVWX	ZABCD	EFGH	KLMN	OPQRS		

OIL PAN AND LEVEL GAUGE

0-13 A

FIG-NO.

KEY. NO	PART NAME / PART NUMBER	I T C	APPLIED DATE	L R	Q T Y	4JB1 PPPPP AAAAA 0000 1234	PPPPP AAAAA 0000 5689	PPPPP AAAAA 1111 2333 U G	PPPPP AAAAA 1112 7890	PPPP AABB 22 00 12 23	PPPPP DDFHK 0 1	PPPPP KKKKK 0000L 1234	PPPPP KLLLL L U00 0 G11 1 U G	PPPPP LLNNN 00 00 22 11 U F U G	Remarks
						A B C D E	F G H I J	K L M N O	P Q R S T	U V W X Y	Z A B C D	E F G H I	J K L M N	O P Q R S	T U V W X
66	PLUG: CRANKCASE														
	909204-5210		9503-		1						B		KLMN	OP	PT1/2
94	BOLT: COVER														
	050040-8180	A	9503-9804		2						B				M8X18 W/LK WASHER
	028080-8160		9805-		2						B				M8X18
108	COVER: OIL PAN														
	894169-4300		9503-		1					V					
	894419-0860		9503-		1					WX					
113	PIN: STRAIGHT														
	894130-0750		9503-		2					V					
129	TUBE: DIST														
	914149-1730		9503-		1								KLMN	OP	
130	SPACER: DIST. OIL PAN														
	894440-9100		9503-		1		I	M	P R T						
	914149-1730		9806-		1	DE									
	894440-9100		9503-9805		1	DE									
	914149-1730		9503-		1		GH				A		KL	OP	
153	THERMOMETER UNIT: OIL														
	983151-4320		9503-		1	E		KL	P		A		MN		
162	PLUG: OIL PAN														
	909204-5170		9503-		1			M	T						PT3/8
164	GASKET: OIL PAN TO BRG CAP									—ALSO INCLUDED IN GASKET SET(ENGINE)					
	897014-4160	C	9503-9701		1	ABCDE	GHIJ	KLMNO	PQRST	UVWX	ZABC		KLMN	OPQRS	
	897120-9310		9702-		1	ABCDE	GHIJ	KLMNO	PQRST	UVWX	ZABC		KLMN	OPQRS	
	897074-7280	C	9503-9701		1							DEFG			
	897120-9310		9702-		1							DEFGH			
173	BOLT: COVER														
	050040-8180		9503-		30					VWX					M8X18 W/LK WASHER
262	WASHER: PL. STAY														
	909164-7080		9503-		1	DE	GHI	M	P R T		A		KL	OP	ID=8 OD=22
275	CAP: RUBBER														
	894249-2890		9503-		1								J		ID=12 L=30
	894373-2470		9503-		1	DE	I	M	P R T						
282	BOLT: CRANKCASE														
	050040-8400	A	9503-9804		1		I	M	P R T						M8X40 W/LK WASHER
	028680-8400		9805-		1		I	M	P R T						M8X40
	028680-8400		9805-9805		1	DE									M8X40
	028680-8300		9806-		1	DE									M8X30
	050040-8300	A	9503-9804		1		GH				A		KL	OP	M8X30 W/LK WASHER
	028680-8300		9805-		1		GH				A		KL	OP	M8X30
290	STIFFNER: OIL PAN														
(A)	894324-4220		9503-		1		F								

0-13 A OIL PAN AND LEVEL GAUGE

FIG-NO.

4JB1 model columns:

ABCDE	FGHIJ	KLMNO	PQRST	UVWXY	ZABCD	EFGHI	JKLMN	OPQRS	TUVWX
PA01 PA02 PA03 PA04	PA05 PA06 PA08 PA09 PA12	PA13 PA13UG PA14 PA15 PA16	PA17 PA18 PA19 PA20 PA21	PA22 PB PB02 PB03	PD PD01 PF PH PK	PK01 PK02 PK03 PK04 PKL	PL01 PL PLUG PL01 PL01UG	PL02 PL02UF PN PN01 PN01UG	

KEY. NO	PART NAME / PART NUMBER	ITC	APPLIED DATE	LR	QTY	4JB1	Remarks
290	STIFFNER: OIL PAN						
(A)	894122-2563		9503-		1	I J	
(B)	894324-2200		9503-		1	F	
(B)	894122-2553		9503-		1	I J	
291	BOLT: STIFFENER, OIL PAN						
	050141-0350	A	9503-9804		2	F	M10X35 W/WASHER
	028681-0350		9805-		2	F	M10X35
	050141-0400	A	9503-9804		2	F	M10X40 W/WASHER
	028681-0350		9805-		2	F	M10X40
300	WASHER: LK						
	909150-5080		9503-		2	ABCDE GHIJ KLMNO PQRST U ZA CD EFGH QRS	ID=8
304	CLIP: CAP						
(A)	509704-0271		9503-		1	J	
(B)	894238-9240		9503-		1	DE I M P R T	ID=18

OIL PAN AND LEVEL GAUGE

0-13 B
FIG-NO.

KEY. NO	PART NAME / PART NUMBER	ITC	APPLIED DATE	LR	QTY	4JB1 (A B C D E F G H I J K L M N O P Q R S T U V W X Y)	A-4JB1 (Z A B C D E F G H I J K L M N O P Q R S T U V W X)	Remarks
1	PAN ASM; OIL							
(A)	897115-9190		9503-		1		Z A M	
(A)	511360-3543		9503-		1		C H K	
(B)	894170-1206		9503-		1	T		
(D)	894449-3361		9503-		1	F G		
(E)	894428-7960		9503-		1	I K L W	D J L	
(P)	894362-2010		9503-		1	R S		
(Q)	897014-2230		9503-		1	A B		
(R)	897173-8660		9503-		1		F N P	
(R)	897190-9380		9712-		1		T	
(R)	897043-4080		9503-		1	M O		
(L)	894334-7390		9503-		1	C N V	B O R	
(N)	511360-1563		9406-9406		1	J		
(N)	897109-5150		9407-		1	J P	E G I	
(U)	897096-3970		9503-9705		1	D E	Q S	
(U)	897170-7120		9706-		1	D E H	Q S	
(R)	897178-7810		9801-		1	U		
2	GAUGE; OIL LEVEL							
(A)	894342-3851		9503-		1	A B C N U V	B O R	
(A)	894152-9030		9503-		1	F G		
(A)	111760-1860		9503-		1	I K L W	D J L	
(A)	897047-9310		9503-		1	M O	F N P	
(A)	111760-3190		9712-		1		T	
(A)	894369-3730		9503-		1		Z A C H K M	
(A)	111760-2261		9503-		1		E G	
(B)	897016-0330		9503-		1	R S		
(B)	894429-9980		9503-		1	T		
(C)	894385-5550		9503-		1	J P	I	
(C)	897039-1980		9503-		1	D E H	Q S	
3	GASKET; DRAIN PLUG --ALSO INCLUDED IN GASKET SET(ENGINE)							
	109623-2350		9503-		1	A B C F G I J K L N P V W	B C D E F G H I J K L N O P R T	
	109623-2350		9503-9705		1	D E	Q	
	109623-0570		9706-		1	D E H	Q S	
	909571-4180		9503-		1	M O U		ID=18
	909920-6510		9503-		2	R S		
	909920-6510		9503-		1	T		
	897021-0620		9503-		1		Z A M	
4	PLUG; DRAIN, OIL							
	999202-3200		9503-		1	A B C F G I J K L M N O P V W	B C D E F G H I J K L O R	M20
	999202-3200		9503-9705		1	D E	Q S	M20
	909662-0120		9706-		1	D E H	Q S	
	909662-0120		9503-		2	R S		
	909662-0120		9503-		1	T		
	109604-0810		9503-		1	U		
	109604-0100		9503-		1		Z A M	
5	GASKET; PLUG, OIL DRAIN							
(A)	909571-4160		9503-		1	F G I J K L P	Z A C	
6	PLUG; OIL DRAIN							
	999202-3160		9503-		1	F G I J K L P	Z A C	M16X12

0-13 B OIL PAN AND LEVEL GAUGE

FIG-NO.

KEY NO	PART NUMBER	ITC	APPLIED DATE	LR	QTY	4JB1 ABCDE	4JB1 FGHIJ	4JB1 KLMNO	4JB1 PQRST	4JB1 UVWXY	A-4JB1 ZABCD	A-4JB1 EFGHI	A-4JB1 JKLMN	A-4JB1 OPQRS	A-4JB1 TUVWX	Remarks
8	TUBE: GUIDE, OIL LEVEL GAUGE															
(A)	894388-3260		9503-		1				T							
(B)	894423-1920		9503-		1	ABC					B			O R		
(B)	894468-5170		9503-		1		I	KL N		UVW			J			
10	BOLT: GUIDE TUBE															
	050140-8160	A	9503-9804		1	ABC					B			R		M8X16 W/WASHER
	028080-8120		9805-		1	ABC					B			R		M8X16
	028080-8600		9805-		1					UV						M8X16
	050040-8400	A	9503-9804		1					W						M8X40 W/LK WASHER
	028680-8400		9503-		1					W						M8X40
13	WASHER: PL, GUIDE TUBE, OIL LEVEL GAUGE															
	909164-5080		9707-		1					UV						ID=8
	909160-6080		9503-9804		1					W						ID=8
16	GASKET: OIL PAN TO C/BL															
	511367-0040		9503-9503		1	ABCD			RS	W						
	897020-1540	C	9410-9410		1		FG IJ	KLMNO								
	897045-3220		9411-		1	ABCDE	FGHIJ	KLMNO	P RS	UVW	ZABCD	EFGHI	JKLMN	OPQRS	T	
22	WASHER: LK, OIL PAN															
	909150-5080		9503-		11				T							ID=8
23	BOLT: OIL PAN															
(B)	909804-1800		9503-		11				T							
(D)	050040-8400		9503-		7				T							M8X40 W/LK WASHER
(D)	050040-8250		9503-		2				T							M8X25 W/LK WASHER
(D)	050040-8300		9503-		2				T							M8X30 W/LK WASHER
(E)	050040-6160		9503-		30	ABCDE	FGHIJ	KLMNO	P RS	UVW	ZABCD	EFGHI	JKLMN	OPQRS	T	M6X16 W/LK WASHER
27	CRANKCASE															
	894428-7954		9503-		1	AB	FG IJ	KLM O	P		ZABCD	E GHI	J LM	OPQ S		
	897089-7980		9503-		1	C		N					K	R		
	894428-7954		9503-9509		1		H					F				
	894335-6802		9510-		1							F				
	894335-6802		9503-		1	DE				UVW			N		T	
	897096-2060		9503-		1				RS							
28	BOLT: CRANKCASE TO C/BL															
(A)	050140-8000		9503-		2	ABCDE	FGHIJ	KLMNO	P RS	UVW	ZABCD	EFGHI	JKLMN	OPQRS	T	M8X100 W/WASHER
(A)	050140-8250	A	9503-9804		16	AB	FG IJ	KL	P	W	D	F				M8X25 W/WASHER
(A)	028680-8250		9805-		16	AB	FGHIJ	KL	P	W	D	F	J L N	OP		M8X25
(A)	050140-8250	A	9503-9804		18	C		N	RS					R		M8X25 W/WASHER
(A)	028680-8250		9805-		18	C		N	RS					R		M8X25
(A)	028680-8250		9805-		17								K			M8X25
(A)	050140-8250	A	9503-9804		15	DE	J	M O			ZABC	E G		Q S		M8X25 W/WASHER
(A)	028680-8250		9805-		15	DE	J	M O		UV	ZABC	E GHI	M	Q S	T	M8X25
(B)	897015-5151		9503-		2	AB DE	FGHIJ	KLM O	P	UVW	ZABCD	EFGHI	JKLMN	OPQRS	T	
(B)	909801-2160		9503-9503		4	C		N	RS							
(B)	897015-5151		9409-9409		2	C		N	RS							
29	NUT: CRANKCASE															
	909110-4080		9503-		2	AB DE	FGHIJ	KLM O	P	UVW	ZABCD	EFGHI	J LMN	OPQRS	T	M8

OIL PAN AND LEVEL GAUGE

FIG-NO. 0-13 B

KEY NO	PART NAME / PART NUMBER	ITC	APPLIED DATE	LR	QTY	4JB1	A-4JB1	Remarks
30	STUD; CRANKCASE							
	904110-8400		9503-		2	AB DEFGHIJKLM OP UVW	ZABCDEFGHIJ LMNOPQRST	M8X40 L=52
36	GASKET; OIL PAN TO BED PLATE					--ALSO INCLUDED IN GASKET SET(ENGINE)		
	894419-0870		9503-		1	T		
39	WASHER; LK. CRANKCASE TO C/BL							
	909150-5080		9408-9408		4	C RS W		ID=8
42	GASKET; CRANKCASE TO C/BL					--ALSO INCLUDED IN GASKET SET(ENGINE)		
(B)	894174-9391	C	9503-9701		1	AB DEFG IJKLM OP W		
(B)	897120-9330		9702-		1	AB DEFGHIJKLM OP W	HIJ LMNOP T	
(B)	897120-9330		9503-		1	UV	ZABCDEFG Q S	
(B)	894147-5290		9503-		1	C N RS	K	
(C)	897120-9310		9702-		1	ABCDEFGHIJKLMNOP RSTUVW	HIJKLMNOP T	
(C)	897120-9310		9503-		1		ZABCDEFG QRS	
66	PLUG; CRANKCASE							
	909204-5210		9503-		1	C N RS	K R	PT1/2
93	GASKET; COVER, CRANKCASE							
	894341-8740		9503-		1	DE N	K R T	
	911219-2160		9503-		1	UVW		
94	BOLT; COVER							
	050040-8180	A	9503-9804		2	DE N W	R	M8X18 W/LK WASHER
	028080-8160		9805-		2	DE N UVW	R	M8X18
95	WASHER; PL, CRANKCASE							
	909160-5080		9408-9408		4	C RS		ID=8
108	COVER; OIL PAN							
	894419-0860		9503-		1	T		
109	SWITCH; OIL LEVEL							
	897020-2480	C	9410-9410		1	AB		
	897119-3581		9411-		1	AB		
110	GASKET; SW, OIL LEVEL							
	109623-3550		9503-		1	AB		
111	SPACER; SW, OIL LEVEL							
	897020-2490		9503-		1	AB		
112	BOLT; SW, OIL LEVEL							
	050140-6280		9503-9804		3	AB		M6X28
	028080-6250		9805-		3	AB		M6X28
130	SPACER; DIST. OIL PAN							
	894440-9100		9503-		1	J P	E G I	
	894440-9100		9503-9805		1		ZABCD Q	
	914149-1730		9806-		1	DE	ZABC H K M Q S	
162	PLUG; OIL PAN							
	909204-5170		9503-		1	J P	E G	PT3/8

0-13 B OIL PAN AND LEVEL GAUGE

FIG-NO.

KEY. NO	PART NAME / PART NUMBER	ITC	APPLIED DATE	LR	QTY	4JB1 PPPPPPPPPPPPPPPPP PPTTTT YYYYYVVVWWWWWWWW TTPPPP 0000 00 0000000 QOBKKX 1234 12 2346789 0 0 1 1 ABCDEFGHIJKLMNOPQRSTUVWXY	A-4JB1 PPPPPPPPPPPPPPPPPPPPP AAAAAAAAAAAAAAAAAYYYY AAAAAAAAAAAAAAAAWAAAA 00000000011111 10 000 12345678901234 51 123 ZABCDEFGHIJKLMNOPQRSTUVWX	Remarks
164	GASKET: OIL PAN TO BRG CAP --ALSO INCLUDED IN GASKET SET(ENGINE)							
	897014-4160		9503-9701		1	ABCDEFG IJKLMNOP RST W		
173	BOLT: COVER							
	050040-8180		9503-		30	T		M8X18 W/LK WASHER
186	GASKET: LEVEL GAUGE							
	909920-6090		9503-		1	D J		
194	SPACER: GUIDE TUBE							
	894225-5620		9707-		1	UV		
	989195-8020		9503-		1	UV		
262	WASHER: PL, STAY							
	909164-7080		9503-		1	DE J M P	ZABCDEFGHI KLMN PQ ST	ID=8 OD=22
275	CAP: RUBBER							
	894373-2470		9503-		1	J P	E G I	
276	COVER: CRANKCASE							
	911219-2150		9503-		1	DE N UVW	K R T	
282	BOLT: CRANKCASE							
	028680-8300		9805-		1	DE	ZABC Q S	M8X30
	028080-8160		9805-		2	DE N W	R	M8X30
	050040-8300	A	9503-9804		1	DE	ZABC Q S	M8X30 W/LK WASHER
	050040-8400	A	9503-9804		1	J	E G	M8X40 W/LK WASHER
	028680-8400		9805-		1	J	E G	M8X40
	050040-8250	A	9503-9804		1	M O		M8X25 W/LK WASHER
	028680-8250		9805-		1	M O		M8X25
300	WASHER: LK							
	909150-5080		9503-		2	AB DEFGHIJKLM OP UVW	ZABCDEFGHIJ LMNOPQ ST	ID=8
304	CLIP: CAP							
(A)	894238-9240		9503-		1	J P	E G I	ID=18
309	GASKET: OIL PAN TO FRT PANEL							
	894147-5290		9503-		1	T		

MEMO

0-14	CAMSHAFT AND VALVE
FIG-NO.	(NO.1)

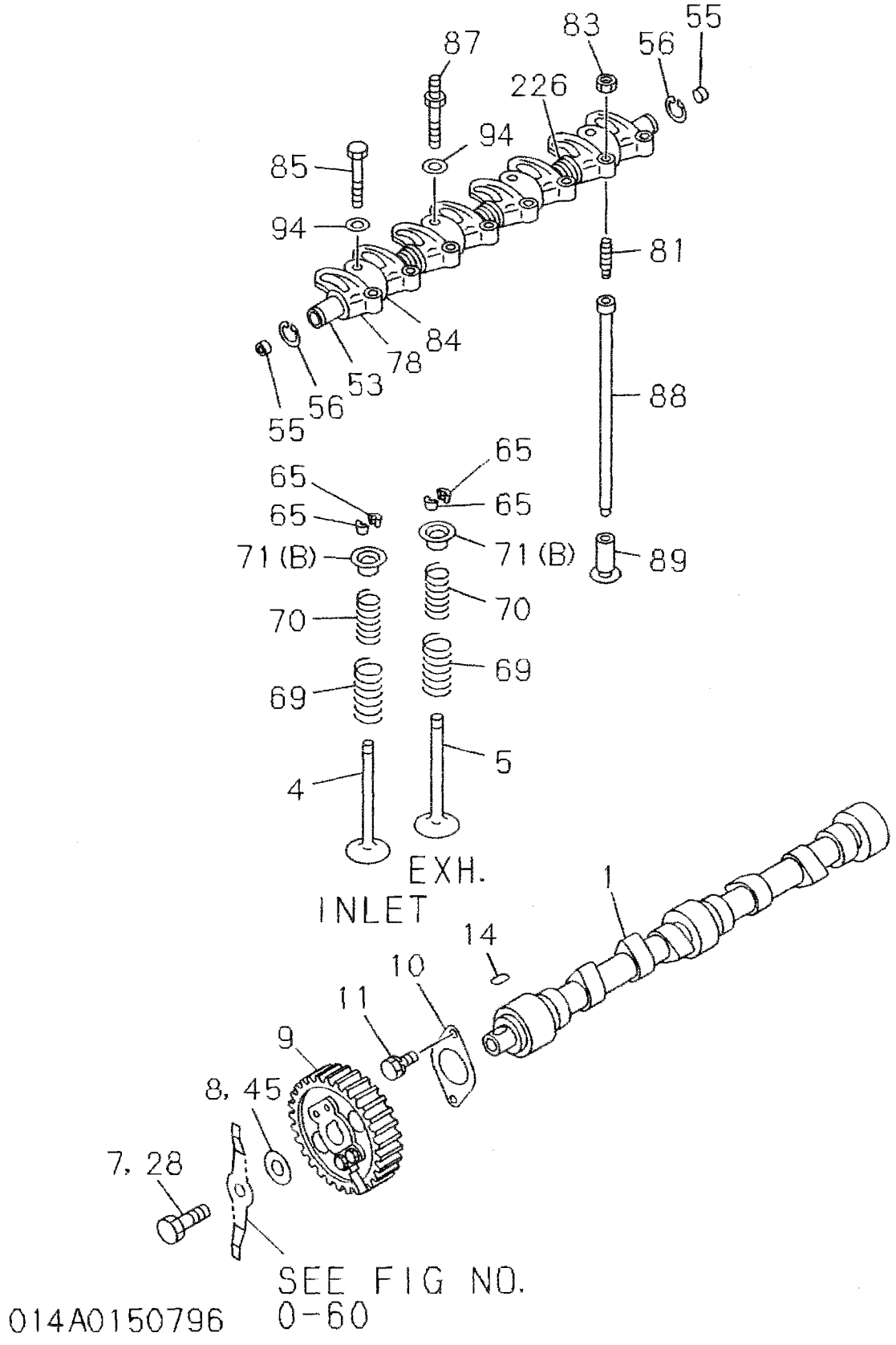

CAMSHAFT AND VALVE

(NO.2)

0-14

FIG-NO.

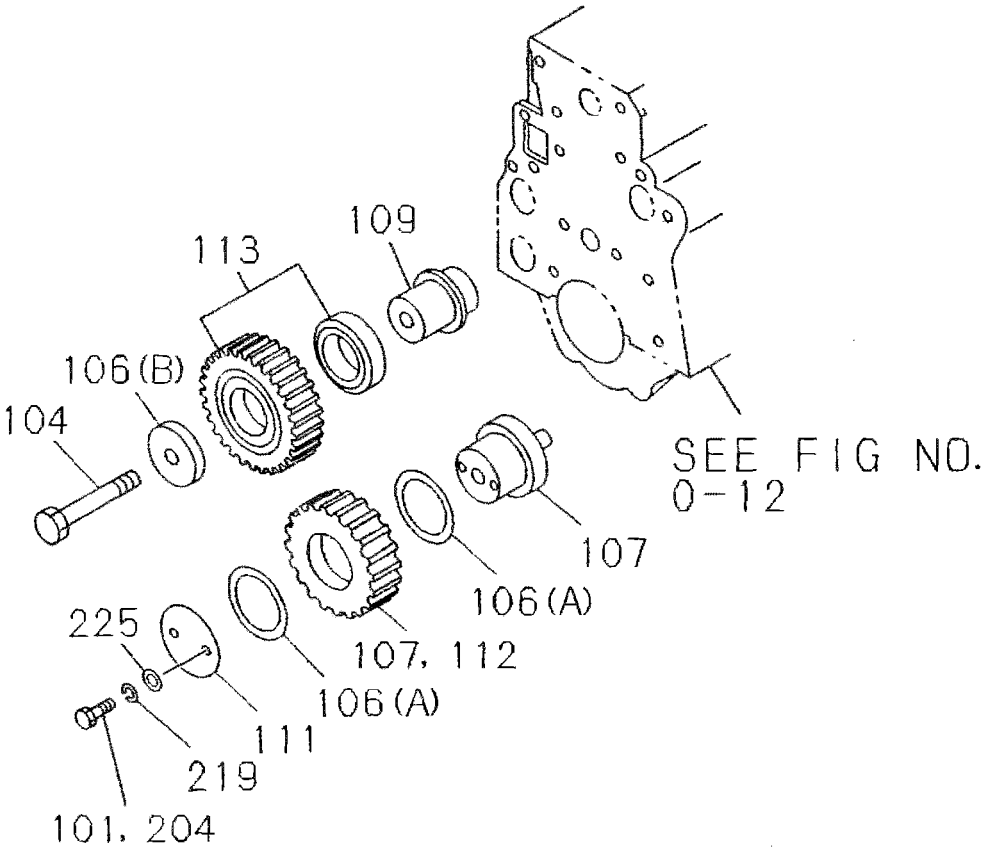

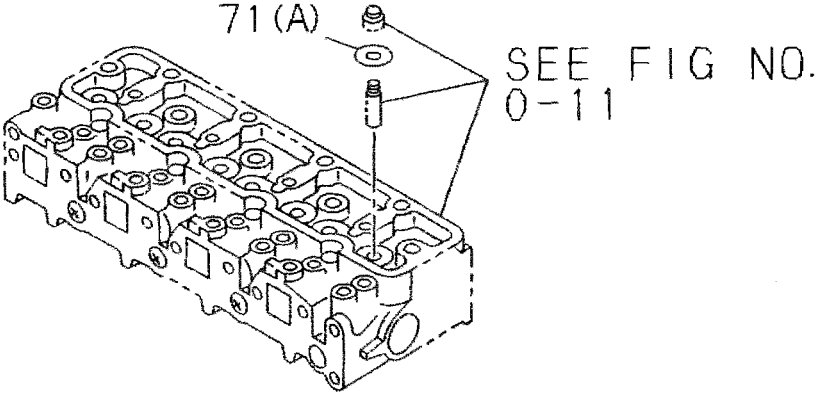

014A0250796

0-14 A CAMSHAFT AND VALVE

FIG-NO.

4JB1

KEY. NO	PART NAME / PART NUMBER	ITC	APPLIED DATE	LR	QTY	ABCDE	FGHIJ	KLMNO	PQRST	UVWXY	ZABCD	EFGHI	JKLMN	OPQRS	TUVWX	Remarks
1	CAMSHAFT															
	894127-7974		9503-		1	ABCDE	FGHIJ	KLMNO	PQRST	UVWX	ZA CD	E G	KLMN	OPQRS		
	894127-7974		9503-9710		1							F				
	894434-9052		9711-		1							F H				
	894434-9052		9503-		1						B	I	J			
4	VALVE: INL															
	894133-2751		9503-		4	ABCDE	FGHIJ	KLMNO	PQRST	UVWX	ZABCD	EFGHI	JKLMN	OP		
	894464-9210		9503-		4									QRS		
5	VALVE: EXH															
	894247-8751		9503-		4	ABCDE	FGHIJ	KLMNO	PQRST	UVWX	ZABCD	EFGHI	JKLMN	OP		
	894433-2450		9503-		4									QRS		
7	BOLT: CM/SHF GEAR															
	894433-4070		9503-		1						D	EFG I	J			M12X47
8	WASHER: CM/SHF GEAR															
	512519-0021		9503-		1	ABCDE	FGHIJ	KLMNO	PQRST	UVWX	ZABCD	EFGHI	JKLMN	OPQRS		
9	GEAR: CM/SHF															
	894326-3510		9503-		1	ABCDE	FGHIJ	KLMNO	PQRST	U	ZA CD	E G I	J	QRS		
	894326-3510	C	9503-9710		1							F				
	894324-3360		9711-		1							F H				
	897020-7430		9503-		1					VWX			KL	OP		
	894328-4480		9503-		1						B		MN			
10	PLATE: THRUST															
	894110-4801		9503-		1	ABCDE	FGHIJ	KLMNO	PQRST	UVWX	ZABCD	EFGHI	JKLMN	OPQRS		
11	BOLT: THRUST PLATE TO C/BL															
	050040-8160		9503-		2	ABCDE	FGHIJ	KLMNO	PQRST	UVWX	ZABCD	EFGHI	JKLMN	OPQRS		M8X16 W/LK WASHER
14	KEY: CM/SHF															
	908000-7180		9503-		1	ABCDE	FGHIJ	KLMNO	PQRST	UVWX	ZABCD	EFGHI	JKLMN	OPQRS		
28	BOLT: CAM PULLEY															
	509000-0690		9503-		1	ABCDE	FGHIJ	KLMNO	PQRST	UVWX	ZABC	H	KLMN	OPQRS		M12X47
53	SHAFT: ROCKER ARM															
	894152-3460		9503-		1	ABCDE	FGHIJ	KLMNO	PQRST	UVWX	ZABCD	EFGHI	JKLMN	OPQRS		
55	PLUG: ROCKER SHAFT END															
	912626-0050		9503-		2	ABCDE	FGHIJ	KLMNO	PQRST	UVWX	ZABCD	EFGHI	JKLMN	OPQRS		
56	RING: SNAP, ROCKER ARM															
	909180-0190		9503-		2	ABCDE	FGHIJ	KLMNO	PQRST	UVWX	ZABCD	EFGHI	JKLMN	OPQRS		
65	COLLAR: SPLIT															
	512565-0040		9503-		16	ABCDE	FGHIJ	KLMNO	PQRST	UVWX	ZABCD	EFGHI	JKLMN	OPQRS		
69	SPRING: VLV. OUTER															
	894252-5361		9503-		8	ABCDE	FGHIJ	KLMNO	PQRST	UVWX	ZABCD	EFGHI	JKLMN	OPQRS		

CAMSHAFT AND VALVE

0-14 A

FIG-NO.

KEY. NO	PART NAME / PART NUMBER	I T C	APPLIED DATE	L R	Q T Y	4JB1 PPPPP AAAAA 0000 1234	PPPPP AAAAA 00001 56892	PPPPP AAAAA 11111 33456 U G	PPPPP AAAAA 11122 78901	PPPP AABB 2 00 2 23	PPPPP DDFHK 0 1	PPPPP KKKKK 0000L 1234	PPPPP KLLLL L U00 0 G11 1 U G	PPPPP LLNNN 00 22 11 U U F G	Remarks
						ABCDE	FGHIJ	KLMNO	PQRST	UVWXY	ZABCD	EFGHI	JKLMN	OPQRS TUVWX	
70	SPRING; VLV. INNER														
	894252-5371		9503-		8							DEFG	I J	QRS	
71	SEAT; SPR														
(A)	512563-0010		9503-		8	ABCDE	FGHIJ	KLMNO	PQRST	UVWX	ZABCD	EFGHI	JKLMN	OPQRS	OD=34
(B)	894133-7312		9503-		8	ABCDE	FGHIJ	KLMNO	PQRST	UVWX	ZABCD	EFGHI	JKLMN	OPQRS	OD=32.8
78	ARM; ROCKER														
	894152-3440		9503-		8	ABCDE	FGHIJ	KLMNO	PQRST	UVWX	ZABCD	EFGHI	JKLMN	OPQRS	
81	SCREW; ADJ. ROCKER ARM														
	894152-2831		9503-		8	ABCDE	FGHIJ	KLMNO	PQRST	UVWX	ZABCD	EFGHI	JKLMN	OPQRS	M8X30
83	NUT; ADJ SCREW. LK														
	909111-5080		9503-		8	ABCDE	FGHIJ	KLMNO	PQRST	UVWX	ZABCD	EFGHI	JKLMN	OPQRS	M8
84	BRACKET; ROCKER SHAFT. INTER														
	894152-3451		9503-		4	ABCDE	FGHIJ	KLMNO	PQRST	UVWX	ZABCD	EFGHI	JKLMN	OPQRS	
85	BOLT; BRKT														
	894433-3020		9503-		1	ABCDE	FGHIJ	KLMNO	PQRST	UVWX	ZABCD	EFGHI	JKLMN	OPQRS	M10X60
87	BOLT; ROCKER SHAFT														
	894433-3040		9503-		3	ABCDE	FGHIJ	KLMNO	PQRST	UVWX	ZABCD	EFGHI	JKLMN	OPQRS	M8X15 & M10X60 L=82
88	ROD; PUSH														
	894143-2020		9503-		8	ABCDE	FGHIJ	KLMNO	PQRST	UVWX	ZABCD	EFGHI	JKLMN	OPQRS	
89	TAPPET; VALVE														
	894438-3050		9503-		8	ABCDE	FGHIJ	KLMNO	PQRST	UVWX	ZABCD	EFGHI	JKLMN	OPQRS	
94	WASHER; PL. BRKT														
	909164-0100		9503-		4	ABCDE	FGHIJ	KLMNO	PQRST	UVWX	ZABCD	EFGHI	JKLMN	OPQRS	
101	BOLT; THRUST COLLAR														
	509000-0841		9503-		2	ABCDE	FGHIJ	KLMNO	PQRST	U	ZA CD	EFGHI	J	QRS	M8X55 W/LK WASHER
104	BOLT; SHAFT IDLE														
	894109-7061		9503-		1	ABCDE	FGHIJ	KLMNO	PQRST	U	ZA CD	EFGHI	J	QRS	
	894129-3840		9503-		1					VWX	B		KLMNO	P	
106	WASHER; IDLE GEAR SHAFT														
(A)	509503-0820		9503-		2					VWX			KL	OP	
(A)	897020-6750	C	9412-9412		2						B		M		
(A)	897089-8450		9501-		2						B		MN		
(B)	512519-0021		9503-		1	ABCDE	FGHIJ	KLMNO	PQRST	U	ZA CD	EFGHI	J	QRS	
(B)	894129-3800		9503-		1					VWX			KL	OP	
(B)	894129-3800	C	9412-9412		1						B		MN		
(B)	897101-5021		9501-		1						B		MN		
107	SHAFT; IDLE GEAR														
	894139-7581		9503-		1	ABCDE	FGHIJ	KLMNO	PQRST	U	ZA CD	EFGHI	J	QRS	
	897020-5690		9503-		1					V					

0-14 A CAMSHAFT AND VALVE

FIG-NO.

Model: 4JB1 (applicability columns A B C D E F G H I J K L M N O P Q R S T U V W X Y Z A B C D E F G H I J K L M N O P Q R S T U V W X)

KEY NO	PART NAME / PART NUMBER	ITC	APPLIED DATE	LR	QTY	Applicable models (4JB1)	Remarks
107	SHAFT; IDLE GEAR						
	894170-1170		9503-		1	WX KL OP	
	897020-5690	C	9412-9412		1	B MN	
	897115-1290		9501-		1	B MN	
109	SHAFT; IDLE GEAR						
	894109-9131		9503-		1	ABCDE FGHIJ KLMNO PQRST U ZA CD EFGHI J QRS	
	894129-3260		9503-		1	VWX KL OP	
	894129-3260	C	9412-9412		1	B MN	
	897089-9320		9501-		1	B MN	
111	COLLAR; THRUST, IDLER GEAR						
	894141-9371		9503-		1	ABCDE FGHIJ KLMNO PQRST U ZA CD EFGHI J QRS	
	512535-0051		9503-		1	V	
	894171-2890		9503-		1	WX B KLMN OP	
112	GEAR; IDLER						
	894450-0971		9503-		1	ABCDE FGHIJ KLMNO PQRST U ZA C	
	894402-0040		9503-		1	VWX KL OP	
	897020-5670	C	9412-9412		1	B MN	
	897115-1310		9501-		1	B MN	
	894139-7590	A	9503-9611		1	D EFG I J QRS	
	894328-2170		9801-		1	F H	
	897164-7730		9612-		1	D E G I J QRS	
	897164-7730	C	9612-9712		1	F	
113	GEAR; IDLE						
	894369-6420		9503-		1	ABCDE FGHIJ KLMNO PQRST U ZA C QRS	
	894129-3240		9503-		1	V	
	894170-1180		9503-		1	WX KL OP	
	894139-7610		9503-		1	D E G I J	
	894139-7610		9503-9712		1	F	
204	BOLT; IDLE GEAR SHAFT						
	901065-8650		9503-		2	V B MN	M8X65
	901065-8600		9503-		2	WX KL OP	M8X60
219	WASHER; LK, SHAFT						
	909150-8080		9503-		2	VWX B KLMN OP	ID=8
225	WASHER; PL, THRUST COLLAR & IDLE GEAR						
	909164-6080		9503-		2	B MN	ID=8 PL WASHER
226	SPRING; CMPR, ROCKER ARM						
	894433-3030		9503-		3	ABCDE FGHIJ KLMNO PQRST UVWX ZABCD EFGHI JKLMN OPQRS	

CAMSHAFT AND VALVE

0-14 B

FIG-NO.

KEY. NO	PART NAME / PART NUMBER	I T C	APPLIED DATE	L R	QTY	4JB1	A-4JB1	Remarks
						PPPPPPPPPPPPPPPP PPTTTT YYYYYVVVWWWWWWWW TTPPPP 0000 00 0000000 QQBKKX 1234 12 2346789 0 0 1 1	PPPPPPPPPPPPPPPPPPPPP AAAAAAAAAAAAAAAAAAYYY AAAAAAAAAAAAAAAAWAAAA 00000000011111110 000 12345678901234511 123
						ABCDEFGHIJKLMNOPQRSTUVWXY	ZABCDEFGHIJKLMNOPQRSTUVWX	
1	CAMSHAFT							
	894127-7974		9503-		1	ABCDEFGHIJKLMNOP RS UVW	ZABCDEFGHIJKLMNOPQRST	
	894434-9052		9503-		1	T		
4	VALVE: INL							
	894133-2751		9503-		4	ABCDEFGHIJKLMNOP	ZABCDEFGHIJKLMNOPQRST	
	897021-1170		9503-		4	RSTUVW		
5	VALVE: EXH							
	894247-8751		9503-		4	ABCDEFGHIJKLMNOP	ZABCDEFGHIJKLMNOPQRST	
	894433-2450		9503-		4	RSTUVW		
9	GEAR: CM/SHF							
	894326-3510		9503-		1	AB DEFGHIJKLM OP		
	894328-4480		9503-		1	C K R		
	897020-7430		9503-		1	N RST		
	897079-2120		9503-		1	W		Z=42
	894324-3360		9503-		1	UV	ZABCDEFGHIJ LMNOPQ ST VW	
10	PLATE: THRUST							
	894110-4801		9503-		1	ABCDEFGHIJKLMNOP RSTUVW	ZABCDEFGHIJKLMNOPQRST	
11	BOLT: THRUST PLATE TO C/BL							
	050040-8160		9503-		2	ABCDEFGHIJKLMNOP RSTUVW	ZABCDEFGHIJKLMNOPQRST	M8X16 W/LK WASHER
14	KEY: CM/SHF							
	908000-7180		9503-		1	ABCDEFGHIJKLMNOP RSTUVW	ZABCDEFGHIJKLMNOPQRST	
28	BOLT: CAM PULLEY							
	509000-0690		9503-		1	ABCDEFGHIJKLMNOP RSTUVW	ZABCDEFGHIJKLMNOPQRST	M12X47
45	WASHER: GEAR CAM							
	512519-0021		9503-		1	ABCDEFGHIJKLMNOP RSTUVW	ZABCDEFGHIJKLMNOPQRST	
53	SHAFT: ROCKER ARM							
	894152-3460		9503-		1	ABCDEFGHIJKLMNOP RSTUVW	ZABCDEFGHIJKLMNOPQRST	
55	PLUG: ROCKER SHAFT END							
	912626-0050		9503-		2	ABCDEFGHIJKLMNOP RSTUVW	ZABCDEFGHIJKLMNOPQRST	
56	RING: SNAP. ROCKER ARM							
	909180-0190		9503-		2	ABCDEFGHIJKLMNOP RSTUVW	ZABCDEFGHIJKLMNOPQRST	
65	COLLAR: SPLIT							
	512565-0040		9503-		16	ABCDEFGHIJKLMNOP RSTUVW	ZABCDEFGHIJKLMNOPQRST	
69	SPRING: VLV. OUTER							
	894252-5361		9503-		8	ABCDEFGHIJKLMNOP RSTUVW	ZABCDEFGHIJKLMNOPQRST	
71	SEAT: SPR							
(A)	512563-0010		9503-		8	ABCDEFGHIJKLMNOP RSTUVW	ZABCDEFGHIJKLMNOPQRST	OD=34
(B)	894133-7312		9503-		8	ABCDEFGHIJKLMNOP RSTUVW	ZABCDEFGHIJKLMNOPQRST	OD=32.8
78	ARM: ROCKER							
	894152-3440		9503-		8	ABCDEFGHIJKLMNOP RSTUVW	ZABCDEFGHIJKLMNOPQRST	

0-14 B CAMSHAFT AND VALVE

FIG-NO.

KEY NO	PART NAME / PART NUMBER	ITC	APPLIED DATE	LR	QTY	4JB1 PPPPPPPPPPPPPPPP PPTTTT YYYYYVVVWWWWWWWW TTPPPP 0000 00 00000000 00BKKX 1234 12 2346789 0 0 1 1 ABCDEFGHIJKLMNOPQRSTUVWXY	A-4JB1 PPPPPPPPPPPPPPPPPPPPP AAAAAAAAAAAAAAAAAAYYYY AAAAAAAAAAAAAAAAWAAAA 000000000111111 0 000 123456789012345 1 123 ZABCDEFGHIJKLMNOPQRSTUVWX	Remarks
81	SCREW; ADJ, ROCKER ARM							
	894152-2831		9503-		8	ABCDEFGHIJKLMNOP RSTUVW	ZABCDEFGHIJKLMNOPQRST	M8X30
83	NUT; ADJ SCREW, LK							
	909111-5080		9503-		8	ABCDEFGHIJKLMNOP RSTUVW	ZABCDEFGHIJKLMNOPQRST	M8
84	BRACKET; ROCKER SHAFT, INTER							
	894152-3451		9503-		4	ABCDEFGHIJKLMNOP RSTUVW	ZABCDEFGHIJKLMNOPQRST	
85	BOLT; BRKT							
	894433-3020		9503-		1	ABCDEFGHIJKLMNOP RSTUVW	ZABCDEFGHIJKLMNOPQRST	M10X60
87	BOLT; ROCKER SHAFT							
	894433-3040		9503-		3	ABCDEFGHIJKLMNOP RSTUVW	ZABCDEFGHIJKLMNOPQRST	M8X15 & M10X60 L=82
88	ROD; PUSH							
	894143-2020		9503-		8	ABCDEFGHIJKLMNOP RSTUVW	ZABCDEFGHIJKLMNOPQRST	
89	TAPPET; VALVE							
	894438-3050		9503-		8	ABCDEFGHIJKLMNOP RSTUVW	ZABCDEFGHIJKLMNOPQRST	
94	WASHER; PL, BRKT							
	909164-0100		9503-		4	ABCDEFGHIJKLMNOP RSTUVW	ZABCDEFGHIJKLMNOPQRST	
101	BOLT; THRUST COLLAR							
	509000-0841		9503-		2	UV		
104	BOLT; SHAFT IDLE							
	894109-7061		9503-		1	AB DEFGHIJKLM OP UVW	ZABCDEFGHIJ LMNOPQ ST	
	894129-3840		9503-		1	C N RST	K R	
106	WASHER; IDLE GEAR SHAFT							
(A)	897020-6750		9412-9412		2	C		
(A)	897089-8450		9501-		2	C	K R	
(A)	509503-0820		9503-		2	N RST		
(B)	512519-0021		9503-		1	AB DEFGHIJKLM OP UVW	ZABCDEFGHIJ LMNOPQ ST	
(B)	894129-3800		9503-		1	N RST		
(B)	894129-3800		9412-9412		1	C		
(B)	897101-5021		9501-		1	C	K R	
107	SHAFT; IDLE GEAR							
	894139-7581		9503-		1	AB DEFGHIJKLM OP UVW	ZABCDEFGHIJ LMNOPQ ST	
	897020-5690		9412-9412		1	C		
	897115-1290		9501-		1	C	K R	
	894170-1170		9503-		1	N RST		
	897020-5670		9412-9412		1	C		
109	SHAFT; IDLE GEAR							
	894109-9131		9503-		1	AB DEFGHIJKLM OP UVW	ZABCDEFGHIJ LMNOPQ ST	
	894129-3260		9503-		1	N RST		
	894129-3260		9412-9412		1	C		
	897089-9320		9501-		1	C	K R	
111	COLLAR; THRUST, IDLER GEAR							
	894141-9371		9503-		1	AB DEFGHIJKLM OP UVW	ZABCDEFGHIJ LMNOPQ ST	

CAMSHAFT AND VALVE

FIG-NO. **0-14 B**

Model columns:

	4JB1	A-4JB1
Models	PY, PY01, PY02, PY03, PY04, PV, PV01, PV02, PW, PW02, PW03, PW04, PW06, PW07, PW08, PW09, —, PT0, PT001, PPB, TPK, TPK01, TPX	PAA, PAA01, PAA02, PAA03, PAA04, PAA05, PAA06, PAA07, PAA08, PAA09, PAA10, PAA11, PAA12, PAA13, PAA14, PAA15, PAW01, PYA, PYA01, PYA02, PYA03
Column letters	A B C D E F G H I J K L M N O P Q R S T U V W X Y	Z A B C D E F G H I J K L M N O P Q R S T U V W X

KEY NO	PART NAME / PART NUMBER	ITC	APPLIED DATE	LR	QTY	4JB1	A-4JB1	Remarks
111	COLLAR: THRUST, IDLER GEAR							
	894171-2890		9503-		1	C N RST	K R	
112	GEAR: IDLER							
	894450-0971		9503-		1	AB DEFGHIJKLM OP		
	897115-1310		9501-		1	C	K R	
	894402-0040		9503-		1	N RST		
	894139-7590	A	9503-9611		1	W		
	897164-7730		9612-		1	W		
	894328-2170		9503-		1	UV	ZABCDEFGHIJ LMNOPQ ST	
113	GEAR: IDLE							
	894139-7610		9503-		1	W		
	894369-6420		9503-		1	AB DEFGHIJKLM OP		
	894170-1180		9503-		1	N RST		
204	BOLT: IDLE GEAR SHAFT							
	509000-0841		9503-		2	AB DEFGHIJKLM OP W	ZABCDEFGHIJ LMNOPQ ST	M8X55 W/LK WASHER
	901065-8650		9503-		2	C	K R	M8X65
	901065-8600		9503-		2	N RST		M8X60
219	WASHER: LK, SHAFT							
	909150-8080		9503-		2	C N RST	K R	ID=8
225	WASHER: PL, THRUST COLLAR & IDLE GEAR							
	909164-6080		9503-		2	C	K R	ID=8 PL WASHER
226	SPRING: CMPR, ROCKER ARM							
	894433-3030		9503-		3	ABCDEFGHIJKLMNOP RSTUVW	ZABCDEFGHIJKLMNOPQRST	

0-15	CRANKSHAFT,PISTON AND FLYWHEEL
FIG-NO.	(NO.1)

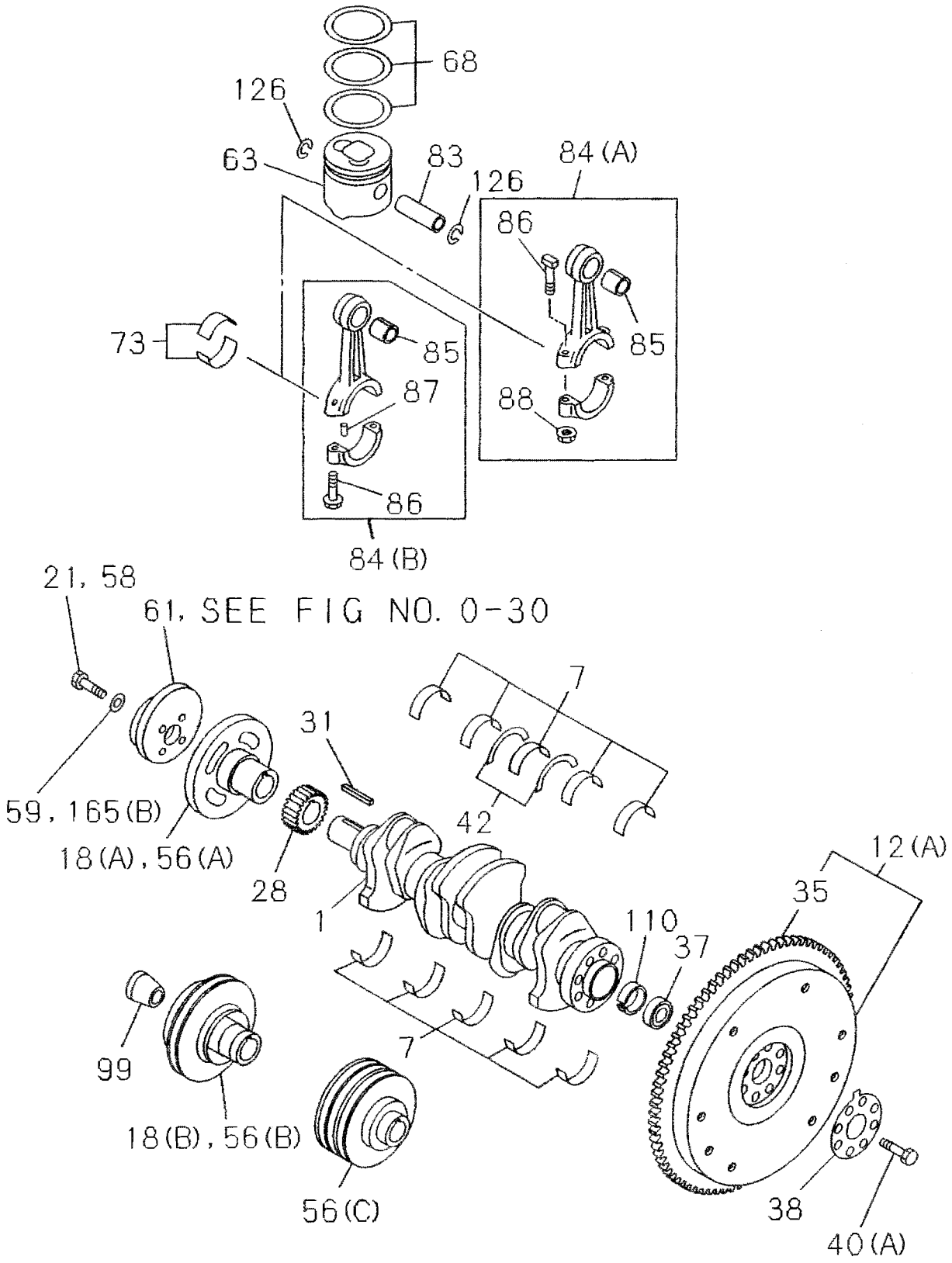

CRANKSHAFT,PISTON AND FLYWHEEL

(NO.2)

0-15

FIG-NO.

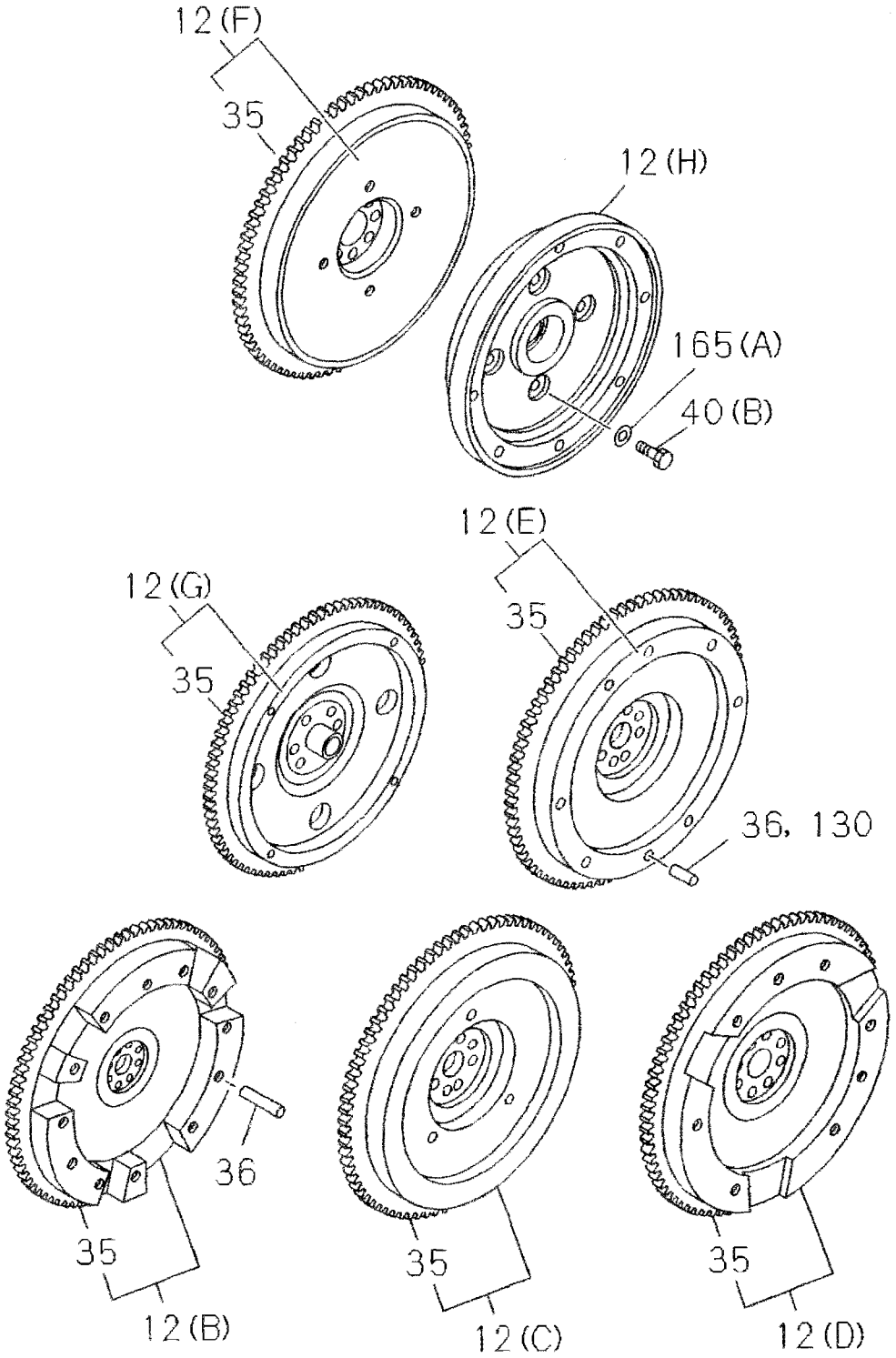

015A0250796

0-15 A CRANKSHAFT,PISTON AND FLYWHEEL

FIG-NO.

KEY. NO	PART NAME / PART NUMBER	ITC	APPLIED DATE	LR	QTY	4JB1 (ABCDE FGHIJ KLMNO PQRST UVWXY ZABCD EFGHI JKLMN OPQRS TUVWX)	Remarks
1	CRANKSHAFT						
	894443-6620		9503-		1	ABCDE FGHIJ KLMNO PQRST UVWX ZABCD EFGHI JKLMN OPQRS	
7	METAL KIT: CRANKSHAFT, STANDARD						
	894168-5520		9503-		1	ABCDE FGHIJ KLMNO PQRST UVWX ZABCD EFGHI JKLMN OPQRS	
12	FLYWHEEL						
(A)	894319-3483		9503-		1	F	
(A)	894389-7660		9503-		1	KL	
(B)	894406-3641		9503-		1	V	
(B)	897047-8740		9503-		1	WX	
(C)	897064-4670		9503-		1	AB J NO Q Q	
(C)	897064-4650		9503-		1	CDE I M P R T U	
(C)	894476-7320		9503-		1	G	
(C)	894125-7614		9503-		1	KL MN OP RS	
(C)	894362-3080		9503-		1	C	
(D)	894375-0740		9503-		1	B	
(E)	894410-4072		9503-		1	S F	
(E)	894431-4702		9712-		1	H	
(G)	897040-7560		9503-		1	H ZA	
18	PULLEY; CR/SHF						
(A)	894129-3792		9503-		1	V	
(B)	894320-8220		9503-		1	F	
(B)	894376-1862		9503-		1	WX	
(B)	894328-5032		9503-		1	B MN	
(B)	894171-8971		9503-		1	KL OP	
28	GEAR; CR/SHF						
	512521-0250		9503-		1	ABCDE FGHIJ KLMNO PQRST U ZA C	
	894172-3650		9503-		1	VWX KL OP	
	894328-4470		9503-		1	B MN	
	894139-7540		9503-		1	D E G I J QRS	Z=21
	894139-7540	C	9503-9710		1	F	Z=21
	894324-3350		9711-		1	F H	Z=21
31	KEY; FEATHER, CR/SHF						
	908030-7430		9503-		1	ABCDE FGHIJ KLMNO PQRST UV ZABCD EFGHI JKLMN OPQRS	
	894448-8891		9503-		1	WX	
35	GEAR; RING						
	894419-6020		9503-		1	ABCDE FGHIJ KLMNO PQRST U ZA C F H MN OPQRS	
	512333-0020	A	9503-9606		1	V	
	894468-4120		9607-		1	V	
	894171-2900		9503-		1	WX KL	
	912333-6031		9503-		1	B	
36	PIN; FLYWHEEL						
	908150-8250		9503-		3	WX	
	908150-8250		9510-		2	F	
37	BEARING; PILOT, TOP GEAR SHAFT						
	509801-0010		9503-		1	F	

CRANKSHAFT,PISTON AND FLYWHEEL

0-15 A

FIG-NO.

KEY. NO — PART NAME

Model: 4JB1

Applicability code columns (header, groups as printed):

```
PPPPP PPPPP PPPPP PPPPP PPPP  PPPPP PPPPP PPPPP PPPPP
AAAAA AAAAA AAAAA AAAAA ABBB  DDFHK KKKKK KLLLL LLNNN
 0000 00001 11111 11122 2 00   0    0000L L U00 00 00
 1234 56892 33456 78901 2 23   1    1234  0 G11 22 11
              U                           1  U  U  U
              G                             G  E  G
ABCDE FGHIJ KLMNO PQRST UVWXY ZABCD EFGHI JKLMN OPQRS TUVWX
```

KEY NO	PART NUMBER	ITC	APPLIED DATE	L/R	QTY	Applicability	Remarks
37	**BEARING: PILOT, TOP GEAR SHAFT**						
	900090-6790		9503-		1	KL VWX KLMN OPQRS	
	900090-0590		9503-		1	B	NSK
38	**WASHER: FLYWHEEL**						
	894142-1561		9503-		1	ABCDE FGHIJ KLMNO PQRST UVWX ZABC KLMN OPQRS	
	894133-9700		9503-		1	I	
	894133-9700	A	9503-9711		1	D EFG	
	894142-1561		9712-		1	D EFGH	
40	**BOLT: FLYWHEEL**						
(A)	894427-4560		9711-		8	H	M13X36
(A)	050061-0300		9712-		8	H	M13X36
(A)	897065-9841		9503-		8	ABCDE FGHIJ KLMNO PQRST U WX ZA CD EFG KLMN OPQRS	M13X36
(A)	894129-3720		9503-		8	V	
(A)	894371-9930		9503-		8	B I	
42	**WASHER: THRUST, CR/SHF**						
	894453-7620		9503-		1	ABCDE FGHIJ KLMNO PQRST UVWX ZABCD EFGHI JKLMN OPQRS	
56	**PULLEY: CR/SHF DAMPER**						
(B)	894429-7460		9503-		1	ABC IJ NO P Z C	2-GROOVE
(B)	894429-7460		9503-9805		1	DE R	2-GROOVE
(B)	894429-4230		9806-		1	DE R	1-GROOVE
(B)	894429-4230		9503-		1	H M Q ST U A	1-GROOVE
(B)	894429-4230		9407-9407		1	G	1-GROOVE
(B)	894429-7460		9408-		1	G	2-GROOVE
(B)	894419-4572		9503-		1	KL	3-GROOVE
(B)	894139-3402		9503-		1	D E	1-GROOVE
(B)	894453-5522		9503-		1	F H QRS	2-GROOVE
(B)	897020-2901		9503-		1	G	2-GROOVE
(C)	897038-4131		9503-		1	I J	2-GROOVE
58	**BOLT: CR/SHF PULLEY**						
	894433-4060		9503-9603		1	ABCDE FGHIJ KLMNO PQRST U ZA D EFG I J QRS	M16X29 FLANGE
	509000-2732		9604-		1	ABCDE FGHIJ KLMNO PQRST U ZA D EFGHI J QRS	M16X43
	909802-6060		9503-		1	ABCDE C	
	894153-7221		9503-		1	V B MN	
	509000-2732		9503-		1	KL OP	M16X43
	894314-0680		9503-		1	WX	
59	**WASHER: CR/SHF PULLEY**						
	509503-1270		9503-		1	ABCDE FGHIJ KLMNO PQRST UVWX ZABCD EFGHI JKLMN OPQRS	
	109503-0030		9503-		1	C	
63	**PISTON** *--ALSO INCLUDED IN LINER SET.)*						
	897176-6040		9503-		4	ABCDE FGHIJ KLMNO PQRST UVWX ZABCD EFGHI JKLMN OPQRS	GRADE=AX
	897176-6050		9503-		4	ABCDE FGHIJ KLMNO PQRST UVWX ZABCD EFGHI JKLMN OPQRS	GRADE=CX
68	**RING SET: PISTON, STANDARD** *--ALSO INCLUDED IN LINER SET.)*						
	894247-8671		9503-		4	ABCDE FGHIJ KLMNO PQRST UVWX ZABCD EFGHI JKLMN OPQRS	
73	**METAL SET: CONN ROD, STANDARD**						
	894324-1590		9503-		4	ABCDE FGHIJ KLMNO PQRST UVWX ZABCD EFGHI JKLMN OPQRS	

0-15 A CRANKSHAFT,PISTON AND FLYWHEEL

FIG-NO.

KEY. NO — PART NAME

KEY NO	PART NUMBER	ITC	APPLIED DATE	LR	QTY	4JB1 PPPPPPPPPPPPPPPPPPPPPPPP PPPPPPPPPPPPPPPPPPPPP AAAAAAAAAAAAAAAAAAAAABBB DDFHKKKKKKKLLLLLLNNN 0000000011111111122 2 00 0 0000LL U0000 00 1234568923345678901 2 23 1 1234 0 G1122 11 U 1 U U U G G F G ABCDEFGHIJKLMNOPQRSTUVWXYZABCDEFGHIJKLMNOPQRSTUVWX	Remarks
83	PIN: PISTON					--ALSO INCLUDED IN LINER SET)	
	894454-4790		9503-		4	ABCDEFGHIJKLMNOPQRSTUVWX ZABCDEFGHIJKLMNOPQRS	
84	ROD ASM; CONN						
(A)	894329-6921		9503-		4	ABCDEFGHIJKLMNOPQRSTUVWX ZABCDEFGHIJKLMNOPQRS	
85	BUSHING; CONNROD					--ALSO INCLUDED IN LINER SET)	
	894419-4550		9503-		4	ABCDEFGHIJKLMNOPQRSTUVWX ZABCDEFGHIJKLMNOPQRS	
86	BOLT; CONNROD						
	894419-7291	A	9408-9408		8	ABCDEFGHIJKLMNOPQRST VWX ZABCDEFG IJKLMNOPQRS	M11X59
	512235-0090		9409-		8	ABCDEFGHIJKLMNOPQRSTUVWX ZABCDEFGHIJKLMNOPQRS	M11X59
88	NUT; CONNROD						
	509409-0160		9503-		8	ABCDEFGHIJKLMNOPQRSTUVWX ZABCDEFGHIJKLMNOPQRS	
99	BUSHING; CRANKCASE						
	894319-3310		9503-		1	WX	
110	SPACER; BRG, CR/SHF						
	894173-9510		9503-		1	WX	
126	RING; SNAP, PISTON PIN					--ALSO INCLUDED IN LINER SET)	
	894133-9690		9503-		8	ABCDEFGHIJKLMNOPQRSTUVWX ZABCDEFGHIJKLMNOPQRS	

CRANKSHAFT,PISTON AND FLYWHEEL

0-15 B
FIG-NO.

KEY. NO — PART NAME

4JB1:
PPPPP PPPPP PPPPP P PPT TTT
YYYYY VVVWW WWWWW TTP PPP
0000 00 0000000 QQB KKX
1234 12 2346789 0 0
1 1

A-4JB1:
PPPPP PPPPP PPPPP PPPPP P
AAAAA AAAAA AAAAA AAYYY Y
AAAAA AAAAA AAAAA AWAAA A
00000000 11111 10 000
1234 56789 01234 51 123

KEY NO	PART NUMBER	ITC	APPLIED DATE	LR	QTY	4JB1 ABCDE	FGHIJ	KLMNO	PQRST	UVWXY	A-4JB1 ZABCD	EFGHI	JKLMN	OPQRS	TUVWX	Remarks
1	CRANKSHAFT															
	894443-6620		9503-		1	ABCDE	FGHIJ	KLMNO	P RST		ZABCD	EFGHI	JKLMN	OPQRS	T	
	894453-5252		9503-		1					UVW						
7	METAL KIT: CRANKSHAFT.STANDARD															
	894168-5520		9503-		1	ABCDE	FGHIJ	KLMNO	P RST	UVW	ZABCD	EFGHI	JKLMN	OPQRS		
12	FLYWHEEL															
(A)	894476-7320		9503-		1						A	EF	MN	O		
(A)	897040-7560		9503-		1						C					
(B)	897047-8740		9503-		1				T							
(C)	897064-4650		9503-		1	ABCDE					Z B D	GHI	L	QRS	T	
(C)	897021-4012		9712-		1								K			
(E)	894410-4072		9503-		1				RS							
(E)	894410-4072		9801-		1					U	A		J M			
(F)	894431-4702		9503-		1		FGHIJ	KLMNO	P	VW				P		
(H)	512331-0501		9503-		1		F IJ	K M		W						
(H)	894175-4091		9503-		1		GH	N		V				P		
18	PULLEY: CR/SHF															
(B)	894376-1862		9503-		1			N								
(B)	894320-8220		9503-		1			O								
(B)	894381-3042		9503-		1				RST							
(B)	897128-3971		9805-		1								K			
21	BOLT: PULLEY FIX															
	050040-6120		9805-		4					U						
	050040-6500		9805-		4					V						
28	GEAR: CR/SHF															
	512521-0250		9503-		1	AB DE	FGHIJ	KLM O	P							
	894328-4470		9503-		1	C							K	R		
	894172-3650		9503-		1			N	RST							
	894139-7540		9503-		1					W						Z=21
	894324-3350		9503-		1					UV	ZABCD	EFGHI	J LMN	OPQ S	T	
31	KEY: FEATHER.CR/SHF															
	908030-7430		9503-		1	ABCDE	FGHIJ	KLM O	P RST	UVW	ZABCD	EFGHI	JKLMN	OPQRS	T	
	894448-8891		9503-		1			N								
35	GEAR: RING															
	894419-6020		9503-		1	ABCDE	FGHIJ	KLMNO	P RS	UVW	ZABCD	EFGHI	JKLMN	OPQRS	T	
	894171-2900		9503-		1				T							
36	PIN: FLYWHEEL															
	908150-6250		9503-		2				RS							
	908150-8250		9503-		3				T							
	909878-5320		9805-		2								K			
37	BEARING: PILOT.TOP GEAR SHAFT															
	900090-6790		9503-		1				T				K			
38	WASHER: FLYWHEEL															
	894142-1561		9503-		1	ABCDE	FGHIJ	KLMNO	P RST	UVW	ZABCD	EFGHI	J LMN	OPQRS	T	

0-15 B CRANKSHAFT, PISTON AND FLYWHEEL

FIG-NO.

Model code header (4JB1): PPPPP PPPPP PPPPP P PPT TTT / YYYYY VVVWW WWWWW W TTP PPP / 0000 00 0000000 00B KKX / 1234 12 2346789 0 0 / 1 1 — columns ABCDE FGHIJ KLMNO PQRST UVWXY

Model code header (A-4JB1): PPPPP PPPPP PPPPP PPPPP P / AAAAA AAAAA AAAAA AAYYY Y / AAAAA AAAAA AAAAA AWAAA A / 0000 00000 11111 10 000 / 1234 56789 01234 51 123 — columns ZABCD EFGHI JKLMN OPQRS TUVWX

KEY NO	PART NAME / PART NUMBER	ITC	APPLIED DATE	LR	QTY	4JB1	A-4JB1	Remarks
38	WASHER: FLYWHEEL							
	894133-9700		9805-		1		K	
40	BOLT: FLYWHEEL							
(A)	897065-9841		9503-		8	ABCDE RSTU	ZABCDEFGHIJKLMNO QRST	M13X36
(A)	894427-4560		9503-		8	FGHIJKLMNOP VW	P	
(B)	902061-0320		9503-		4	FGHIJK MN W		M10X32
(B)	050061-0300		9806-		4		P	M10X32
42	WASHER: THRUST, CR/SHF							
	894453-7620		9503-		1	ABCDEFGHIJKLMNOP RSTUVW	ZABCDEFGHIJKLMNO QRS	
56	PULLEY: CR/SHF DAMPER							
(A)	894429-4230		9503-		1	P	C	1-GROOVE
(B)	894429-7460		9503-		1	AB DEFGHIJKLM	ZAB DEF H LMN PQ ST	2-GROOVE
(B)	894429-7460		9503-9805		1		G	2-GROOVE
(B)	894429-4230		9806-		1		G IJ O	1-GROOVE
(B)	894453-5510	A	9503-9505		1	W		2-GROOVE
(B)	894453-5521	A	9505-9606		1	W		2-GROOVE
(B)	894453-5522		9607-		1	VW		2-GROOVE
(B)	894139-3402		9711-		1	U		1-GROOVE
(C)	897071-8660	C	9503-9610		1	C	R	2-GROOVE
(C)	897168-0730		9611-		1	C	R	2-GROOVE
58	BOLT: CR/SHF PULLEY							
	894433-4060		9503-9603		1	AB DEFG IJKLM OP W	ZA Q	M16X29 FLANGE
	509000-2732		9604-		1	AB DEFGHIJKLM OP UVW	ZABCDEFGHIJ LMNOPQRST	M16X43
	894153-7221		9503-		1	C	K	
	894314-0680		9503-		1	N RST		
	894153-7221		9503-		1		R	
59	WASHER: CR/SHF PULLEY							
	509503-1270		9503-		1	ABCDEFGHIJKLMNOP RSTUVW	ZABCDEFGHIJKLMNOPQRST	
61	PULLEY: FAN DRIVE							
	894427-3602		9705-		1	UV		
63	PISTON —ALSO INCLUDED IN LINER SET							
	897176-6040		9503-		4	ABCDEFGHIJKLMNOP		GRADE=AX
	897176-6050		9503-		4	ABCDEFGHIJKLMNOP		GRADE=CX
	897176-6020		9503-		4	RSTUVW		GRADE=AX
	897176-6030		9503-		4	RSTUVW		GRADE=CX
	897176-8500		9503-		4		ZABCDEFGHIJKLMNOPQRST	GRADE=AX
	897176-8510		9503-		4		ZABCDEFGHIJKLMNOPQRST	GRADE=CX
68	RING SET: PISTON, STANDARD —ALSO INCLUDED IN LINER SET							
	894247-8671		9503-		4	ABCDEFGHIJKLMNOP	ZABCDEFGHIJKLMNOPQRST	
	897029-8640		9503-		4	RSTUVW		
73	METAL SET: CONN ROD, STANDARD							
	894324-1590		9503-		4	ABCDEFGHIJKLMNOP RSTUVW	ZABCDEFGHIJKLMNOPQRST	
83	PIN: PISTON —ALSO INCLUDED IN LINER SET							
	894454-4790		9503-		4	ABCDEFGHIJKLMNOP	ZABCDEFGHIJKLMNOPQRST	

CRANKSHAFT,PISTON AND FLYWHEEL

0-15 B
FIG-NO.

KEY. NO	PART NAME / PART NUMBER	ITC	APPLIED DATE	LR	QTY	4JB1	A-4JB1	Remarks
						PPPPP PPPPP PPPPP P PPT TTT YYYYY VVVWW WWWWW W TTP PPP 0000 00 0 000000 0 QQB KKX 1234 12 2 346789 0 0 1 1 ABCDE FGHIJ KLMNO PQRST UVWXY	PPPPP PPPPP PPPPP PPPPP P AAAAA AAAAA AAAAA AAYYY Y AAAAA AAAAA AAAAA AWAAA A 0000 00000 11111 10 00 0 1234 56789 01234 51 12 3 ZABCD EFGHI JKLMN OPQRS TUVWX	
83	PIN: PISTON					--ALSO INCLUDED IN LINER SET.		
	894457-0080		9503-		4	R S T U V W		
84	ROD ASM: CONN							
(A)	894329-6921		9503-		4	A B C D E F G H I J K L M N O P	Z A B C D E F G H I J K L M N O P Q R S T	
(B)	897062-3000		9503-		4	R S T U V W		
85	BUSHING: CONNROD					--ALSO INCLUDED IN LINER SET.		
	894419-4550		9503-		4	A B C D E F G H I J K L M N O P	Z A B C D E F G H I J K L M N O P Q R S T	
	894457-1580		9503-		4	R S T U V W		
86	BOLT: CONNROD							
	512235-0090		9409-		8	A B C D E F G H I J K L M N O P	Z A B C D E F G H I J K L M N O P Q R S T	M11X59
	897062-0860		9503-		8	R S T U V W		M11X44.5
	894419-7291	A	9408-9408		8	A B C D F G I J K L M N O		M11X59
87	PIN: CONNROD BIG END							
	908160-5080		9503-		8	R S T U V W		
88	NUT: CONNROD							
	509409-0160		9503-		8	A B C D E F G H I J K L M N O P	Z A B C D E F G H I J K L M N O P Q R S T	
99	BUSHING: CRANKCASE							
	894319-3310		9503-		1	N		
110	SPACER: BRG. CR/SHF							
	894173-9510		9503-		1	T		
126	RING: SNAP. PISTON PIN					--ALSO INCLUDED IN LINER SET.		
	894133-9690		9503-		8	A B C D E F G H I J K L M N O P	Z A B C D E F G H I J K L M N O P Q R S T	
	894460-6870		9503-		8	R S T U V W		
130	PIN: STRAIGHT							
	909878-5320		9711-		2	U		OD=6 L=24
165	WASHER: PL							
(A)	909851-8660		9503-		4	F G H I J K M N W		
(B)	909160-6060		9711-		8	U		

0-20	TIMING GEAR CASE AND FLYWHEEL HOUSING
FIG-NO.	(NO.1)

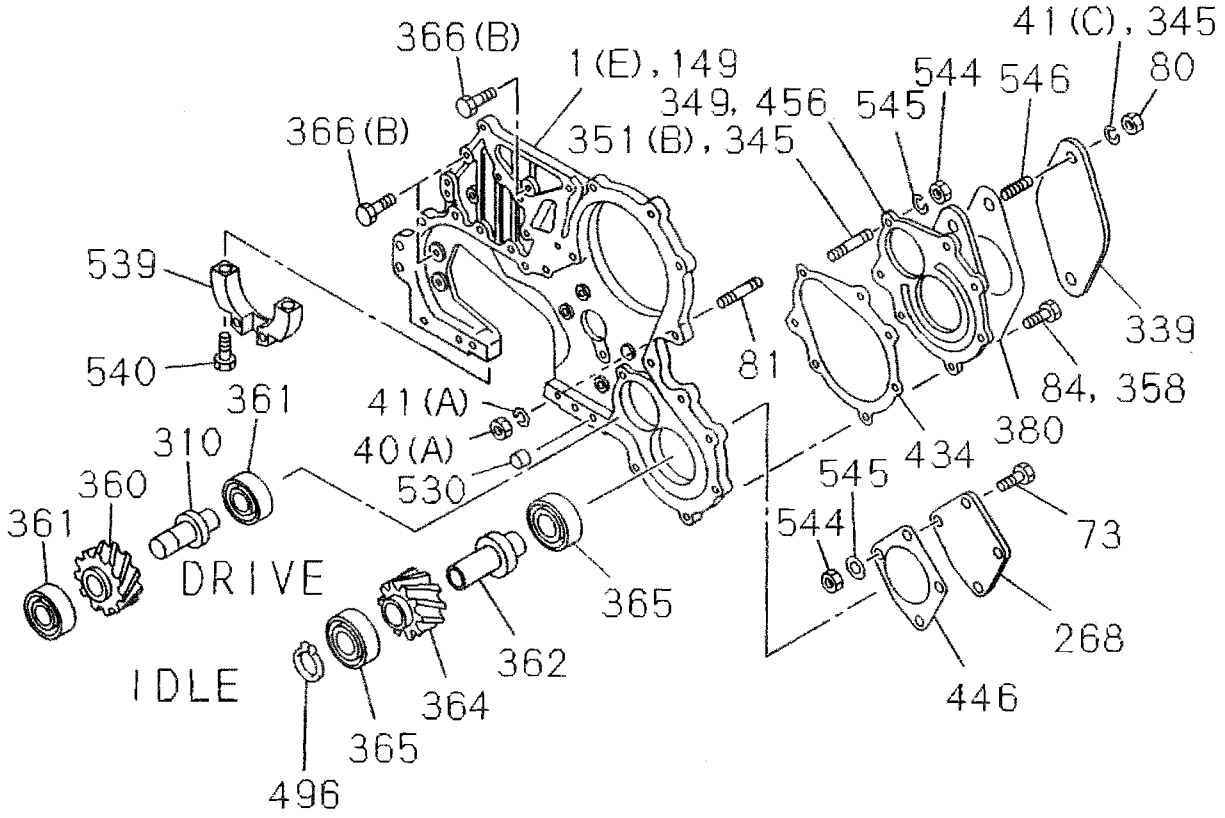

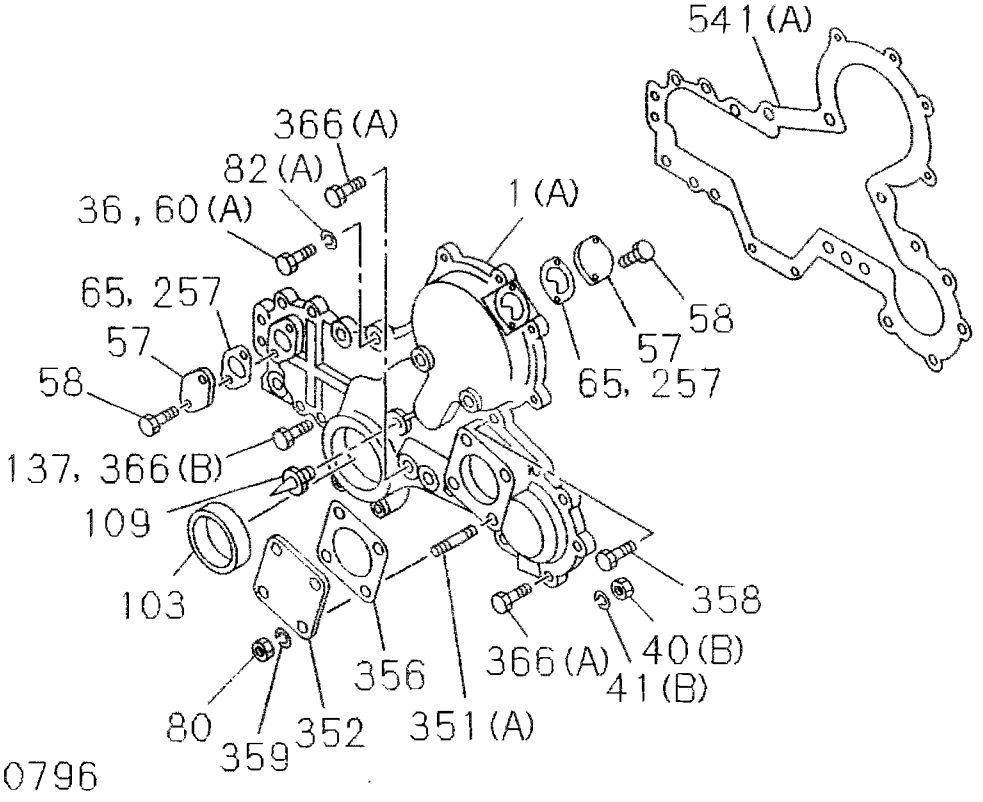

020A0150796

TIMING GEAR CASE AND FLYWHEEL HOUSING

(NO.2)

0-20

FIG-NO.

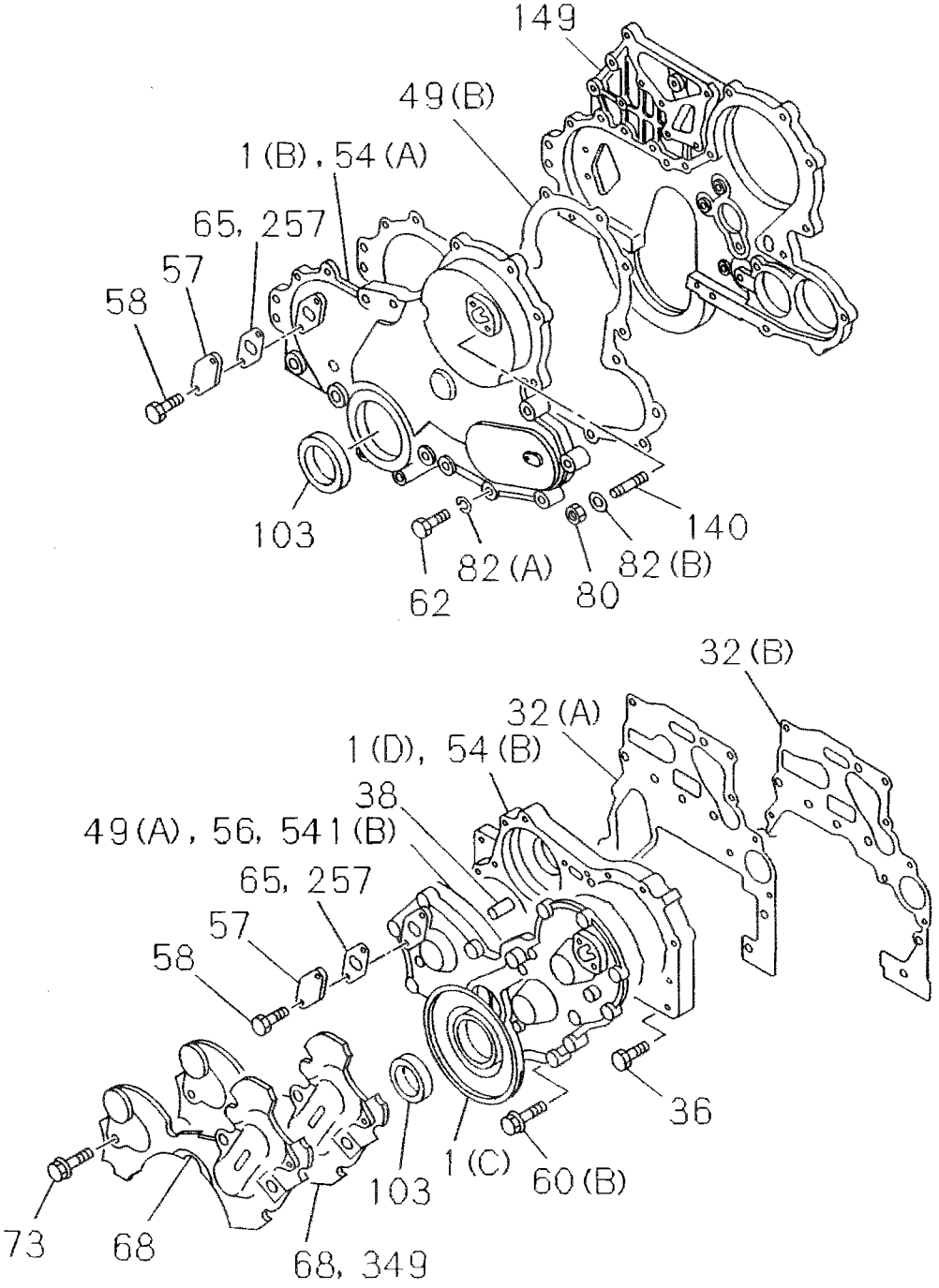

020A0250796

0-20	TIMING GEAR CASE AND FLYWHEEL HOUSING
FIG-NO.	(NO.3)

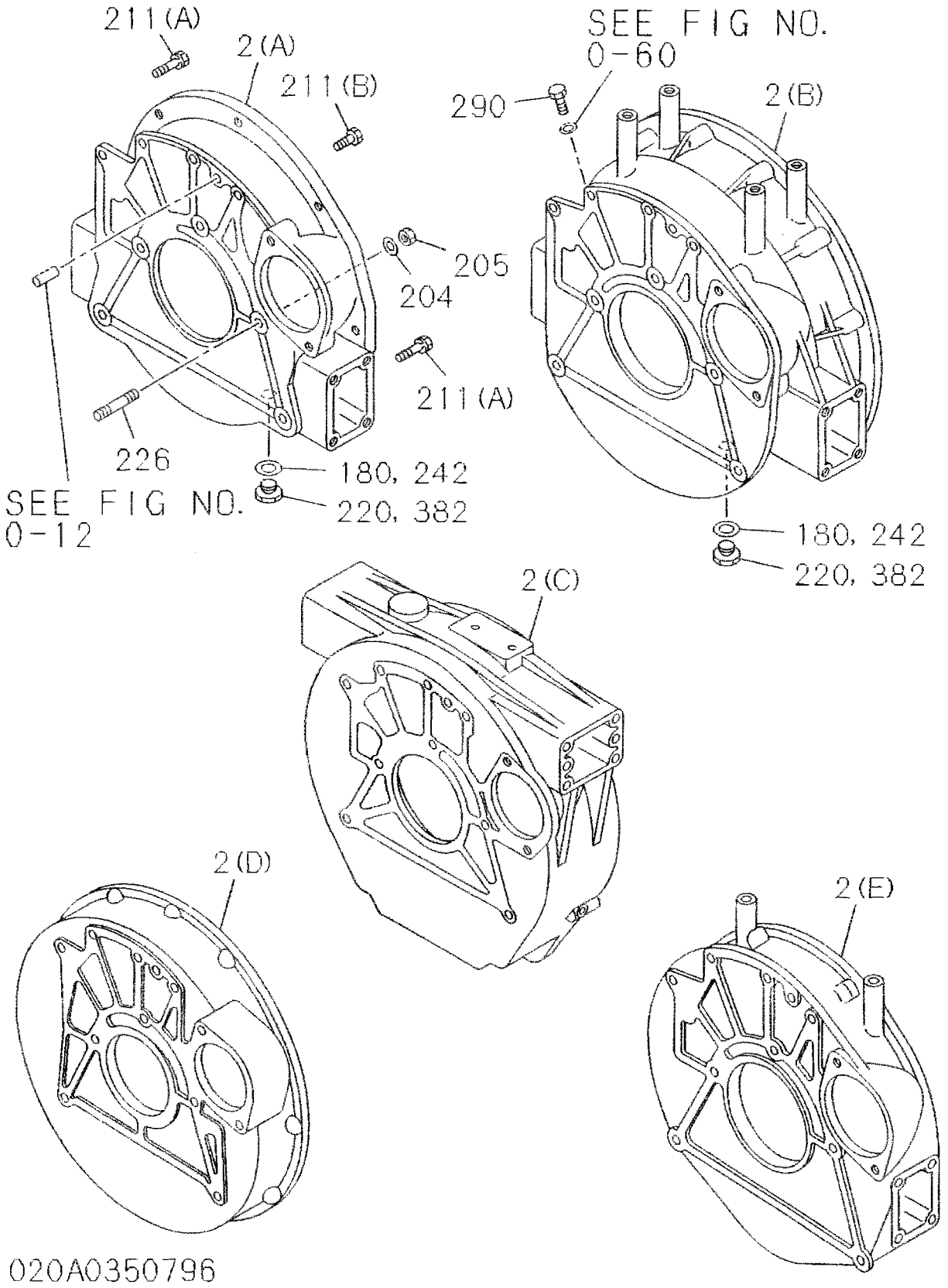

TIMING GEAR CASE AND FLYWHEEL HOUSING

(NO.4)

0-20

FIG-NO.

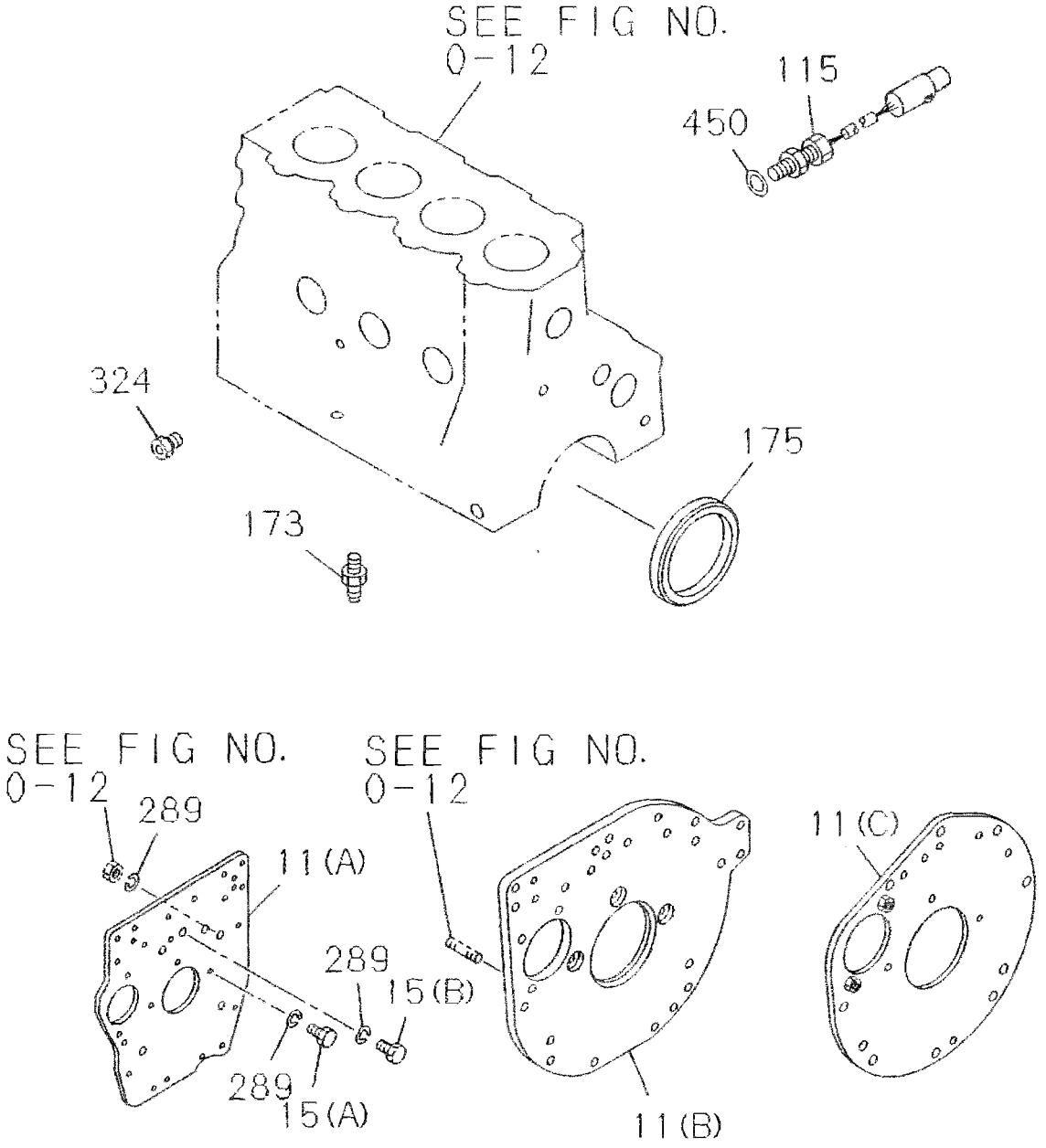

020A0450796

0-20 A TIMING GEAR CASE AND FLYWHEEL HOUSING

FIG-NO

KEY. NO	PART NAME / PART NUMBER	I/C	APPLIED DATE	L/R	QTY	4JB1 ABCDE	FGHIJ	KLMNO	PQRST	UVWXY	ZABCD	EFGHI	JKLMN	OPQRS	TUVWX	Remarks
						PPPPP AAAAA _0000 _1234	PPPPP AAAAA 00001 56892	PPPPP AAAAA 11111 33456 U G	PPPPP AAAAA 11122 78901	PPPP_ ABBB_ 2_00_ 2_23_	PPPPP DDFHK _0___ _1___	PPPPP KKKKK 0000L 1234_	PPPPP KLLLL 0_U00 0_611 1___U G	PPPPP LLNNN 00_00 22_11 U_U_U E G		
1	CASE: TIMING GEAR															
(A)	894142-1541		9503-		1					V						
(B)	894440-3833		9503-		1					WX						
(C)	894428-5361		9503-		1								KL	OP		
(D)	894428-7993		9503-		1	ABCDE	FGHIJ	KLMNO	PQRST	U	ZA C					
(D)	894155-3613	A	9503-9503		1						D	EFG		QRS		
(D)	897129-9821		9504-		1						D	EFGH		QRS		
(D)	897045-9230		9503-		1							I	J			
(E)	897020-5651		9412-9412		1						B		MN			
(E)	897123-1201		9501-		1						B		MN			
2	HOUSING: FLYWHEEL															
(A)	894422-8787		9503-		1	AB	H J	NO	PQ					Q		
(A)	894318-4074		9503-		1	CDE	I	M	RST							
(A)	894320-4413		9503-		1					U						
(B)	894441-9473		9503-		1						C					
(C)	894343-9271	C	9503-9703		1						B					
(C)	897178-7460		9704-		1						B					
(D)	511341-0050		9503-		1								KL			
(E)	894341-5310		9503-		1						ZA	F				
(B)	897078-9240		9711-		1							H				
11	PLATE: RR. C/BL															
(A)	894129-3051		9503-		1					V						
(B)	897028-9060		9503-		1					WX						
(C)	894418-1553	C	9503-9605		1		FG									
(C)	897160-6290		9606-		1		FG									
(C)	894437-9232		9503-		1			KL					MN	RS		
(C)	511341-0031		9503-		1									OP		
15	BOLT: RR PLATE TO C/BL															
(A)	509000-2270		9503-		3		FG	KL					MN	OP RS		M12X25
(A)	509000-2770		9503-		3					V						
(A)	894175-2760		9503-		3					WX						
(A)	050041-2300		9503-		2		FG									M12X30 W/LK WASHER
(A)	050041-2250		9503-		2			KL						OP		M12X25 W/LK WASHER
(A)	902361-2360		9503-		2					VWX						
(B)	509000-2270		9503-		3		FG	KL					MN	OP RS		M12X25
(B)	050041-0250		9503-		3		FG									M10X25 W/LK WASHER
(B)	050041-2300		9503-		2		FG									M12X30 W/LK WASHER
(B)	050041-0220		9503-		3			KL						OP		M10X22 W/LK WASHER
(B)	050041-2250		9503-		2			KL						OP		M12X25 W/LK WASHER
(B)	902061-0300		9503-		3					VWX						M10X30 W/LK WASHER
(B)	902361-2360		9503-		2					VWX						
(B)	509000-2770		9503-		3					V						
32	GASKET: GEAR CASE TO C/BL —ALSO INCLUDED IN GASKET SET(ENGINE)															
(A)	894475-0120		9503-		1	ABCDE	F HIJ	KLMNO	P RST		Z CD	EFG		QRS		
(A)	894475-0120	C	9406-9406		1		G									
(A)	897089-8810		9407-		1		G									
(A)	897023-3680		9503-		1				Q							
(A)	894129-3361		9503-		1					VWX	B	I	JKLMN	OP		
(A)	897066-7390	C	9403-9403		1						A					

TIMING GEAR CASE AND FLYWHEEL HOUSING

0-20 A

FIG-NO.

KEY. NO — PART NAME

4JB1

KEY NO	PART NUMBER	ITC	APPLIED DATE	LR	QTY	Applicability (A–Y)	Applicability (Z–X)	Remarks
32	**GASKET: GEAR CASE TO C/BL** —ALSO INCLUDED IN GASKET SET(ENGINE)							
(A)	897089-8810		9404-		1		A	
(A)	897046-4690	C	9404-9502		1		DEFG	
(A)	897117-2420		9503-		1	ABCDEFGHIJKLMNOPQRSTUVWX	ZABCDEFGHIJKLMNOPQRS	
36	**BOLT: GEAR CASE**							
	010806-2650		9503-		1	V		M12X65
	010806-2700		9503-		1	WX	B KLMNOP	M12X70
38	**PIN: GEAR CASE COVER**							
	908151-0200		9503-		2	ABCDEFGHIJKLMNOPQRSTU	ZA CDEFGHIJ QRS	OD=10 L=20
40	**NUT: GEAR CASE**							
(A)	909110-5080		9503-		1		KL O	M8
(B)	909110-4080		9503-		1		KL OP	M8
41	**WASHER: LK,GEAR CASE**							
(A)	909150-5080		9503-		1		KL O	ID=8
(B)	909150-5120		9503-		1	VWX	KL NOP	ID=12
(B)	909150-5080		9503-		1		KL OP	ID=8
49	**GASKET: GEAR CASE TO COVER**							
(B)	894328-8350		9412-9412		1		B MN	
54	**COVER: GEAR CASE**							
(A)	897020-5660		9412-9412		1		B MN	
(A)	897089-8661	C	9501-9706		1		B MN	
(A)	897180-6870		9707-		1		B MN	
(B)	894155-3602		9503-		1	ABCDEFGHIJKLMNOPQRSTU	ZA CDEFGHIJ QRS	
56	**GASKET: GEAR CASE TO COVER** —ALSO INCLUDED IN GASKET SET(ENGINE)							
	894140-1171		9503-		1	ABCDEFGHIJKLMNOPQRSTU WX	ZA CDEFGHIJ QRS	
57	**COVER: TIMING CHECK HOLE**							
	511321-0090		9503-		2	ABCDEFGHIJKLMNOPQRSTUVWX	ZA CDEFGHIJKL OPQRS	
	511321-1560		9412-9412		2		B MN	
	511321-0090		9501-		2		B MN	
58	**BOLT: CHECK HOLE COVER**							
	050040-6140	A	9503-9804		4	ABCDEFGHIJKLMNOPQRSTUVWX	ZA CDEFG IJKL OPQRS	M6X14 W/LK WASHER
	028080-6120		9805-		4	ABCDEFGHIJKLMNOPQRSTUVWX	ZA CDEFGHIJKL OPQRS	M6X14
	050040-8180		9412-9412		2		B MN	M8X18 W/LK WASHER
	050040-6160	A	9501-9804		2		B MN	M6X16 W/LK WASHER
	028080-6120		9805-		2		B MN	M6X16
60	**BOLT: COVER TO CASE**							
(A)	894205-9871	A	9503-9804		6		B MN	M8X75
(A)	028080-8700		9805-		6		B MN	M8X75
(B)	050040-8320	A	9503-9804		8	ABCDEFGHIJKLMNOPQRSTU	ZA CDEFG IJ QRS	M8X32 W/LK WASHER
(B)	028080-8300		9805-		8	ABCDEFGHIJKLMNOPQRSTU	ZA CDEFGHIJ QRS	M8X32
(B)	894205-9861	A	9503-9804		6	ABCDEFGHIJKLMNOPQRSTU	ZABCDEFG IJ QRS	M8X65
(B)	028080-8600		9805-		6	ABCDEFGHIJKLMNOPQRSTU	ZABCDEFGHIJ QRS	M8X65
(B)	028080-8600		9805-		1	ABCDEFGHIJKLMNOPQRSTU	ZA C HIJ QRS	M8X60

0-20 A TIMING GEAR CASE AND FLYWHEEL HOUSING

FIG-NO.

4JB1 model codes (columns A–X, Z, A–X): PA01 PA02 PA03 PA04 PA05 PA06 PA08 PA09 PA12 PA13 PA13 PA14 PA15 PA16 (PA13UG) PA17 PA18 PA19 PA20 PA21 PB22 PB20 PB23 PD01 PD PF PH PK PK01 PK02 PK03 PK04 PKL PN PL01 PL PLU PL0G PL01UG PL02 PL02UF PN PN01 PN01UG

KEY. NO	PART NUMBER	ITC	APPLIED DATE	LR	QTY	ABCDEFGHIJKLMNOPQRSTUVWXYZABCDEFGHIJKLMNOPQRSTUVWX	Remarks
60	BOLT; COVER TO CASE						
(B)	050040-8600	A	9503-9804		1	ABCDE FGHIJ KLMNO PQRST U · ZA G · IJ · QRS	M8X60 W/LK WASHER
(B)	050040-8450	A	9503-9804		7	B DEFG · MN	M8X45 W/LK WASHER
(B)	028080-8400		9805-		7	B DEFGH · MN	M8X45
62	BOLT; COVER						
	995821-2550		9503-		1	ABCDE FGHIJ KLMNO PQRST · ZA CD EFGHI J · QRS	M12X55 W/HEX-SOCKET
65	GASKET; COVER, TIMING CHECK HOLE					--ALSO INCLUDED IN GASKET SET(ENGINE)	
	111282-0130	A	9409-9409		2	ABCDE FGHIJ KLMNO PQRST VWX Z CD EFG I JKL OPQRS	
	897118-6980		9410-		2	ABCDE FGHIJ KLMNO PQRST UVWX Z BCD EFGHI JKLMN OPQRS	
	897045-3621	A	9412-9412		2	A	
	897118-6980		9501-		2	A	
	894370-8370	C	9410-9410		2	B · MN	
68	COVER ASM; GEAR CASE COVER						
	894155-7211		9503-		1	ABCDE GHIJ KLMNO PQRST U · ZA CD EFG I J · QRS	
	894155-7223		9503-		1	ABCDE GHIJ KLMNO PQRST U · ZA CD EFG I J · QRS	
73	BOLT; COVER FIX						
	050140-6180		9503-		4	ABCDE GHIJ KLMNO PQRST U · ZA CD EFG I J · QRS	M6X18 W/WASHER
80	NUT; COVER						
	909110-4080		9503-		4	KL OP	M8
	909110-4100		9503-		2	B · MN	M10
	909110-4080	C	9412-9412		2	B · MN	M8
	909110-5060		9501-		2	B · MN	M6
81	STUD; GEAR CASE COVER FIX						
	509300-0620		9503-		1	WX · KL OP	
82	WASHER; LK, COVER						
(A)	909150-5120		9503-		1	VWX B · K MN OP	ID=12
(B)	909150-5080	C	9412-9412		2	B · MN	ID=8
(B)	909150-5060		9501-		2	B · MN	ID=6
84	BOLT; SPACER						
	050040-8600	A	9503-9804		5	V	M8X60 W/LK WASHER
	028080-8600		9805-		5	V	M8X60
103	SEAL; OIL, CR/SHF, FRT					--ALSO INCLUDED IN GASKET SET(ENGINE)	
	509625-0790		9503-		1	ABCDE FGHIJ KLMNO PQRST UV ZABCD EFGHI JKLMN OPQRS	
	894311-1650		9503-		1	WX	
109	POINTER; TIMING						
	511327-0180		9503-		1	VWX	
	511327-0180		9412-9412		1	B · MN	
137	BOLT; FRT PLATE						
	050040-8350		9503-		1	V	M8X35 W/LK WASHER
	050040-8220		9503-		6	V · KL	M8X22 W/LK WASHER
140	STUD; COVER						
	904100-8160	C	9412-9412		2	B · MN	

TIMING GEAR CASE AND FLYWHEEL HOUSING

0-20 A
FIG-NO.

KEY NO	PART NAME / PART NUMBER	ITC	APPLIED DATE	LR	QTY	4JB1 (PPPPPPPPPPPPPPPPPPPPPPPPPPPPPPPPPPPPPPPPPPPP / AAAAAAAAAAAAAAAAAAAAABBB DDFHKKKKKKKLLLLLLNNN / 0000000011111111122 2 00 0 0000LL U0000 00 / 1234568923345678901 2 23 1 1234 0 G1122 11 / U G 1 U U U / G F G) — ABCDEFGHIJKLMNOPQRSTUVWXYZABCDEFGHIJKLMNOPQRSTUVWX	Remarks
140	STUD: COVER						
	904110-6160		9501-		2	B MN	M6X16 L=25
149	PLATE: FRT, C/BL						
	894142-1530		9503-		1	V	
	894170-1085		9503-		1	WX KL OP	
	897123-1201		9501-		1	B MN	
173	STUD: RET						
	894133-9742		9503-		10	F DE G I J	
175	SEAL: OIL, CR/SHF, RR					--ALSO INCLUDED IN GASKET SET(ENGINE)	
	894235-3690		9503-		1	AB DEFGHIJKLMNOPQRSTUVWX ZA C IJKLMNOPQRS	
	894235-3690	C	9503-9610		1	C	
	897071-5611		9611-		1	C	
	894385-5620		9503-		1	B	
	897020-3280		9503-		1	DEFGH	
180	GASKET: PLUG						
	909571-4160		9503-		1	B	
204	WASHER: LK, HSG						
	909150-5100		9503-		2	C	ID=10.2
205	NUT: HSG						
	909110-5100		9503-		2	C	M10
211	BOLT: HSG						
(A)	509000-2270		9503-		3	ABCDE HIJ MNOPQRSTU ZAB F H KL Q	M12X25
(B)	050041-2300		9503-		2	ABCDE HIJ MNOPQRSTU ZAB F H KL Q	M12X30 W/LK WASHER
(B)	050041-0300		9503-		3	ABCDE HIJ MNOPQRSTU B F KL Q	M10X30 W/LK WASHER
(B)	050041-0300		9503-		1	C F H	M10X30 W/LK WASHER
220	PLUG: GEAR CHECK HOLE						
	999202-3120		9503-		1	A DE I M P RSTU C Q	
	999202-3160		9503-		1	B H	M16X12
226	STUD: HSG						
	909830-0770		9503-		2	C	
242	GASKET: PLUG						
	909571-4120		9503-		1	A DE I M P RSTU C Q	T=1.0
	909571-4160		9711-		1	H	T=1.0
257	GASKET: TIMING CHECK HOLE						
	897118-6980		9411-		2	ABCDEFGHIJKLMNOPQRSTUVWX ZABCDEFGHIJKLMNOPQRS	
289	WASHER: LK, PLATE, RR						
	909150-8120		9503-		2	VWX	ID=12
	909150-8100		9503-		3	VWX	ID=10
	909150-5100		9503-		1	ABCDEFGHIJKLMNOPQRSTUVWX ZABC I KL OPQ	ID=10.2
	909150-8100		9503-		3	VWX	ID=10
290	PLUG: SENSOR HOLE						
	109605-0800		9711-		1	H	

0-20 A TIMING GEAR CASE AND FLYWHEEL HOUSING

FIG-NO.

4JB1 model columns:

A	B	C	D	E	F	G	H	I	J	K	L	M	N	O	P	Q	R	S	T	U	V	W	X	Y
PA	PA01	PA02	PA03	PA04	PA05	PA06	PA08	PA09	PA12	PA13	PA13UG	PA14	PA15	PA16	PA17	PA18	PA19	PA20	PA21	PA22	PB	PB02	PB03	

Z	A	B	C	D	E	F	G	H	I	J	K	L	M	N	O	P	Q	R	S	T	U	V	W	X
PD	PD01	PF	PH	PK	PK01	PK02	PK03	PK04	PKL	PKL01	PL	PLUG	PL01	PL01UG	PL02	PL02UF	PN	PN01	PN01UG					

KEY NO	PART NAME / PART NUMBER	ITC	APPLIED DATE	LR	QTY	4JB1	Remarks
310	SHAFT: IDLE GEAR						
	894136-2880		9503-		1	V	
	894170-1130		9503-		1	W X / K L / O P	
	894328-4431		9503-		1	B / M N	
324	NIPPLE: OIL PIPE						
	509650-0211		9503-		1	I	
339	COVER: GEAR CASE						
	511321-0360		9503-		1	B / M N	
345	WASHER: LK, COVER						
	909150-5100		9503-		2	B / M N	ID=10.2
349	SPACER: GEAR CASE COVER						
	894129-3110		9503-		1	V	
	894170-1110		9503-		1	W X	
	897010-8690		9503-		1	K L / O P	
351	STUD: COVER, HYDRAULIC PUMP						
(A)	904110-8220		9503-		4	V	M8X22 L=33
(A)	904110-8220		9503-		3	W X / K L / O P	M8X22 L=33
(A)	904110-8400		9503-		1	W X / K L / O P	M8X40 L=52
(A)	904100-8200		9503-		2	B / M N	
(B)	904110-8250		9503-		2	V	M8X25 L=37
(B)	904100-8200		9503-		2	B / K L M	
352	COVER: HYDRAULIC PUMP						
	511321-0350		9503-		1	K L / O P	
356	GASKET: COVER						
	894370-8400		9503-		1	K L / O P	
358	BOLT: ADAPTER						
	050040-8350		9503-		1	B / M N	M8X35 W/LK WASHER
359	WASHER: LK, ADAPTER						
	909150-5080		9503-		4	K L / O P	ID=8
360	GEAR: IDLER, PTO						
	894129-3130		9503-		1	V	
	894328-4420		9503-		1	B / M N	
	512525-0130		9503-		1	W X / K L / O P	
361	BEARING: IDLE GEAR						
	509810-0131		9503-		2	V W X / K L / O P	
	509810-0131	C	9412-9412		1	B / M N	
	897109-1710		9501-		1	B / M N	
	894328-4990	C	9412-9412		1	B / M N	
	897063-3660		9501-		1	B / M N	NSK
362	SHAFT: DRIVE GEAR						
	894129-3160		9503-		1	V	

TIMING GEAR CASE AND FLYWHEEL HOUSING

0-20 A
FIG-NO.

KEY. NO — PART NAME

4JB1

KEY NO	PART NUMBER	ITC	APPLIED DATE	LR	QTY	PPPPP AAAAA 0000 1234 ABCDE	PPPPP AAAAA 00001 56892 FGHIJ	PPPPP AAAAA 11111 33456 U G KLMNO	PPPPP AAAAA 11122 78901 PQRST	PPPP ABBB 2 00 2 23 UVWXY	PPPPP DDFHK 0 1 ZABCD	PPPPP KKKKK 0000L 1234 EFGHI	PPPPP KLLLL L U00 0 G11 1 U U G F JKLMN	PPPPP LLNNN 00 00 22 11 U U G OPQRS	TUVWX	Remarks
362	SHAFT: DRIVE GEAR															
	894170-1140		9503-		1					WX						
	897020-5710		9503-		1						B		MN			
	897010-5230		9503-		1								KL	OP		
364	GEAR: PTO															
	894129-3150		9503-		1					V						
	894401-7980		9503-		1					WX			KL	OP		
	894328-4450		9503-		1						B		MN			
365	BEARING: GEAR															
	900090-6280		9503-		2					V						NSK
	900090-6570		9503-		2					WX						
	894328-5020	C	9412-9412		1						B		MN			
	894173-8630		9503-		1						B		MN			NSK
	897014-4190		9503-		2								KL	OP		
	897109-1780		9501-		1						B		MN			
366	BOLT: GEAR CASE															
(A)	050040-8700		9503-		4					W			KL	OP		M8X70 W/LK WASHER
(B)	050040-8200		9503-		6	ABCDE	FGHIJ	KLMNO	PQRST	U	ZA CD	EFGH		QRS		M8X20 W/LK WASHER
(B)	050040-8450		9503-		2	ABCDE	FGHIJ	KLMNO	PQRST	U WX	ZA CD	EFGH	KL	OP		M8X45 W/LK WASHER
(B)	050040-8600		9503-		4					V						M8X60 W/LK WASHER
(B)	050040-8300		9503-		2					V						M8X30 W/LK WASHER
(B)	050040-8450		9503-		5					V						M8X45 W/LK WASHER
(B)	050040-8200		9503-		7					WX	B	I	JKLMN			M8X20 W/LK WASHER
(B)	050040-8400		9503-		4					WX			KL	OP		M8X40 W/LK WASHER
(B)	050040-8450		9503-		2					WX						M8X45 W/LK WASHER
(B)	050040-8700		9503-		7					WX						M8X70 W/LK WASHER
(B)	050040-8450		9503-		3							I	J			M8X45 W/LK WASHER
(B)	050040-8300		9503-		1							I	J			M8X30 W/LK WASHER
(B)	894205-9861		9503-		2								KLMN	OP		M8X65
(B)	050040-8700		9503-		4								KL	OP		M8X70 W/LK WASHER
(B)	050040-8450		9503-		1									QRS		M8X45 W/LK WASHER
380	GASKET: COVER															
	511322-0180		9503-		1						B		MN			
434	GASKET: SPACER (—ALSO INCLUDED IN GASKET SET(ENGINE))															
	894129-3120		9503-		1					V						
	894170-1120		9503-		1					WX			KL	OP		
	894328-8340		9503-		1						B		MN			
450	GASKET: TACHO SENSOR TO BRKT															
	109630-0850		9503-		1					VWX						ID=14.2 OD=19.2
456	ADAPTER: PTO															
	897020-6761	C	9412-9412		1						B		MN			
	897107-9561	A	9501-9610		1						B		MN			
	897141-2850	C	9611-9706		1						B		MN			
	897180-6860		9707-		1						B		MN			
496	RING: SNAP															
	909180-0300		9503-		1						B		MN			ID=27.9

0-20 A TIMING GEAR CASE AND FLYWHEEL HOUSING

FIG-NO.

KEY. NO	PART NAME / PART NUMBER	ITC	APPLIED DATE	LR	QTY	4JB1										Remarks
						P P P P P	P P P P P	P P P P P	P P P P P	P P P P	P P P P P	P P P P P	P P P P P	P P P P P		
						A A A A A	A A A A A	A A A A A	A A A A A	A B B B	D D F H K	K K K K K	K L L L L	L L N N N		
						0 0 0 0	0 0 0 0 1	1 1 1 1 1	1 1 1 2 2	2 0 0	0	0 0 0 0 L	L U 0 0	0 0 0 0		
						1 2 3 4	5 6 8 9 2	3 3 4 5 6	7 8 9 0 1	2 2 3	1	1 2 3 4	0 G 1 1	2 2 1 1		
								U					I U	U U		
								G					G	F G		
						A B C D E	F G H I J	K L M N O	P Q R S T	U V W X Y	Z A B C D	E F G H I	J K L M N	O P Q R S	T U V W X	
530	DOWEL: TIMING CASE															
	911229-0581		9503-		1					V W X			K L	O P		
539	PLATE: UNDER,FRT PLATE															
	894142-1620		9503-		1					V						
	894328-4400	C	9410-9410		1						B		M N			
	897123-7850		9411-		1						B		M N			
540	BOLT: UNDER PLATE															
	905820-8450		9503-		2					V	B		M N			
541	GASKET: FRT PLATE TO GEAR CASE									--ALSO INCLUDED IN GASKET SET(ENGINE)						
(A)	894129-3100		9503-		1					V						
(B)	894434-7290		9503-		1					W X			K L	O P		
543	STUD: SPACER															
	894321-0320		9503-		1								K L	O P		M8X28 L=78
544	NUT: SPACER															
	909110-4080		9503-		2					V	B		M N			M8
	909110-4080		9503-		1					W X			K L	O P		M8
545	WASHER: LK															
	909150-5080		9503-		2					V			M N			ID=8
	909150-5080		9503-		1					W X	B		K L	O P		ID=8
546	STUD: CASE,PTO PUMP															
	994411-2400		9503-		2					V						
	904411-0250		9503-		2						B		M N			M10X25 L=40

TIMING GEAR CASE AND FLYWHEEL HOUSING

0-20 B
FIG-NO.

KEY NO | PART NAME

KEY NO	PART NUMBER	ITC	APPLIED DATE	LR	QTY	4JB1 (PPPPPPPPPPPPPPPP PPTTTT / YYYYYVVVWWWWWWWW TTPPPP / 0000 00 0000000 00BKKX / 1234 12 2346789 0 0 / 1 1) ABCDEFGHIJKLMNOPQRSTUVWXY	A-4JB1 (PPPPPPPPPPPPPPPPPPPPP / AAAAAAAAAAAAAAAAAYYYY / AAAAAAAAAAAAAAAAWAAAA / 000000000111110 000 / 123456789012345 1 123) ZABCDEFGHIJKLMNOPQRSTUVWX	Remarks
1	CASE: TIMING GEAR							
(B)	894311-8350		9503-		1	N RST		
(D)	894428-7992	A	9503-9609		1	AB DEFG IJKLM OP W	ZABCDE Q	
(D)	894428-7993		9610-		1	AB DEFGHIJKLM OP W	ZABCDEFGHIJ LMNOPQ ST	
(E)	897020-5651		9412-9412		1	C		
(E)	897123-1201		9501-		1	C	K R	
(G)	897129-9821		9705-		1	UV		
2	HOUSING: FLYWHEEL							
(A)	894320-4413		9503-		1	AB	T	
(A)	894318-4074		9503-		1	CDE	Z GHIJ QRS	
(A)	897176-2140		9503-		1		B D L	
(A)	894422-8787		9503-		1		C E	
(B)	897069-8070		9503-		1	F IJK M W		
(B)	894441-9473		9805-		1		O	
(B)	897078-9240		9503-		1	GH N P V	P	
(E)	894341-5310		9503-		1	L O U		
11	PLATE: RR, C/B							
(B)	897028-9060		9503-		1	T		
(C)	894418-1553		9503-		1	RS		
(C)	894418-1553	C	9503-9605		1		A	
(C)	897160-6290		9606-		1		A F MN	
(C)	894437-9232		9712-		1		K	
15	BOLT: RR PLATE TO C/BL							
(A)	509000-2270		9503-		3	RS	A MN	M12X25
(A)	894175-2760		9503-		3	T		
(A)	050041-2300		9503-		2	RS	A MN	M12X30 W/LK WASHER
(A)	902361-2360		9503-		2	T		
(B)	050041-0250		9503-		3	RS	A F MN	M10X25 W/LK WASHER
(B)	902061-0300		9503-		3	T		M10X30 W/LK WASHER
32	GASKET: GEAR CASE TO C/BL					—ALSO INCLUDED IN GASKET SET(ENGINE)		
(A)	894475-0120	C	9502-9502		1	AB DE W		
(B)	897117-2420		9503-		1	AB DE UVW		
(A)	897023-3680	C	9502-9502		1	FG IJKLM OP		
(B)	897117-2420		9503-		1	FG IJKLM OP		
(B)	894129-3361	C	9502-9502		1	C N RST		
(B)	897117-2420		9503-		1	C N RST		
(B)	897117-2420		9503-		1		ZABCDEFG QRS	
36	BOLT: GEAR CASE							
	010806-2700		9503-		1	N RST		M12X70
	010806-2700	A	9503-9804		1	C	R	M12X70
	028081-2700		9805-		1	C	R	M12X70
	050040-8200		9705-		6	UV	HIJ LMNOP T	
	050040-8450		9705-		2	UV	HIJ LMNOP T	
38	PIN: GEAR CASE COVER							
	908151-0200		9503-		2	AB DEFG IJKLM OP UVW	ZABCDEFGHIJ LMNOPQ ST	OD=10 L=20
40	NUT: GEAR CASE							
(B)	909110-4080		9503-		1	N		M8

0-20 B TIMING GEAR CASE AND FLYWHEEL HOUSING

FIG-NO.

KEY NO	PART NAME / PART NUMBER	ITC	APPLIED DATE	LR	QTY	4JB1 (ABCDEFGHIJKLMNOPQRSTUVWXY)	A-4JB1 (ZABCDEFGHIJKLMNOPQRSTUVWX)	Remarks
40	NUT: GEAR CASE							
(B)	909110-4100		9806-		2	N	K	M8
41	WASHER: LK. GEAR CASE							
(C)	909150-5100		9503-		2	N	K R	ID=10.2
(B)	909150-5120		9503-		1	N		ID=12
(B)	909150-5080		9503-		1	N		ID=8
49	GASKET: GEAR CASE TO COVER							
(A)	894140 1171		9503-		1	AB DEFGHIJKLM OP UVW	ZABCDEFGHIJ LMNOPQ ST	
(B)	894328-8350		9412-9412		1	C		
54	COVER: GEAR CASE							
(A)	897020-5660		9412-9412		1	C		
(A)	897180-6870		9707-		1	C	K R	
(A)	897089-8661	C	9501-9706		1	C	R	
(B)	894155-3602		9503-		1	AB DEFGHIJKLM OP UVW	ZABCDEFGHIJ LMNOPQ ST	
57	COVER: TIMING CHECK HOLE							
	511321-0090		9503-		2	AB DEFGHIJKLMNOP RSTUVW	ZABCDEFGHIJKLMNOPQRST	
	511321-1560		9412-9412		2	C		
	511321-0090		9501-		2	C		
58	BOLT: CHECK HOLE COVER							
	050040-6140	A	9503-9804		4	AB DEFG IJKLMNOP RST W	ZABCDEFG Q S	M6X14 W/LK WASHER
	028080-6120		9805-		4	AB DEFGHIJKLMNOP RSTUVW	ZABCDEFGHIJ LMNOPQ ST	M6X14
	028080-6120		9806-		2		K	M6X14
	050040-8180		9412-9412		2	C		M8X18 W/LK WASHER
	050040-6160	A	9503-9804		2	C	R	M6X16 W/LK WASHER
	028080-6120		9805-		2	C	R	M6X16
60	BOLT: COVER TO CASE							
(A)	894205-9871	A	9503-9804		6	C	R	M8X75
(A)	028080-8700		9805-		6	C	K R	M8X75
(A)	894205-9861	A	9503-9804		2	C	R	M8X65
(A)	028080-8600		9805-		2	C	K R	M8X65
(A)	028081-2700		9806-		1		K	M8X65
(A)	050040-8450	A	9503-9804		7	C	R	M8X45 W/LK WASHER
(A)	028080-8400		9805-		7	C	R	M8X45
(B)	028080-8300		9805-		8	AB DEFGHIJKLM OP UVW	ZABCDEFGHIJ LMNOPQ ST	M8X32
(B)	050040-8320	A	9503-9804		8	AB DEFG IJKLM OP W	ZABCDEFG Q S	M8X32 W/LK WASHER
(B)	050040-8600	A	9503-9804		1	AB DEFG IJKLM OP W	ZABCDEFG Q S	M8X60 W/LK WASHER
(B)	028080-8600		9805-		1	AB DEFGHIJKLM OP UVW	ZABCDEFGHIJ LMNOPQ ST	M8X60
(B)	894205-9861	A	9503-9804		6	AB DEFG IJKLM OP W	ZABCDEFG Q S	M8X65
(B)	028080-8600		9805-		6	AB DEFGHIJKLM OP UVW	ZABCDEFGHIJ LMNOPQ ST	M8X65
62	BOLT: COVER							
	995821-2550		9503-		1	AB DEFGHIJKLM OP UVW	ZABCDEFGHIJ LMNOPQ ST	M12X55 W/HEX-SOCKET
	028680-6160		9805-		4		LM	
65	GASKET: COVER, TIMING CHECK HOLE —ALSO INCLUDED IN GASKET SET(ENGINE)							
	111282-0130	C	9410-9410		2	AB D N RST W		
	897118-6980		9411-		2	AB D H N RSTUVW	HIJKLMNOP T	

TIMING GEAR CASE AND FLYWHEEL HOUSING

0–20 B FIG-NO.

KEY. NO — PART NAME

Column codes:

Group	Column	Code
4JB1	A	PY
4JB1	B	PY01
4JB1	C	PY02
4JB1	D	PY03
4JB1	E	PY04
4JB1	F	PV
4JB1	G	PV01
4JB1	H	PV02
4JB1	I	PW
4JB1	J	PW02
4JB1	K	PW03
4JB1	L	PW04
4JB1	M	PW06
4JB1	N	PW07
4JB1	O	PW08
4JB1	P	PW09
4JB1	Q	
4JB1	R	PTQ
4JB1	S	PTQ01
4JB1	T	TPB
4JB1	U	TPK
4JB1	V	TPK01
4JB1	W	TPX
4JB1	X	
4JB1	Y	
A-4JB1	Z	PAA
A-4JB1	A	PAA01
A-4JB1	B	PAA02
A-4JB1	C	PAA03
A-4JB1	D	PAA04
A-4JB1	E	PAA05
A-4JB1	F	PAA06
A-4JB1	G	PAA07
A-4JB1	H	PAA08
A-4JB1	I	PAA09
A-4JB1	J	PAA10
A-4JB1	K	PAA11
A-4JB1	L	PAA12
A-4JB1	M	PAA13
A-4JB1	N	PAA14
A-4JB1	O	PAA15
A-4JB1	P	PAW01
A-4JB1	Q	PYA
A-4JB1	R	PYA01
A-4JB1	S	PYA02
A-4JB1	T	PYA03
A-4JB1	U	
A-4JB1	V	
A-4JB1	W	
A-4JB1	X	

KEY NO	PART NAME / PART NUMBER	I T C	APPLIED DATE	L R	QTY	4JB1 (A–Y)	A-4JB1 (Z–X)	Remarks
65	GASKET; COVER, TIMING CHECK HOLE					—ALSO INCLUDED IN GASKET SET(ENGINE)		
	897027-6010	C	9410-9410		2	F G I J K L M O		
	897118-6980		9411-		2	F G I J K L M O U V		
	897118-6980		9411-		2	C P	Z A B C D E F G Q R S	
68	COVER ASM; GEAR CASE COVER							
	894155-7211		9503-		1	A B D E F G H I J K L M O P W	Z A C D L M Q S	
73	BOLT; COVER FIX							
	050040-8160		9503-		1	R S		M8X16 W/LK WASHER
	050140-6180		9503-		4	A B D E F G H I J K L M O P W		M6X18 W/WASHER
	028680-6160		9805-		4		Z A C D Q S	M6X18
80	NUT; COVER							
	909110-4080		9503-		4	N		M8
	909110-4100		9503-		2	C N	R	M10
	909110-4080	C	9412-9412		2	C		M8
	909110-5060		9501-		2	C	K R	M6
	904411-0250		9806-		2		K	
81	STUD; GEAR CASE COVER FIX							
	509300-0620		9503-		1	N R S T		
82	WASHER; LK, COVER							
(A)	909160-7080		9806-		1	U V	H I J L M N O P T	
(A)	909150-5120		9503-		1		K R	ID=12
(A)	909150-5120		9503-9804		1	C N R S T		ID=12
(B)	909150-5080	C	9412-9412		2	C		ID=8
(B)	909150-5060		9501-		2	C	K R	ID=6
103	SEAL; OIL, CR/SHF, FRT					—ALSO INCLUDED IN GASKET SET(ENGINE)		
	509625-0790		9503-		1	A B C D E F G H I J K L M O P U V W	Z A B C D E F G H I J K L M N O P Q R S T	
	109625-3190		9503-		1	N		
	894311-1650		9503-		1	R S T		
109	POINTER; TIMING							
	511327-0180		9412-9412		1	C		
115	SENSOR; REVOLUTION, ENG SPD							
	181510-5130		9805-		1	A B	T	
	894311-1990		9503-		1	A B		
137	BOLT; FRT PLATE							
	050040-8200		9503-		7	C N R S T	R	M8X20 W/LK WASHER
140	STUD; COVER							
	904100-8160	C	9412-9412		2	C		
	904110-6160		9501-		2	C	K R	M6X16 L=25
149	PLATE; FRT, C/B							
	894170-1085		9503-		1	N		
	894376-1490		9503-		1	R S		
175	SEAL; OIL, CR/SHF, RR					—ALSO INCLUDED IN GASKET SET(ENGINE)		
	894235-3690		9503-		1	F G I J K L M N O P R S T W	Z A B C D E F G	

0-20 B TIMING GEAR CASE AND FLYWHEEL HOUSING

FIG-NO.

KEY. NO	PART NAME / PART NUMBER	I/C	APPLIED DATE	L/R	QTY	4JB1 (A B C D E F G H I J K L M N O P Q R S T U V W X Y)	A-4JB1 (Z A B C D E F G H I J K L M N O P Q R S T U V W X)	Remarks
175	SEAL; OIL, CR/SHF, RR						--ALSO INCLUDED IN GASKET SET(ENGINE)	
	894235-3690	C	9503-9610		1	A B C D E	Q R	
	897071-5611		9611-		1	A B C D E H	H I J K L M N O P Q R S T	
	897020-3280		9705-		1	U V		
180	GASKET; PLUG							
	909571-4120		9503-		1		A G H I J	T=1.0
204	WASHER; LK, HSG							
	909150-5100		9503-		2		B D L O	ID=10.2
205	NUT; HSG							
	909110-5100		9503-		2		B D L O	M10
211	BOLT; HSG							
(A)	509000-2270		9503-		3	A B C D E F G H I J K L M N O P U V W	Z B C D E G H I J L O P Q R S T	M12X25
(A)	050041-0300		9503-		1		B D L O	M10X30 W/LK WASHER
(B)	050041-2300		9503-		2	A B C D E F G H I J K L M N O P U V W	Z B C D E G H I J L O P Q R S T	M12X30 W/LK WASHER
(B)	050041-0300		9503-		3	A B C D E F G H I J K L M N O P U V W	Z C E G H I J P Q R S T	M10X30 W/LK WASHER
220	PLUG; GEAR CHECK HOLE							
	999202-3120		9503-		1		G H I J	
226	STUD; HSG							
	894107-7260		9503-		2		B D L O	14X41
242	GASKET; PLUG							
	909571-4160		9503-		1	I J K L M N P V W	P	
268	COVER; FRT							
	894375-5520		9503-		1	R S		
289	WASHER; LK, PLATE, RR							
	909150-8120		9503-		2	T		ID=12
	909150-8100		9503-		3	T		ID=10
	909150-5100		9503-		1	A B C D E F G H I J K L M N O P R S T W	Z A B C D E F G H I J K L M N O P Q R S T	ID=10.2
290	PLUG; SENSOR HOLE							
	109605-0800		9503-		1	F G H I J K M N P V W	P	
310	SHAFT; IDLE GEAR							
	894328-4431		9503-		1	C	K R	
	894170-1130		9503-		1	N R S T		
339	COVER; GEAR CASE							
	511321-0360		9503-		1	C N	K R	
349	SPACER; GEAR CASE COVER							
	897010-8690		9503-		1	N		
	894170-1110		9503-		1	T		
	894155-7222	C	9503-9506		1	A B D E F G I J K L M O P W		
	894155-7223		9507-		1	A B D E F G I J K L M O P W	Z A C D Q S	
351	STUD; COVER, HYDRAULIC PUMP							
(A)	904100-8200		9503-		2	C	K R	

Model codes (4JB1): PYY01, PYY02, PYY03, PYY04, PYV, PVV01, PVV02, PVW, PWW02, PWW03, PWW04, PWW06, PWW07, PWW08, PWW09, PTQ, PTQ, PTB01, TPK, TPK, TPX01
Model codes (A-4JB1): PAA01–PAA09, PAA10–PAA15, PAW1, PYA, PYA01, PYA02, PYA03

TIMING GEAR CASE AND FLYWHEEL HOUSING

0-20 B
FIG-NO.

KEY NO	PART NAME / PART NUMBER	I T C	APPLIED DATE	L R	QTY	4JB1 (PY01–PY04, PV01–PV02, PW02–PW09, PTQ0/PTQ1, PTB, TPK0/TPK1, TPX) ABCDEFGHIJKLMNOPQRSTUVWXY	A-4JB1 (PAA01–PAA09, PAA10–PAA14, PAW15, PYA1, PYA01–PYA03) ZABCDEFGHIJKLMNOPQRSTUVWX	Remarks
351	STUD; COVER. HYDRAULIC PUMP							
(A)	904110-8220		9503-		3	N RST		M8X22 L=33
(A)	904110-8400		9503-		1	N RST		M8X40 L=52
352	COVER; HYDRAULIC PUMP							
	511321-0350		9503-		1	N		
356	GASKET; COVER							
	894370-8400		9503-		1	N		
358	BOLT; ADAPTER							
	050040-8350		9503-		1	C	R	M8X35 W/LK WASHER
359	WASHER; LK. ADAPTER							
	909150-5080		9503-		4	N		ID=8
360	GEAR; IDLER. PTO							
	894328-4420		9503-		1	C	K R	
	512525-0130		9503-		1	N RST		
361	BEARING; IDLE GEAR							
	509810-0131	C	9412-9412		1	C		
	897109-1710		9501-		1	C	K R	
	894328-4990	C	9412-9412		1	C		
	897063-3660		9501-		1	C	K R	NSK
	509810-0131		9503-		2	N RST		
362	SHAFT; DRIVE GEAR							
	897020-5710		9503-		1	C	K R	
	897010-5230		9503-		1	N		
	894170-1140		9503-		1	T		
364	GEAR; PTO							
	894328-4450		9503-		1	C	K R	
	894401-7980		9503-		1	N T		
365	BEARING; GEAR							
	894328-5020	C	9412-9412		1	C		
	894173-8630		9503-		1	C	K R	NSK
	897014-4190		9503-		2	N		
	900090-6570		9503-		2	T		
	897109-1780		9501-		1	C	K R	
366	BOLT; GEAR CASE							
(B)	894205-9861		9503-		2	C N		M8X65
(B)	050040-8400		9503-		4	N RST		M8X40 W/LK WASHER
(B)	050040-8700		9503-		4	N		M8X70 W/LK WASHER
(B)	050040-8700		9503-		7	RST		M8X70 W/LK WASHER
(B)	050040-8200		9806-		7	RST	K	M8X70 W/LK WASHER
(B)	050040-8200		9503-		6	AB DEFGHIJKLM OP W	ZABCDEFG QRS	M8X20 W/LK WASHER
(B)	050040-8450		9503-		2	AB DEFGHIJKLMNOP RST W	ZABCDEFG QRS	M8X45 W/LK WASHER
380	GASKET; COVER							
	511322-0180		9503-		1	C N	K R	

0-20 B TIMING GEAR CASE AND FLYWHEEL HOUSING

FIG-NO.

KEY NO	PART NAME / PART NUMBER	ITC	APPLIED DATE	LR	QTY	4JB1 (ABCDEFGHIJKLMNOPQRSTUVWXY)	A-4JB1 (ZABCDEFGHIJKLMNOPQRSTUVWX)	Remarks
382	PLUG; HSG							
	999202-3160		9503-		1	I J K L M N P V W	P	M16X12
434	GASKET; SPACER					--ALSO INCLUDED IN GASKET SET(ENGINE)		
	894328-8340	C	9503-9709		1	C	R	
	897186-5350		9710-		1	C	K R	
	894170-1120		9503-		1	N T		
446	GASKET; COVER							
	894375-5530		9503-		1	R S		
450	GASKET; TACHO SENSOR TO BRKT							
	909571-4140		9503-		1	I J K L P		ID=14.2 OD=20.0
456	ADAPTER; PTO							
	897020-6761	C	9412-9412		1	C		
	897107-9561	A	9501-9610		1	C	R	
	897141-2850	C	9611-9706		1	C	R	
	897180-6860		9707-		1	C	K R	
496	RING; SNAP							
	909180-0300		9503-		1	C	K R	ID=27.9
530	DOWEL; TIMING CASE							
	911229-0581		9503-		1	N R S T		
539	PLATE; UNDER, FRT PLATE							
	894328-4400	C	9410-9410		1	C		
	897123-7850		9411-		1	C	K R	
540	BOLT; UNDER PLATE							
	905820-8450		9503-		2	C	Z A B C D E K Q R	
541	GASKET; FRT PLATE TO GEAR CASE					--ALSO INCLUDED IN GASKET SET(ENGINE)		
	894434-7290		9503-		1	N R S T		
543	STUD; SPACER							
	894321-0320		9503-		1	N T		M8X28 L=78
544	NUT; SPACER							
	909110-4080		9503-		1	N T	K	M8
	909110-4080		9503-		2	C	R	M8
	909110-4080		9503-		3	R S		M8
545	WASHER; LK							
	909150-5080		9503-		1	C N T	K R	ID=8
	909150-5080		9503-		3	R S		ID=8
546	STUD; CASE, PTO PUMP							
	904411-0250		9503-		2	C N T	R	M10X25 L=40

Model code header (4JB1): PYY01, PYY02, PYY03, PYY04, PVV01, PVV02, PVW, PWW02, PWW03, PWW04, PWW06, PWW07, PWW08, PWW09, P, PTQ0, PTQ01, TPB, TPK0, TPK, TPX1

Model code header (A-4JB1): PAA01–PAA09, PAA10–PAA15, PAW1, PYA, PYA01, PYA02, PYA03

MEMO

0-22	ENGINE MOUNTING
FIG-NO.	

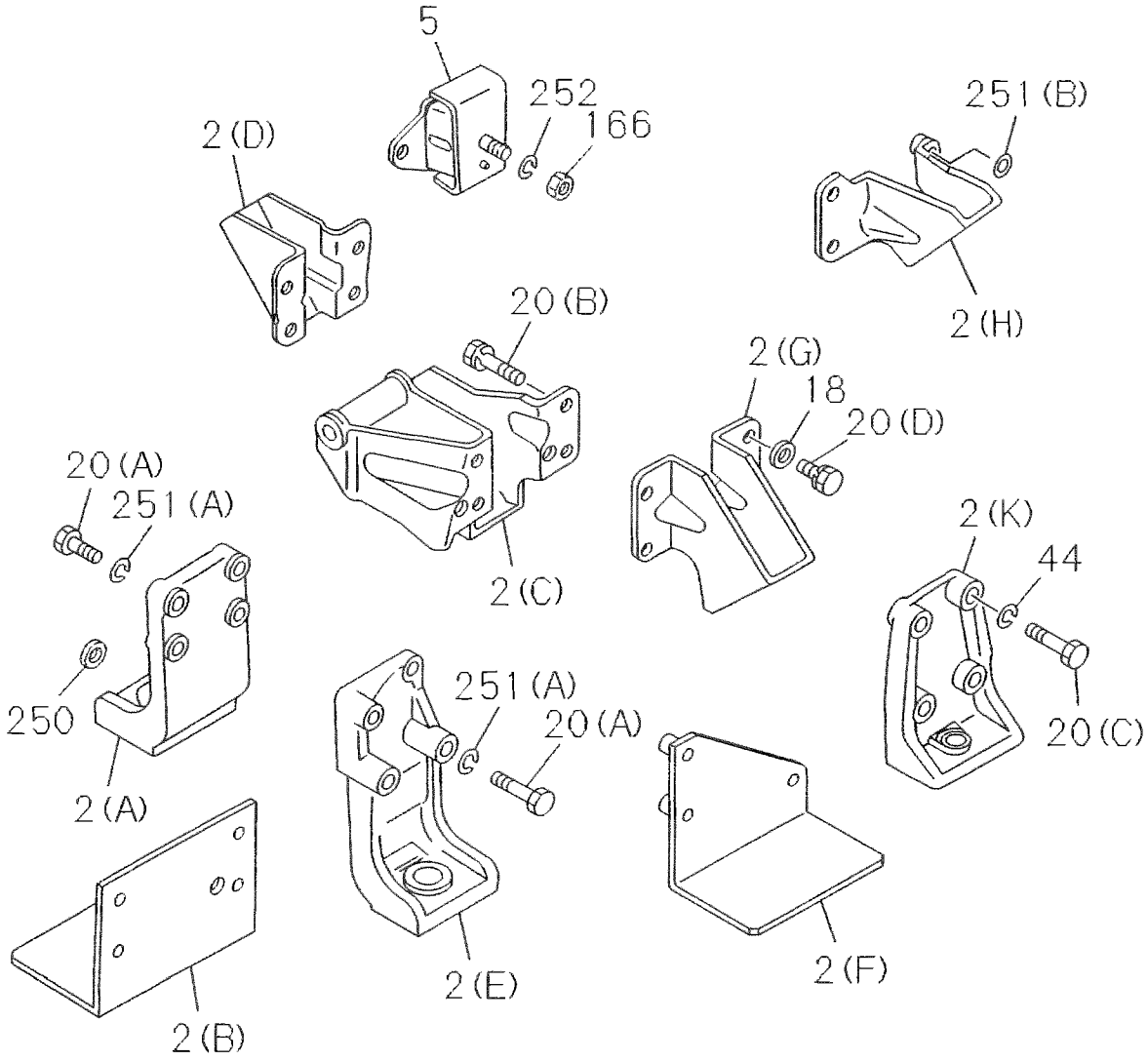

022A0150796

ENGINE MOUNTING

0-22 A

FIG-NO.

KEY. NO	PART NUMBER	ITC	APPLIED DATE	LR	QTY	4JB1 PPPPPPPPPPPPPPPPPPPPPPPP PPPPPPPPPPPPPPPPPPPPPPP AAAAAAAAAAAAAAAAAAAAABBB DDFHKKKKKKLLLLLLNNN 00000001111111111222 00 0 0000LL U0000 00 12345689233456789012 23 1 1234 0 G1122 11 U 1 U U U G G F G ABCDEFGHIJKLMNOPQRSTUVWXYZABCDEFGHIJKLMNOPQRSTUVWX	Remarks
2	FOOT: ENG						
(A)	894435-0861		9503-		1	DE H KLM PQR H	
(A)	894338-7351		9503-		1	I	
(B)	894345-0000		9503-		1	B KLMNOP	
(C)	894428-5382		9503-		1	ABC FG J NO STU F	
(C)	894332-2302		9503-		1	C	
(D)	897048-9201		9503-		1	QRS	
(E)	894435-0871		9503-		1	DE H KLM PQR H	
(E)	894338-7361		9503-		1	I	
(E)	511771-0872		9503-		1	ZA	
(F)	894344-9990		9503-		1	B KLMNOP	
(G)	894122-0521		9503-		1	ABC FG J NO STU F	
(G)	894332-2311		9503-		1	C	
(G)	894453-5471		9503-		1	QRS	
(K)	511773-0120		9503-		2	DE KL P R TU	
5	RUBBER: SUPPORT, ENG FOOT						
	953215-6020		9503-		2	F TU	
20	BOLT: ENG FOOT						
(A)	902061-0350		9503-		2	DE HI KLM PQR ZA H	M10X35
(A)	901066-0400		9503-		2	DE HI KLM PQR ZA	M10X40
(A)	901066-0600		9503-		2	DE HI KLM PQR ZA H	M10X60
(A)	901066-0450		9503-		1	DE HI KLM PQR ZA H	M10X45
(A)	902061-0250		9503-		1	DE HI KLM PQR ZA H	M10X25
(A)	050041-0220		9503-		5	B KLMNOP	M10X22 W/LK WASHER
(A)	050041-0400		9503-		2	B KLMNOP	M10X40 W/LK WASHER
(B)	050041-0220		9503-		6	ABC FG J NO STU C F	M10X22 W/LK WASHER
(B)	050041-0280		9503-		1	ABC F J NO TU C F	M10X28 W/LK WASHER
(B)	050041-4250		9503-		1	ABC FG J NO STU C F	M14X25 W/LK WASHER
(B)	050041-0400		9503-		1	QRS	M10X40 W/LK WASHER
(B)	050041-4250		9503-		1	QRS	M14X25 W/LK WASHER
(B)	050041-0220		9503-		2	QRS	M10X22 W/LK WASHER
(B)	050041-0220		9503-		4	QRS	M10X22 W/LK WASHER
(C)	901666-0400		9503-		8	DE KL P R TU	M10X40
(C)	020801-0250		9503-		8	DE	M10X25
(C)	020801-0250		9503-		4	G	M10X25
44	WASHER: LK, ENG FOOT						
	909150-5100		9503-		8	DE KL P R TU H	ID=10.2
166	NUT: SUPPORT RUBBER						
	999110-4120		9503-		2	F TU	M12
251	WASHER: LK, ENG FOOT						
(A)	909150-5100		9503-		8	DE HI KLM PQR ZA	ID=10.2
(B)	909164-5100		9503-		1	QRS	ID=10
252	WASHER: LK, SUPPORT RUBBER						
	909150-8120		9503-		2	F TU	ID=12

0-22 B ENGINE MOUNTING

FIG-NO.

KEY. NO — PART NAME

KEY NO	PART NUMBER	ITC	APPLIED DATE	LR	QTY	4JB1	A-4JB1	Remarks
						PPPPP PPPPP PPPPP P PPT TTT	PPPPP PPPPP PPPPP PPPPP P	
						YYYYY VVVWW WWWWW W TTP PPP	AAAAA AAAAA AAAAA AAYYY Y	
						0000 00 0000000 QQB KKX	AAAAA AAAAA AAAAA AWAAA A	
						1234 12 2346789 0 0	0000 00000 11111 10 00 0	
						1 1	1234 56789 01234 51 12 3	
						ABCDE FGHIJ KLMNO PQRST UVWXY	ZABCD EFGHI JKLMN OPQRS TUVWX	
2	**FOOT: ENG**							
(A)	511771-0861		9503-		1	FGHI KL OP W		
(A)	894435-0861		9503-		1	V	C G I P	
(C)	894428-5382		9503-		1	AB DE J M RS U	ZAB E H J LM O Q S	
(C)	894332-2302		9503-		1		F N	
(E)	511771-0872		9503-		1	FGHI KL OP W		
(E)	894435-0871		9503-		1	V	C G P	
(G)	894122-0521		9503-		1	AB DE J M U	ZAB DE H J LM O Q S	
	897184-8281		9805-		1		T	
(G)	894332-2311		9503-		1	RS	F N	
(K)	511773-0120		9503-		2		GHI O	
5	**RUBBER: SUPPORT, ENG FOOT**							
	953215-6020		9503-		2		H O	
18	**WASHER: PL, ENG FOOT**							
	909164-5100		9503-		1	RS		ID=10
20	**BOLT: ENG FOOT**							
(A)	901066-0600		9503-		2	F HI KL OP VW	C G I P	M10X60
(A)	902061-0250		9503-		1	F HI KL OP VW	C G I P	M10X25
(A)	901066-0450		9503-		1	F HI KL OP VW	C G I P	M10X45
(A)	901066-0400		9503-		2	F HI L OP	C G I P	M10X40
(A)	901066-0350		9503-		2	F H	I P	M10X35
(A)	902061-0350		9503-		2	I KL OP	C G	M10X35
(A)	902061-0350		9503-		3	K W		M10X35
(A)	902061-0350		9503-		4	V		M10X35
(B)	050041-0280		9503-		1	AB DE J M RS	ZAB DEF H J LMNO Q ST	M10X28 W/LK WASHER
(B)	050041-4250		9503-		1	AB DE J M RS U	ZAB DEF H J LMNO Q ST	M14X25 W/LK WASHER
(B)	050041-0220		9503-		6	AB DE J M	ZAB DEF H J LMNO Q ST	M10X22 W/LK WASHER
(B)	050041-0220		9503-		7	U		M10X22 W/LK WASHER
(B)	050041-0220		9503-		5	RS		M10X22 W/LK WASHER
(B)	020801-0200		9503-		1	RS		M10X20
(C)	901666-0400		9503-		8		GHI O	M10X40
250	**SPACER: ENG FOOT**							
	894416-6930		9503-		1	KL W		OD=32 T=6.0
251	**WASHER: LK, ENG FOOT**							
(A)	909150-5100		9503-		8	FGHI KL OP VW	C G I OP	ID=10.2

MEMO

0-25	INLET MANIFOLD
FIG-NO.	(NO.1)

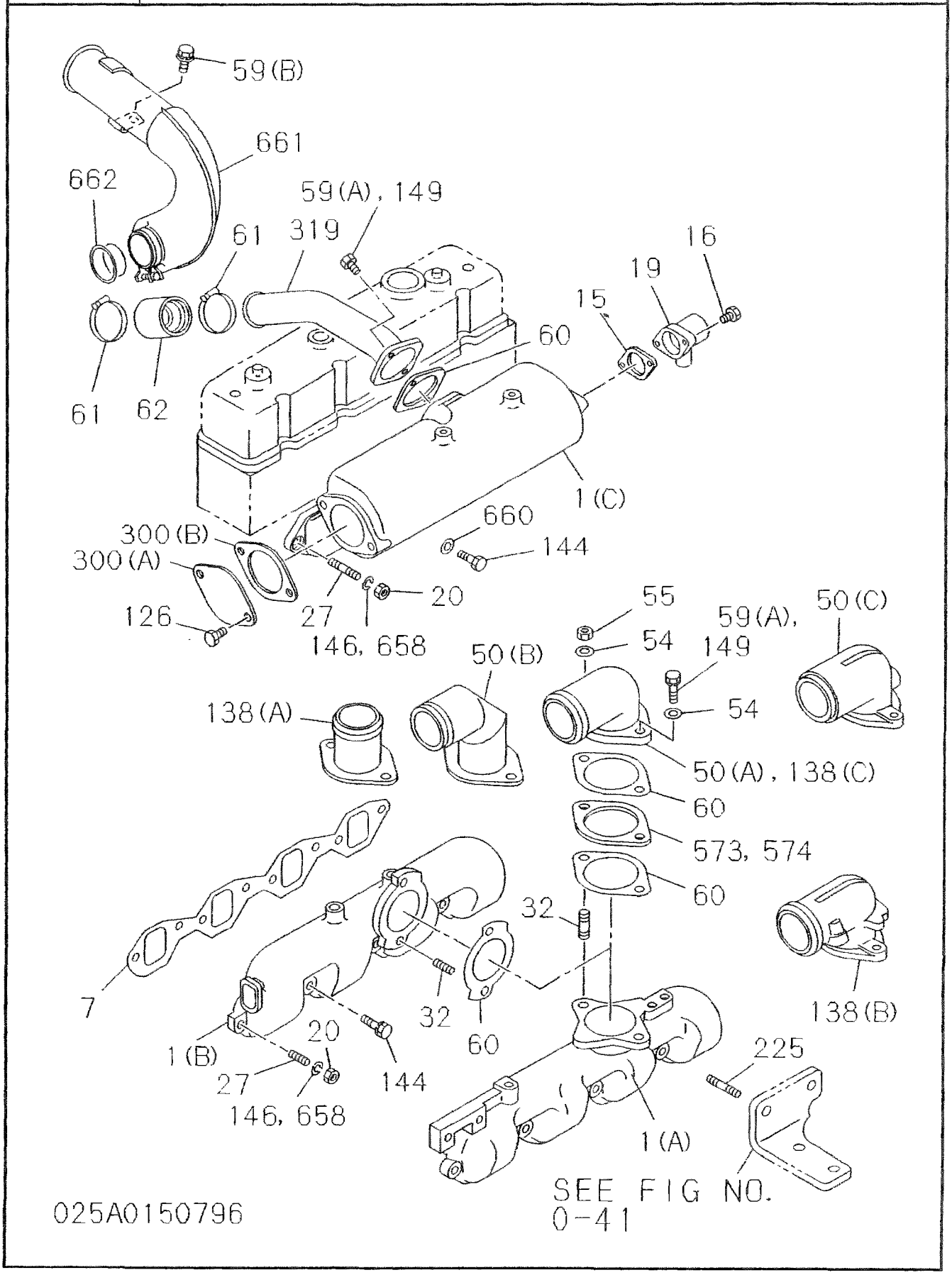

INLET MANIFOLD

(NO.2)

0-25

FIG-NO.

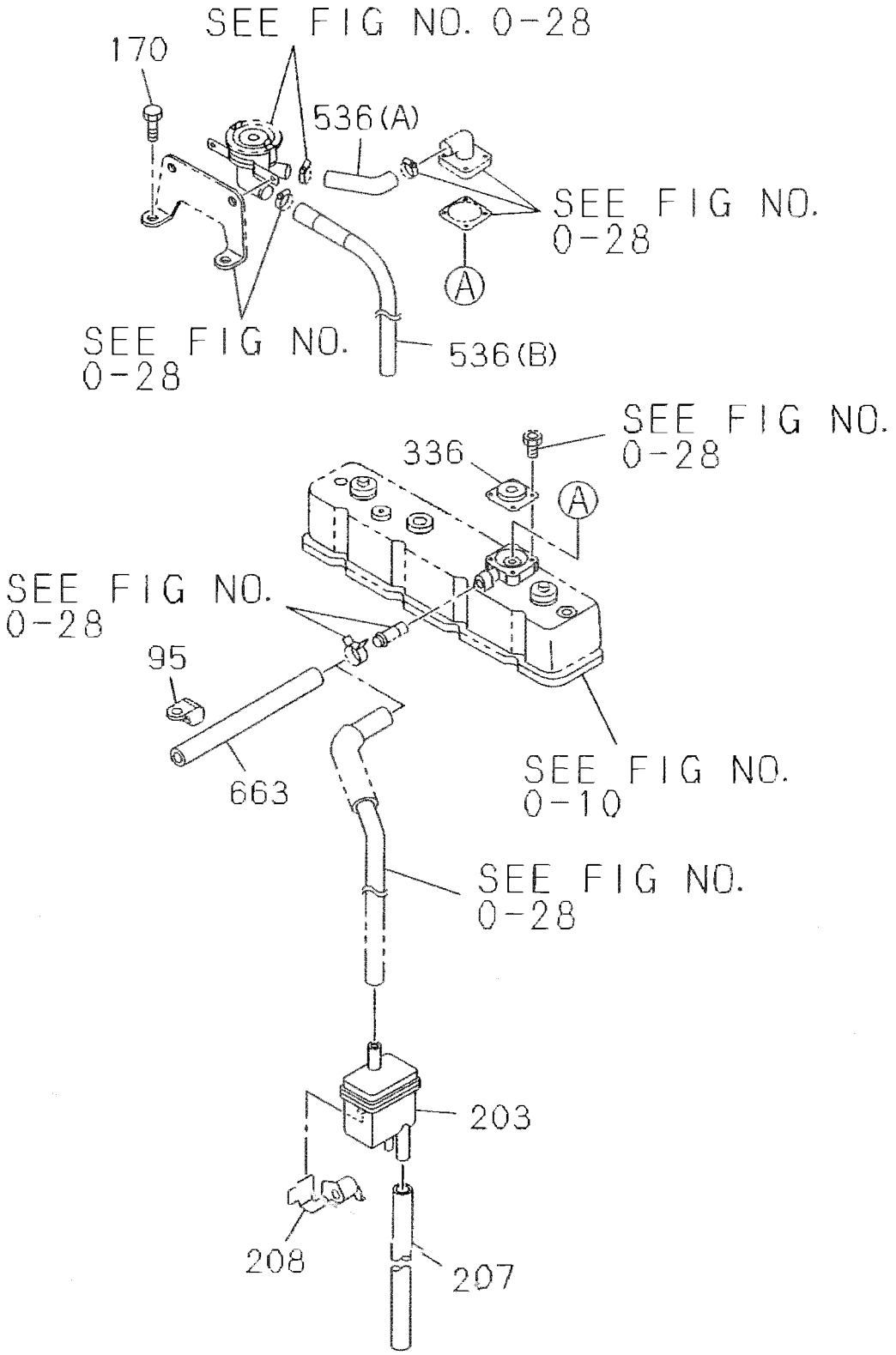

025A0250796

0-25 A INLET MANIFOLD

FIG-NO.

KEY. NO	PART NAME	PART NUMBER	I T C	APPLIED DATE	L R	Q T Y	4JB1 PPPPP AAAAA 0000 1234	PPPPP AAAAA 00001 56892	PPPPP AAAAA 11111 33456 U G	PPPPP AAAAA 11122 78901	PPPP ABBB 2 00 2 23	PPPPP DDFHK 0 1	PPPPP KKKKK 0000L 1234	PPPPP KLLLL L U00 0 G11 1 U G	PPPPP LLNNN 00 22 11 U U F G	Remarks
							ABCDE	FGHIJ	KLMNO	PQRST	UVWXY	ZABCD	EFGHI	JKLMN	OPQRS	TUVWX
1	MANIFOLD; INL															
(A)	894149-3781			9503-		1	ABC	F J	NO			ZABC			OP	
(A)	897011-4881			9503-		1	DE	G I	KLM	PQRST	U		GH	KLMN		
(A)	894435-0891			9503-		1		H								
(A)	897031-6990			9503-		1					VWX					
(B)	894449-7241			9503-9609		1							DEF			
(B)	894449-7241			9503-9609		1								IJ	QRS	
(B)	894109-9014			9610-		1							DEF			
(B)	894109-9014			9610-		1								IJ	QRS	
7	GASKET; INL MANIF TO HD										—ALSO INCLUDED IN GASKET SET(ENGINE)					
	894139-7380		C	9406-9406		1	ABCDE	FGHIJ	KLMNO	PQRST	VWX	ZABC		IJKLMN	OPQRS	
	897066-7411			9407-		1	ABCDE	FGHIJ	KLMNO	PQRST	UVWX	ZABC		IJKLMN	OPQRS	
	897066-7411			9503-		1							DEFGH			
20	NUT; INL MANIF															
	909110-5080			9503-		2	ABCDE	FGHIJ	KLMNO	PQRST	UVWX	ZABC		IJKLMN	OPQRS	M8
	509440-0050			9503-		2							DEFGH			M8 FLANGE
27	STUD; INL MANIF															
	109300-0530			9503-		2						B				M10X18.5 L=33
32	STUD; INL PIPE															
	909630-0200			9503-		2	D				VWX					M10X24 L=41
	894159-0860			9503-		2	E	I	KL							
	894159-0860		C	9401-9401		2				P						
	509300-0530			9402-		2				P						
	109300-0130			9503-		2						B				
50	PIPE; INL															
(A)	894447-5590			9503-		1			KL							
(A)	894340-4031			9503-		1	E					B				
(A)	894340-4031			9503-9705		1							G			
(A)	894152-3171			9503-		1								I		
(B)	894449-7091			9503-		1						ZA				
(C)	897011-0740			9503-		1	ABC	FG J	NO	PQRST	U	C		KLMN	OP	
54	WASHER; LK, INL PIPE															
	909150-5100			9503-		2	DE	I	KL	P						ID=10.2
	909150-8100			9503-		2						B				ID=10
55	NUT; INL PIPE															
	909110-4100			9503-		2	DE	I	KL	P		B				M10
59	BOLT; INL PIPE TO MANIF															
(A)	050041-0250		A	9503-9804		2	ABC	FG J	MNO	QRST	U	ZA C	G I	KLMN		M10X25 W/LK WASHER
(A)	028681-0250			9805-		2	ABC	FG J	MNO	QRST	U	ZA C	G I	KLMN		M10X25
(A)	028081-0600			9805-		2		H								M10X65
(A)	509030-0241		A	9503-9804		2		H								M10X65
(A)	028781-0300			9805-		2							I		QRS	M10X30
(A)	050051-0300		A	9503-9804		2									QRS	M10X30 W/LK WASHER
60	GASKET; INL PIPE										—ALSO INCLUDED IN GASKET SET(ENGINE)					
	509637-0281		C	9410-9410		1	ABCD	FG J	MNO	QRS		Z BC		KLMN		

INLET MANIFOLD

0-25 A
FIG-NO.

KEY. NO — PART NAME

Model 4JB1 — column codes:

```
PPPPP PPPPP PPPPP PPPPP PPPP  PPPPP PPPPP PPPPP PPPPP
AAAAA AAAAA AAAAA AAAAA ABBB  DDFHK KKKKK KLLLL LLNNN
 0000 00001 11111 11122 2 00  0      0000L L U00 00 00
 1234 56892 33456 78901 2 23  1      1234 0 G11 22 11
              U                           1  U  U   U
              G                              G  F   G
ABCDE FGHIJ KLMNO PQRST UVWXY ZABCD EFGHI JKLMN OPQRS TUVWX
```

KEY NO	PART NAME / PART NUMBER	ITC	APPLIED DATE	LR	QTY	MODELS	Remarks
60	GASKET; INL PIPE					--ALSO INCLUDED IN GASKET SET(ENGINE)	
	509637-0281		9411-		2	E	
	897022-5710		9411-		1	ABCD FG J MNO QRST U Z BC KLMN	
	897022-5710		9411-		2	I P OP	
	897022-5710		9411-		3	H KL	
	897022-5710		9411-		1	ABCD FGHIJ KLMNO PQRST U ZABC KLMN OP	
	897022-5710		9411-		1	ABCD FGHIJ KLMNO PQRST U ZABC KLMN OP	
	894328-6740	C	9410-9410		1	VWX I QRS	
	897035-8830		9411-		1	VWX I QRS	
95	CLIP; RUBBER HOSE						
	109700-3460		9503-		1	QRS	ID=23
138	PIPE; INL						
(A)	894325-6510		9503-		1	H	
(B)	894441-5930		9503-		1	D M DEF QRS	
144	BOLT; BRACKET FIX						
	028080-8250		9805-		6	ABCDE FGHIJ KLMNO PQRST UVWX ZABCD EFGHI JKLMN PQRS	M8X25
	050040-8250	A	9503-9804		6	ABCDE FGHIJ KLMNO PQRST UVWX ZABCD EFG I JKLMN PQRS	M8X25 W/LK WASHER
146	WASHER; LK. BRKT						
	909150-5080		9503-		2	ABCDE FGHIJ KLMNO PQRST UVWX ZABC HI JKLMN OPQRS	ID=8
	909164-7080		9503-9704		2	DEFG	ID=8 OD=22
149	BOLT; INT SHUTTER						
	050041-0600	A	9503-9804		2	E I OP	M10X60 W/LK WASHER
	028081-0500		9805-		2	E I OP	M10X60 W/LK WASHER
225	STUD; FUEL FILTER						
	909630-0200		9503-		2	ABCDE FGHIJ KLMNO PQRST UVWX ZABC KLMN OP	M10X24 L=41
336	VALVE ; VENTILATION						
	894250-1720		9503-		1	ABCDE FGHIJ KLMNO PQRST UVWX ZABCD EFGHI JKLMN OPQRS	
574	SPACER; INL PIPE						
	894429-4310		9503-		1	H KL	
658	WASHER; PL. GUIDE						
	909164-7080		9705-		1	DEFGH	ID=8 OD=22
663	HOSE; RUBBER						
	894495-5490		9503-		1	QRS	L=680
	894495-5490		9503-9609		1	DEF	L=680

0-25 B INLET MANIFOLD

FIG-NO.

KEY NO	PART NAME / PART NUMBER	ITC	APPLIED DATE	LR	QTY	4JB1 (ABCDEFGHIJKLMNOPQRSTUVWXY)	A-4JB1 (ZABCDEFGHIJKLMNOPQRSTUVWX)	Remarks
1	MANIFOLD; INL							
(A)	897011-4881		9503-		1	ABCDEFGHI K MNOP UV	ZABCDE HIJKLMNOPQR T	
(A)	894149-3781		9503-		1	J L		
(A)	897017-7740		9503-9703		1	W		
(A)	897011-4881		9704-		1	W	FG S	
(C)	894333-0950		9503-		1	RST		
7	GASKET; INL MANIF TO HD					—ALSO INCLUDED IN GASKET SET(ENGINE)		
	897019-5701	A	9406-9406		1	FG IJKLMNO		
	897066-7411		9407-		1	FGHIJKLMNO UV	HIJKLMNOP T	
	894139-7380	A	9406-9406		1	A D RST W		
	897066-7411		9407-		1	A D RST W		
	894139-7380	C	9411-9411		1	BC		
	897066-7411		9412-		1	BC E P	ZABCDEFG QRS	
15	GASKET; VLV							
	894155-5460		9503-		1	RST W		
16	BOLT; VALVE, BOOST RELIEF							
	050040-6220	A	9503-9804		2	RST		M6X22 W/LK WASHER
	028080-6200		9805-		2	RST		M6X22
	050040-6160		9503-		2	W		M6X16 W/LK WASHER
19	VALVE; RELIEF, TURBOCHARGER BOOST							
	894155-5451		9503-		1	RST W		
20	NUT; INL MANIF							
	909110-5080		9503-		2	ABCDEFG IJKLMNOP RST W	ZABCDEFGHIJKLMNOPQRST	M8
32	STUD; INL PIPE							
	909630-0200	C	9503-9512		2	CDE	QR	M10X24 L=41
	894342-7130		9601-		2	CDE	QRS	M10X28
	909630-0200		9503-9703		2	W		M10X24 L=41
	894342-7130		9704-		2	W		M10X28
50	PIPE; INL							
(C)	897011-0740		9503-		1	JK MN	ZAB DEF H J LMNO	
54	WASHER; LK, INL PIPE							
	909150-5100		9503-		2	W		ID=10.2
55	NUT; INL PIPE							
	909110-4100		9503-		2	W		M10
59	BOLT; INL PIPE TO MANIF							
(A)	050041-0250	A	9503-9804		2	AB JKLMN P RST	ZAB DEFG	M10X25 W/LK WASHER
(A)	028681-0250		9805-		2	AB JKLMN P RSTUV	ZAB DEFG	M10X25
(A)	509030-0241	A	9503-9804		2		C	M10X65
(A)	028081-0600		9805-		2		C	M10X65
(B)	050140-8160	A	9503-9804		1	RS		M8X16 W/WASHER
(B)	028080-8120		9805-		1	RS		M8X16
60	GASKET; INL PIPE					—ALSO INCLUDED IN GASKET SET(ENGINE)		
	509637-0281	C	9410-9410		1	AB D JK W		

INLET MANIFOLD

FIG-NO. **0-25 B**

KEY NO	PART NAME / PART NUMBER	ITC	APPLIED DATE	LR	QTY	4JB1 PPPPP PPPPP PPPPP P PPT TTT YYYYY VVVWW WWWWW W TTP PPP 0000 00 0000000 0 QQB KKX 1234 12 2346789 0 0 1 1 A B C D E F G H I J K L M N O P Q R S T U V W X Y	A-4JB1 PPPPP PPPPP PPPPP PPPPP P AAAAA AAAAA AAAAA AAYYY Y AAAAA AAAAA AAAAA AWAAA A 0000 00000 11111 10 00 0 1234 56789 01234 51 12 3 Z A B C D E F G H I J K L M N O P Q R S T U V W X	Remarks
60	GASKET: INL PIPE					--ALSO INCLUDED IN GASKET SET(ENGINE)		
	897022-5710		9411-		1	C E L M N O P	Z A B D E F G J Q R S	
	509637-0281	C	9410-9410		1	C		
	897022-5710		9411-		1	A B C D E J K L M N O P U V W	Z A B D E F G H I J K L M N O Q R S T	
	894328-6740	C	9410-9410		1	R S		
	897035-8830		9411-		1	R S T		
	897022-5710		9503-		3	H	C	
61	CLIP: CONNECTOR HOSE							
	894175-9400	A	9403-9403		2	R S T W		
	894126-7700		9404-		2	R S T U V W		D=44 TO D=60
62	HOSE: CONNECTOR							
	894343-3621		9503-		1	R S T U V W		
126	BOLT: COVER							
	050051-0250	A	9503-9804		2	R S T		M10X25 W/LK WASHER
	028781-0300		9805-		2	R S T		M10X25
	028081-0500		9805-		2		J	M10X25
	028681-0250		9805-		2	H	H I K L M N O	M10X25
138	PIPE: INL							
(C)	894325-6510		9503-		1		C K	
(C)	894152-3171		9707-		1		I	
(B)	894441-5930		9503-		1	A B P		
(B)	894152-3180		9503-		1	H	G	
144	BOLT: BRACKET FIX							
	050040-8250	A	9503-9804		6	A B C D E F G I J K L M N O P W	Z A B C D E F G Q R S	M8X25 W/LK WASHER
	028080-8250		9805-		6	A B C D E F G H I J K L M N O P U V W	Z A B C D E F G H I J K L M N O P Q R S T	M8X25
	050040-8250	A	9503-9804		5	R S T		M8X25 W/LK WASHER
	028080-8250		9805-		5	R S T		M8X25
	050040-8280	A	9503-9804		1	R S T		M8X28 W/LK WASHER
	028080-8300		9805-		1	R S T		M8X28
146	WASHER: LK, BRKT							
	909150-5080		9503-		2	A B C D E F G I J K L M N O P R S T W	Z A B C D E F G H I J K L M N O P Q R S T	ID=8
170	BOLT: BRKT							
	050040-8160	A	9503-9804		2	R S T		M8X16 W/LK WASHER
	028080-8120		9805-		2	R S T		M8X16
203	TANK: CATCH, PRESSURE CONT VALVE							
	897065-5440		9503-		1	C D E	F N T	
207	HOSE: RUBBER, CATCH TANK TO OIL PAN							
	897071-8092		9503-		1	C	F N	
	897088-8004		9503-		1	D E	T	
208	BRACKET: CATCH TANK, OIL							
	897071-6632		9503-		1	C D E	F N	
	897192-6530		9712-		1		T	
225	STUD: FUEL FILTER							
	909630-0200		9503-		2	A B F G H I J K L M N O P	Z A C D E F G H I J K L M N O P R T	M10X24 L=41

0-25 B INLET MANIFOLD

FIG-NO.

KEY. NO	PART NAME / PART NUMBER	ITC	APPLIED DATE	LR	QTY	4JB1 PPPPP YYYYY 0000 1234	PPPPP VVVWW 00 0 12 2	PPPPP WWWWW 00000 34678	P PPT W TTP 0 GOB 9 0 1	TTT PPP KKX 0 1	A-4JB1 PPPPP AAAAA AAAAA 0000 1234	PPPPP AAAAA AAAAA 00000 56789	PPPPP AAAAA AAAAA 11111 01234	PPPPP AAYYY AWAAA 10 00 51 12	P Y A 0 3	Remarks
						ABCDE	FGHIJ	KLMNO	PQRST	UVWXY	ZABCD	EFGHI	JKLMN	OPQRS	TUVWX	
300	COVER: INL MANIF COVER															
(A)	894343-5120		9503-		1				RST							
(B)	894419-7190		9503-		1				RST							
319	DUCT: INL, TURBOCHARGER OUTLET															
	894363-0891		9503-		1				RST							
	897017-7820		9503-		1					UVW						
336	VALVE : VENTILATION															
	894250-1720		9503-		1	ABCDE	FGHIJ	KLMNO	P	UVW	ZABCD	EFGHI	JKLMN	OPQRS	T	
536	HOSE: RUBBER, BREATHER															
(A)	894334-8682		9503-		1				RST							
(B)	894334-8673		9503-		1				RST							
573	BRACKET: CONNECTOR															
	894429-4310		9503-		1						C					
660	PIECE: DISTANCE															
	914149-1740		9503-		1				RST							
661	PIPE: INL, A/C TO TURBOCHARGER															
	894343-2440		9503-		1				RS							
662	SEAL: RUBBER, INL PIPE															
	894439-2870		9503-		1				RS							

MEMO

0-27	EXHAUST MANIFOLD
FIG-NO.	

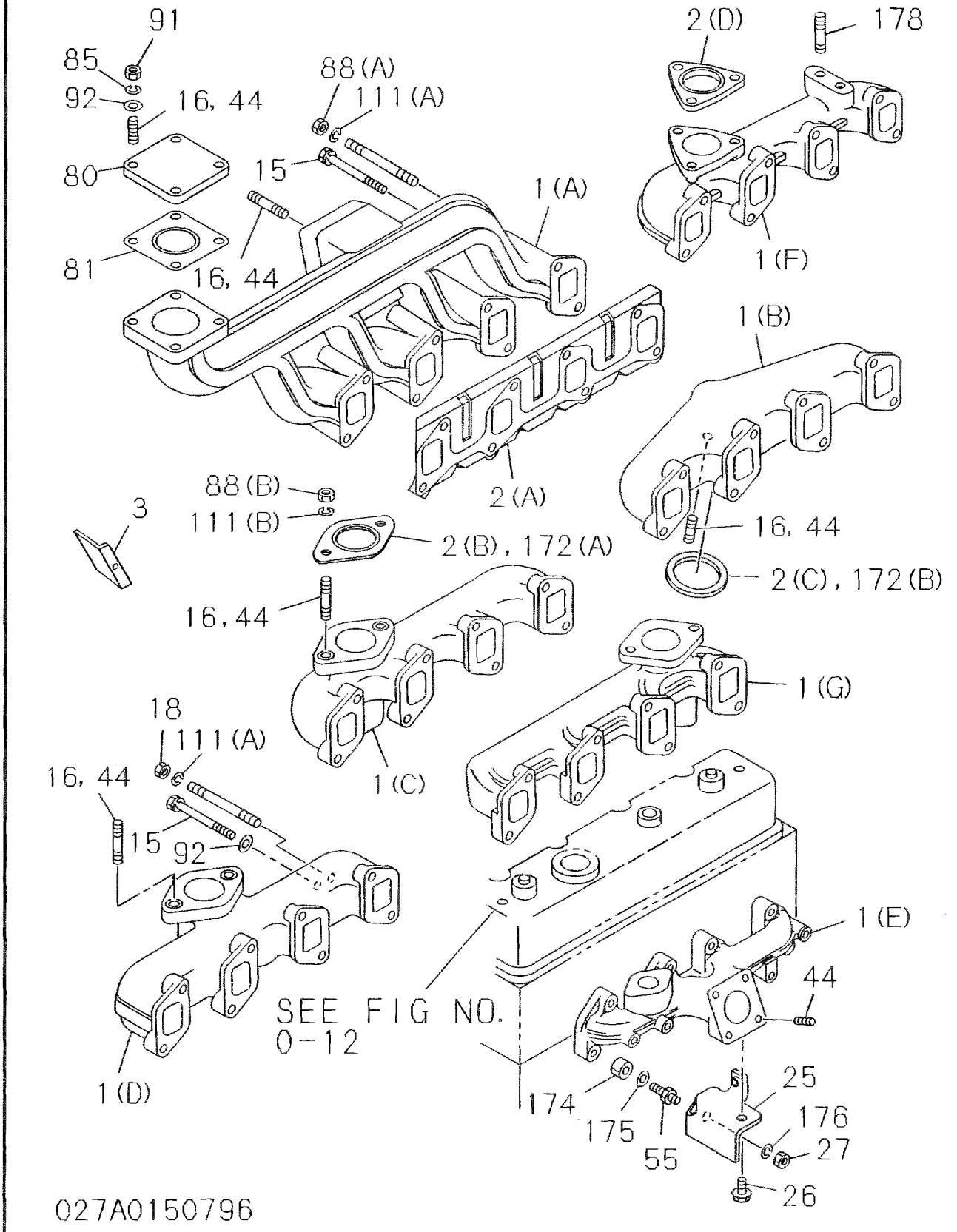

EXHAUST MANIFOLD

FIG-NO. 0-27 A

Applicable models: 4JB1

KEY NO	PART NAME / PART NUMBER	ITC	APPLIED DATE	LR	QTY	ABCDE	FGHIJ	KLMNO	PQRST	UVWXY	ZABCD	EFGHI	JKLMN	OPQRS	TUVWX	Remarks
1	MANIFOLD; EXHAUST															
(A)	894142-1612		9503-		1					V						
(B)	894259-8802	C	9410-9410		1		F		Q R		D	E F G I	J M N	Q R S		
(B)	897065-9601		9411-		1		F		Q R		D	E G I	J M N	Q R S		
(C)	894428-8031		9503-		1	A B D E	H I	K L	P S		Z		K L	O P		
(C)	897021-6900		9503-		1	C		M								
(C)	894428-8031		9503-9508		1		G									
(G)	894147-5330		9509-		1		G									
(C)	894451-9901		9503-		1						C					
(D)	894468-2310		9503-		1					W X						
(F)	894377-2632		9503-		1						B					
(C)	897021-6900		9503-9505		1				T							
(C)	894147-5330		9506-		1				T							
(C)	894428-8031	A	9503-9505		1		J	N O								
(G)	894147-5330		9506-		1		J	N O		U						
(G)	894147-5330		9503-		1						A					
(B)	897065-9601		9411-9508		1							F				
(G)	894147-5330		9509-		1							F H				
2	GASKET; EXH MANIF TO HD —ALSO INCLUDED IN GASKET SET(ENGINE)															
(A)	897020-5910	C	9409-9409		1						A					
(A)	897109-2161		9410-		1						A	H				
(A)	894139-5261	C	9403-9403		1						D	E F G				
(A)	897020-5910	C	9404-9409		1						D	E F G				
(B)	897109-2161		9410-		1						D	E F G				
(B)	894139-5261	C	9409-9409		1	A B C D E	F G H I J	K L M N O	P Q R S T	V W X	Z B C	I	J K L M N	O P Q R S		
(B)	897109-2161		9410-		1	A B C D E	F G H I J	K L M N O	P Q R S T	U V W X	Z B C	I	J K L M N	O P Q R S		
(B)	894428-8010	C	9406-9406		1	A B C D E	F G H J	K L N O	P S		Z C		K L	O P		
(B)	897016-1010		9407-		1	A B C D E	F G H J	K L N O	P S T	U	Z A C		K L	O P		
(B)	894428-8010	C	9406-9406		2		I									
(B)	897016-1010		9407-		2		I									
(B)	894428-8010	C	9406-9406		3			M								
(B)	897016-1010		9407-		3			M								
(C)	897069-2870		9503-		1		F		Q			I				
(D)	894381-1610		9503-		2						B					
3	PROTECTOR; HEAT. EXH MANIF															
	894447-9671		9503-		1					W X						
15	BOLT; EXH MANIF															
	050040-8300		9503-		6	A B C D E	G H I J	K L M N O	P S T	U	Z A B C		K L	O P		M8X30 W/LK WASHER
	050040-8350		9503-		6		F		Q R	W X	D	E F G H I	J M N	Q R S		M8X35 W/LK WASHER
	050040-8800		9503-		4					V						M8X80 W/LK WASHER
16	STUD; EXH PIPE TO MANIF															
	904110-8250		9503-		2	C		M			C					M8X25 L=37
	904411-0220		9503-		4		F		R			F				M10X22 L=37
	904731-0300		9503-		4					V						
	904411-0300		9503-		4					V		I	J			M10X30 L=45
	894449-4630		9503-		2					W X						
	904731-0280		9503-		3						B					
	509302-0081		9503-		4						D	E G				M10X45 L=60 PLATING
	904110-8200		9503-		2							G				M8X20 L=32

0-27 A EXHAUST MANIFOLD

FIG-NO.

KEY. NO / PART NAME

4JB1 models: A=PA, B=PA01, C=PA02, D=PA03, E=PA04, F=PA05, G=PA06, H=PA08, I=PA09, J=PA12, K=PA13, L=PA13UG, M=PA14, N=PA15, O=PA16, P=PA17, Q=PA18, R=PA19, S=PA20, T=PA21, U=PA22, V=PB, W=PB02, X=PB03, Y=—, Z=PD, A=PD01, B=PF, C=PH, D=PK, E=PK01, F=PK02, G=PK03, H=PK04, I=PKL, J=PKL01, K=PL, L=PLUG, M=PL01, N=PL01UG, O=PL02, P=PL02UF, Q=PN, R=PN01, S=PN01UG, T U V W X=—

KEY NO	PART NUMBER	ITC	APPLIED DATE	LR	QTY	ABCDE	FGHIJ	KLMNO	PQRST	UVWXY	ZABCD	EFGHI	JKLMN	OPQRS	TUVWX	Remarks
16	STUD: EXH PIPE TO MANIF															
	904411-0250		9503-		4								M N			M10X25 L=40
	897032-9771		9503-		4									Q R S		M10X45 L=60
18	NUT: EXH MANIF															
	909110-4080		9503-		2	A B C D E	F G H I J	K L M N O	P Q R S T	U W X	Z A B C	I	J K L M N	O P Q R S		M8
	909110-4080	A	9503-9704		2						D	E F G				M8
	909110-5080		9705-		2						D	E F G H				M8
80	COVER: EXH MANIF															
	514149-0810		9503-		1					V						
81	GASKET: COVER					—ALSO INCLUDED IN GASKET SET(ENGINE)										
	514149-0790		9503-		1					V						
85	WASHER: LK. COVER															
	109500-0080		9503-		4					V						
88	NUT: EXH PIPE															
(A)	909110-4080		9503-		4					V						M8
(B)	909110-4080		9503-		2			M								M8
91	NUT: COVER															
	909842-0070		9503-		4					V						M10 P=1.5 H=8
92	WASHER: PL. COVER															
	909164-5100		9503-		4					V						ID=10
111	WASHER: LK															
(A)	909150-5080		9503-		2	A B C D E	F G H I J	K L M N O	P Q R S T	U W X	Z A B C D	E F G H I	J K L M N	O P Q R S		ID=8
(A)	909150-5080		9503-		4					V						ID=8
(B)	909150-5080		9503-		2			M								ID=8
178	STUD: EXH SILENCER															
	904731-0280		9503-		2						B					

EXHAUST MANIFOLD

0-27 B
FIG-NO.

Model code header (4JB1 / A-4JB1), as printed:

4JB1: PPPPPPPPPPPPPPPPP PPTTTT / YYYYYVVVWWWWWWWW TTPPPP / 0000 00 0000000 00BKKX / 1234 12 2345789 0 0 / 1 1
A-4JB1: PPPPPPPPPPPPPPPPPPPPP / AAAAAAAAAAAAAAAAAYYYY / AAAAAAAAAAAAAAAAWAAAA / 000000000111110 000 / 123456789012345 1 123

Column letters: 4JB1 = ABCDEFGHIJKLMNOPQRSTUVWXY; A-4JB1 = ZABCDEFGHIJKLMNOPQRSTUVWX

KEY NO	PART NAME / PART NUMBER	ITC	APPLIED DATE	LR	QTY	4JB1	A-4JB1	Remarks
1	MANIFOLD: EXHAUST							
(A)	894147-5330		9503-		1		ZA CD FG IJ LMNOP	
(B)	894259-8802		9410-9410		1	JK O		
(B)	897065-9601		9411-		1	JK OP	H K	
(C)	897021-6900		9503-		1	ABCDE	B E QRST	
(C)	894428-8031		9503-		1	FGHI LM		
(D)	894468-2310		9503-		1	N		
(E)	897039-4733		9503-		1	RSTUVW		
2	GASKET: EXH MANIF TO HD					--ALSO INCLUDED IN GASKET SET(ENGINE)		
(A)	894139-5261		9503-9503		1	ABCD		
(A)	897016-1000		9503-9503		1	FG IJKLMNO		
(A)	894434-8570	C	9410-9410		1	RST W		
(A)	897109-2161		9411-		1	ABCDEFGHIJKLMNOP RSTUVW	ZABCDEFGHIJKLMNOPQRST	
15	BOLT: EXH MANIF							
	050040-8300		9503-		6	ABCDEFGHI LM	ZABCDEFGHIJ LMNOPQRST	M8X30 W/LK WASHER
	050040-8350		9503-		6	JK MNOP RSTUVW	K	M8X35 W/LK WASHER
16	STUD: EXH PIPE TO MANIF							
	904110-8250		9503-		2	ABCDE	B QRST	M8X25 L=37
	904731-0250		9503-		4	K	H K	M10X25 L=40
18	NUT: EXH MANIF							
	909110-4080		9503-		2	ABCDEFGHIJKLMNOP RSTUVW	ZABCDEFGHIJKLMNOPQRST	M8
25	BRACKET: EXH MANIF							
	894449-9453		9503-		1	RSTUVW		
26	BOLT: BRKT TO EXH MANIF							
	894312-6991		9503-		1	RSTUVW		M8X14 FLANGE
27	NUT: BRKT, EXH MANIF							
	909110-5080		9503-		1	RSTUVW		M8
44	STUD: TURBOCHARGER							
	894257-3190		9503-		4	RSTUVW		M8X22 L=33
55	BOLT: BRKT							
	894450-1730		9503-		1	RSTUVW		M8X14.5 & M8X20
111	WASHER: LK							
(A)	909150-5080		9503-		2	ABCDEFGHIJKLMNOP RSTUVW	ZABCDEFGHIJKLMNOPQRST	ID=8
172	GASKET: EXH PIPE							
(A)	894428-8010	C	9410-9410		1	ABCD		
(A)	897016-1010		9411-		1	ABCD		
(A)	897016-1010		9503-		1	E H L	ABCDEFG IJ LMNO QRST	
	897069-2870		9503-		1	J O W	K	
174	SPACER: BRKT TO BODY							
	894140-4271		9503-		1	RSTUVW		RUBBER BUSH
175	WASHER: PL, SPACER							
	909164-7080		9503-		1	RSTUVW		ID=8 OD=22

0-27 B EXHAUST MANIFOLD

FIG-NO.

KEY. NO	PART NAME / PART NUMBER	ITC	APPLIED DATE	LR	QTY	4JB1	A-4JB1	Remarks
176	WASHER ; PL, SPACER							
	909150-5080		9503-		1	R S T U V W		ID=8

4JB1 model columns:

	A	B	C	D	E	F	G	H	I	J	K	L	M	N	O	P	Q	R	S	T	U	V	W	X	Y
Model	PY	PY01	PY02	PY03	PY04	PV	PV01	PV02	PW	PW02	PW03	PW04	PW06	PW07	PW08	PW09		PT0	PTQ01	TPB	TPK	TPK01	TPX		
176																		R	S	T	U	V	W		

A-4JB1 model columns:

	Z	A	B	C	D	E	F	G	H	I	J	K	L	M	N	O	P	Q	R	S	T	U	V	W	X
Model	PAA	PAA01	PAA02	PAA03	PAA04	PAA05	PAA06	PAA07	PAA08	PAA09	PAA10	PAA11	PAA12	PAA13	PAA14	PAA15	PAW01	PYA	PYA01	PYA02	PYA03				
176																									

MEMO

0-28	VENTILATION SYSTEM
FIG-NO.	

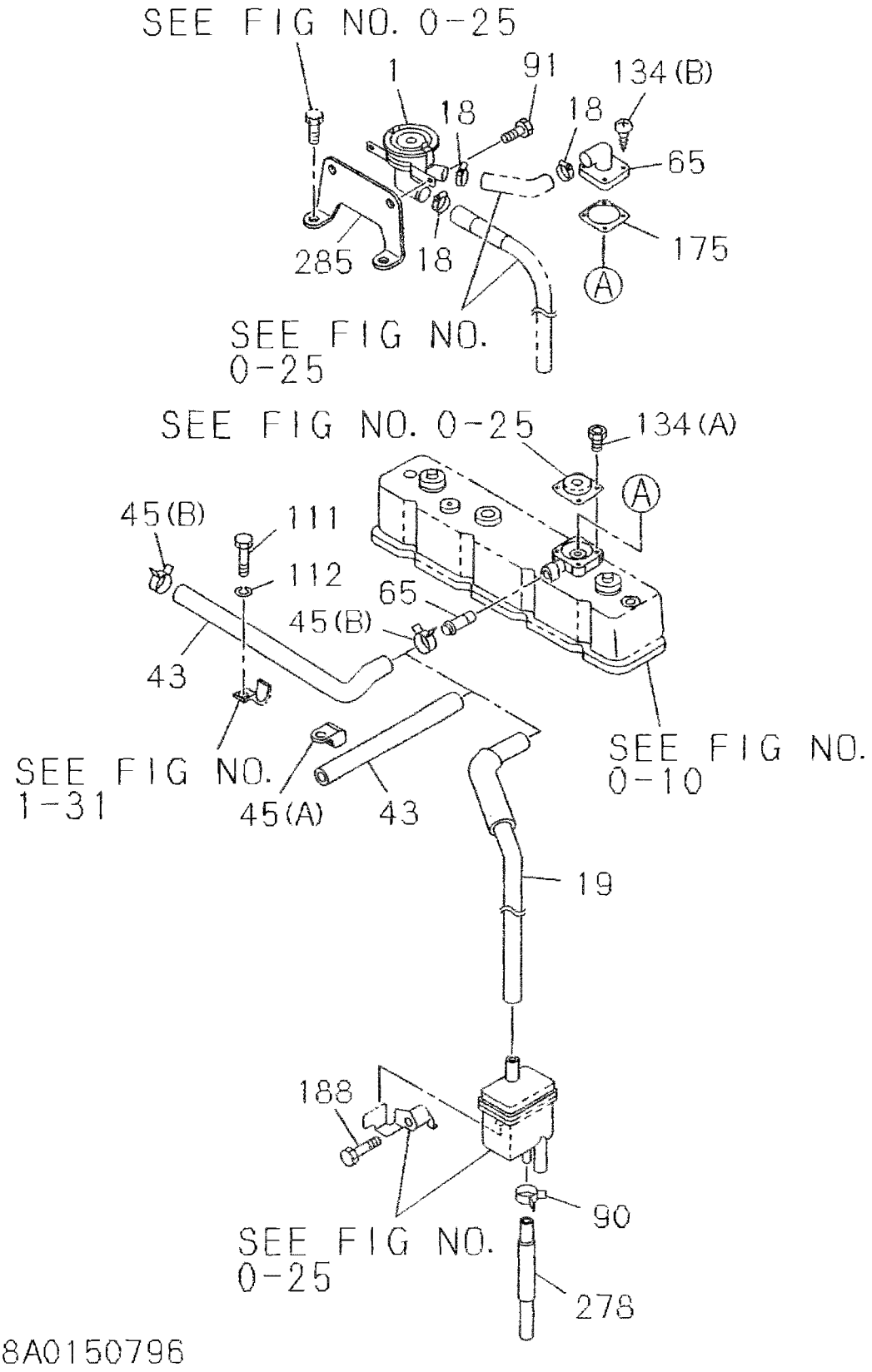

VENTILATION SYSTEM

0-28 A
FIG-NO.

KEY. NO — PART NAME

Model: 4JB1

Model code header (columns A–Y, then Z, A–X):

PPPPP PPPPP PPPPP PPPPP PPPP PPPPP PPPPP PPPPP PPPPP
AAAAA AAAAA AAAAA AAAAA ABBB DDFHK KKKKK KLLLL LLNNN
0000 00001 11111 11122 2 00 0 0000L L U000 00 00
1234 56892 33456 78901 2 23 1 1234 0 G1122 11
U 1 U U U
G G F G

ABCDE FGHIJ KLMNO PQRST UVWXY ZABCD EFGHI JKLMN OPQRS TUVWX

KEY NO	PART NAME / PART NUMBER	I T C	APPLIED DATE	L R	QTY	Models (A–Y)	Models (Z, A–X)	Remarks
19	HOSE; RUBBER BREATHER							
	894465-6600		9503-		1	A B C D E F G H I J K L M N O P Q R S T U	K L M N O P Q R S	
	897037-1581		9503-		1		B	
	897018-5510		9503-		1		C G	
43	HOSE; PCV							
	894465-6600		9610-		1		D E F H	
45	CLIP; PCV HOSE							
(A)	894176-8071		9503-9610		1	M N S T U V W	D E F	ID=21
(B)	894121-1131		9503-		1	A B C D E F G H I J K L M N O P Q R S T U	B C D E F G H K L M N O P Q R S	ID=20.4
65	PIPE; BREATHER							
	894250-6151		9503-		1	A B C D E F G H I J K L M N O P Q R S T U V W X	Z A B C D E F G H I J K L M N O P Q R S	
111	BOLT; CLIP							
	050040-8200		9503-		1	M N S T U V W	D E F	M8X20 W/LK WASHER
112	WASHER; LK. CLIP							
	909150-5080		9503-		1	A B C D E F G H I J K L M N O P T	Z A B C K L M N O P Q R S	ID=8
134	SCREW; VENTILATOR							
(A)	903910-4080		9503-		4	A B C D E F G H I J K L M N O P Q R S T U V W X	Z A B C D E F G H I J K L M N O P Q R S	M4X8 W/PL WASHER

0-28 B VENTILATION SYSTEM

FIG-NO.

KEY NO	PART NAME / PART NUMBER	ITC	APPLIED DATE	LR	QTY	4JB1 (ABCDEFGHIJKLMNOPQRSTUVWXY)	A-4JB1 (ZABCDEFGHIJKLMNOPQRSTUVWX)	Remarks
1	BREATHER; AIR							
	894334-8200		9503-		1	RST		
18	CLIP; RUBBER HOSE, AIR BREATHER							
	109704-0940		9503-		3	RST		ID=36
19	HOSE; RUBBER BREATHER							
	897021-3110		9503-		1	AB		
	897071-8101		9503-		1	CDE	N	
	894465-6600		9503-		1	FG IJKLMNOP UVW	ZABCDE H JKLM OP	
	897192-7700		9712-		1		T	
	894465-6600	C	9503-9708		1		F	
	897071-8101		9709-		1		F	
	897134-9121		9503-		1		Q S	
	897139-2260		9503-		1		R	
43	HOSE; PCV							
	897171-2610		9503-		1	H	G I	
45	CLIP; PCV HOSE							
(B)	894121-1130		9705-		1	UV		
65	PIPE; BREATHER							
	894250-6151		9503-		1	ABCDEFGHIJKLMNOP UVW	ZABCDEFGHIJKLMNOPQRST	
	894334-8660		9503-		1	RST		
90	CLIP; RUBBER HOSE							
	894238-5710		9503-		2	CDE	F N	ID=13
	894238-6100		9712-		2		T	ID=13
91	BOLT; AIR BREATHER							
	050040-8160	A	9503-9804		2	RST		M8X16 W/LK WASHER
	028080-8120		9805-		2	RST		M8X16
112	WASHER; LK, CLIP							
	909150-5080		9503-		1	AB DEFG IJKL P W		ID=8
134	SCREW; VENTILATOR							
(A)	903910-4080		9503-		4	ABCDEFGHIJKLMNOP UVW	ZABCDEFGHIJKLMNOPQRST	M4X8 W/PL WASHER
(B)	903920-4140		9503-		4	RST		
175	GASKET; VLV TO HD COVER							
	894163-3690		9503-		1	RST		
188	BOLT; BRKT							
	050040-8500		9503-		1	CDE	F N	M8X50 W/LK WASHER
278	HOSE; RUBBER, CATCH TANK TO OIL							
	897071-8081		9503-		1	CDE	F N	
	897192-7690		9503-		1		T	
285	BRACKET; AIR BREATHER							
	894334-8861		9503-		1	RST		

MEMO

0-30	WATER PUMP AND CORROSION RESISTOR
FIG-NO.	

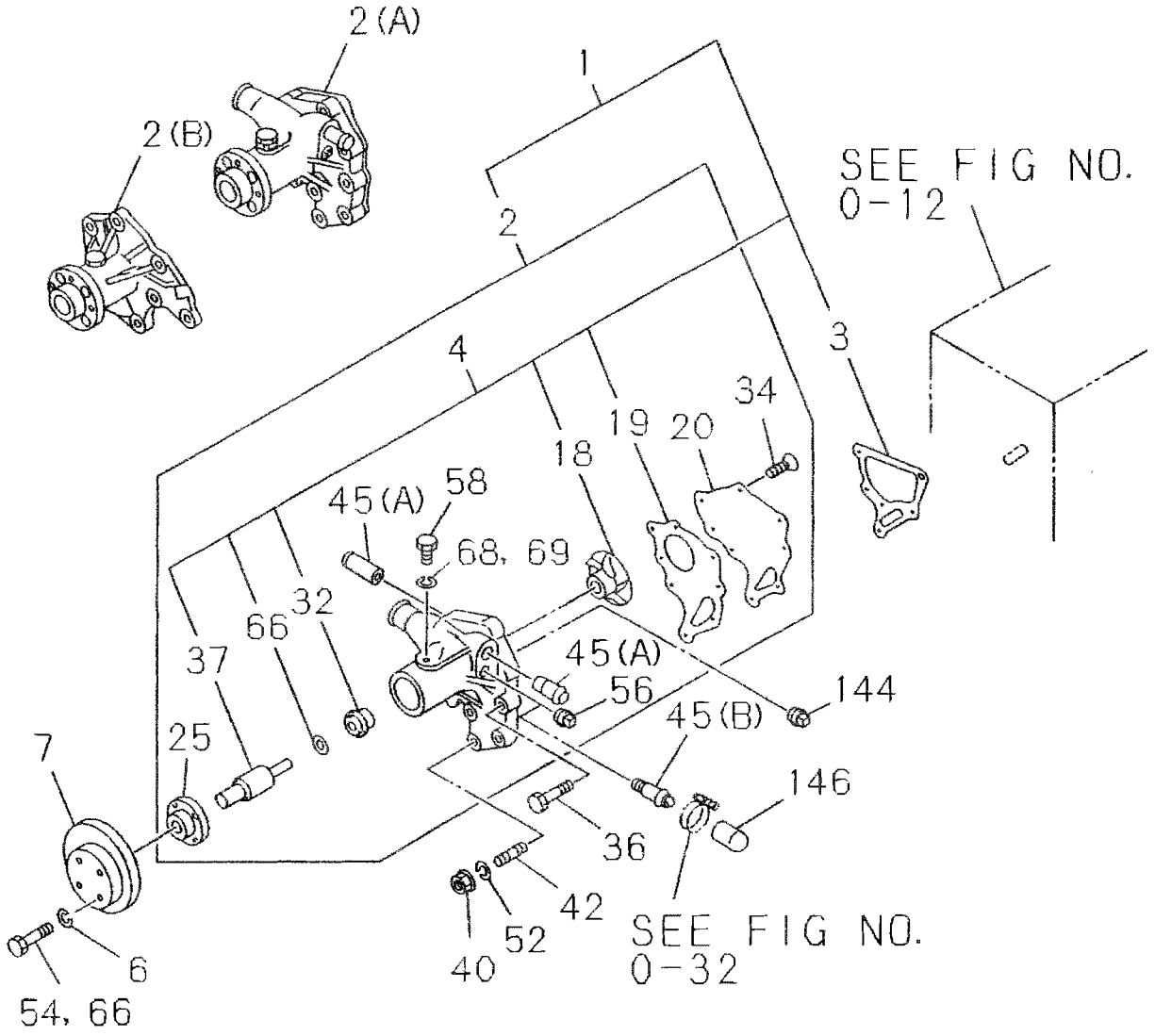

030A0150796

WATER PUMP AND CORROSION RESISTOR

FIG-NO. 0-30 A

KEY NO	PART NAME / PART NUMBER	T/C	APPLIED DATE	L/R	QTY	4JB1 (ABCDEFGHIJKLMNOPQRSTUVWXYZABCDEFGHIJKLMNOPQRSTUVWX)	Remarks
1	PUMP ASM; WATER, W/GASKET						
	897021-3160		9503-		1	AB DEFGHIJKLMNOPQRSTU ZA QRS	
	897028-5890		9503-		1	V	
	897028-5900		9503-		1	WX B KLMNOP	
	897021-3160		9509-9712	*	1	F	
	897123-3300		9801-		1	F H	
	897045-1600		9503-		1	IJ	
2	PUMP ASM; WATER						
(A)	894423-7531		9503-		1	AB DEF HI KLM PQRS U ZA QRS	
(A)	894338-8480		9503-		1	C C	
(A)	894423-7531		9503-9505		1	G J NO T	
(A)	894338-8480		9506-		1	G J NO T	
(A)	894129-3321		9503-		1	V	
(A)	894170-1253		9503-		1	B KLMNOP	
(A)	894461-1730		9503-9510		1	DE G	
(A)	894338-8480		9511-		1	DE G	
(A)	894461-1730		9503-9508		1	F	
(A)	894423-7531	C	9509-9712		1	F	
(A)	897123-3290		9801-		1	F H	
(A)	897029-1071		9503-		1	IJ	
(A)	894170-1253		9402-9402		1	WX	
(B)	894335-9572		9403-		1	WX	
3	GASKET; PUMP TO C/BL — ALSO INCLUDED IN GASKET SET(ENGINE)						
	894178-0810		9503-		1	ABCDEFGHIJKLMNOPQRSTU ZA CDEFGH QRS	
	894129-3330		9503-		1	V	
	894422-4290	C	9410-9410		1	WX B KLMNOP	
	897095-5120		9411-		1	WX B KLMNOP	
	897029-4101	C	9410-9410		1	IJ	
	897090-8810		9411-		1	IJ	
4	REPAIR KIT; WATER PUMP						
	897028-5970		9503-		1	WX B KLMNOP	
	894322-7940		9503-		1	ABCDEFGHIJKLMNOPQRSTU ZA CDEFGH QRS	
	897028-5960		9503-		1	V	
	897045-1810		9503-		1	IJ	
7	PULLEY; WATER PUMP						
	894427-3602		9503-		1	ABCDEF HIJKLMNOPQRSTUV ZA C HIJ QRS	1-GROOVE
	894429-4281		9408-		1	G	1-GROOVE
	894149-3591		9503-		1	WX B KLMN	1-GROOVE
	894146-6381		9503-9510		1	DE G	1-GROOVE
	894427-3602		9511-		1	DE G	1-GROOVE
	894146-6381		9503-9510		1	F	1-GROOVE
	894429-4281		9511-		1	F	1-GROOVE
	894453-9661		9503-		1	OP	1-GROOVE
18	IMPELLER; WATER PUMP						
	894250-1630		9503-		1	ABCDEFGHIJKLMNOPQRSTU ZA CDEFGH QRS	
	513621-0130		9503-		1	V	
	894114-7270		9503-		1	WX B KLMNOP	
	894114-7270		9503-		1	IJ	

0-30 A WATER PUMP AND CORROSION RESISTOR

FIG-NO.

4JB1

KEY NO	PART NAME / PART NUMBER	ITC	APPLIED DATE	LR	QTY	PPPPP AAAAA 0000 1234	PPPPP AAAAA 00001 56892	PPPPP AAAAA 11111 33456 U G	PPPPP AAAAA 11122 78901	PPPP ABBB 2 00 2 23	PPPPP DDFHK 0 1	PPPPP KKKKK 0000L 1234	PPPPP KLLLL L U00 0 G11 1 U G	PPPPP LLNNN 00 00 22 11 U U F G		Remarks
						ABCDE	FGHIJ	KLMNO	PQRST	UVWXY	ZABCD	EFGHI	JKLMN	OPQRS	TUVWX	
19	GASKET: COVER TO BODY															
	894130-3200		9503-		1					V						
	894170-1280		9503-		1					WX	B		KLMN	OP		
	897043-1871		9503-		1							I	J			
20	COVER: WATER PUMP															
	894130-3190		9503-		1					V						
	894170-1270		9503-		1					WX	B		KLMN	OP		
	897042-8801		9503-		1							I	J			
25	CENTER: WATER PUMP															
	513642-0640		9503-		1	AB DE	F HI	KLM	PQRS	UVWX	ZAB	HI	JKLMN	OPQRS		
	894452-0910		9503-		1	C					C					
	513642-0640		9503-9505		1		G J	NO	T							
	894452-0910		9506-		1		G J	NO	T							
	894441-8470		9503-9510		1						D	E G				
	894452-0910		9511-		1						D	E G				
	894441-8470		9503-9508		1							F				
	513642-0640		9509-		1							F				
32	SEAL UNIT: WATER PUMP															
	894422-3260		9503-		1	ABCDE	FGHIJ	KLMNO	PQRST	UVWX	ZABCD	EFGHI	JKLMN	OPQRS		
34	SCREW: COVER TO BODY, WATER PUMP															
	903065-8160		9503-		3					VWX	B	I	JKLMN	OP		
36	BOLT: WATER PUMP TO C/BL															
	509000-0841	A	9503-9804		5	ABCDE	FGHIJ	KLMNO	PQRST	U	ZA CD	EFG		QRS		M8X55 W/LK WASHER
	109044-0711		9805-		5	ABCDE	FGHIJ	KLMNO	PQRST	U	ZA CD	EFGH		QRS		M8X55
	050040-8500	A	9503-9804		5					V						M8X50 W/LK WASHER
	028080-8450		9805-		5					V						M8X50
	509000-2281	A	9503-9804		2					V						
	109044-0730		9805-		2					V						
	050040-8400	A	9503-9804		1					WX	B	I	JKLMN	OP		M8X40 W/LK WASHER
	028080-8450		9805-		1					WX	B	I	JKLMN	OP		M8X40
	509000-0841	A	9503-9804		2					WX		I	JKL	OP		M8X55 W/LK WASHER
	109044-0711		9805-		2					WX		I	JKL	OP		M8X55
	894205-9861	A	9503-9804		2						B		MN			M8X65
	028080-8600		9805-		2						B		MN			M8X65
37	BEARING UNIT: WATER PUMP															
	894110-5600		9503-		1	ABCDE	FGHIJ	KLMNO	PQRST	UVWX	ZABCD	EFGHI	JKLMN	OPQRS		
40	NUT: WATER PUMP															
	894224-8290		9503-		2	ABCDE	FGHIJ	KLMNO	PQRST	U	ZA CD	EFGH		QRS		M8
	909110-4080		9503-		3					WX	B	I	JKLMN	OP		M8
42	STUD: WATER PUMP															
	904110-8220		9503-		2	ABCDE	FGHIJ	KLMNO	PQRST	U	ZA CD	EFGH		QRS		M8X22 L=33
	904110-8400		9503-		3					WX	B	I	JKLMN	OP		M8X40 L=52
45	JOINT: HTR HOSE, WATER PUMP															
(A)	894111-6150		9503-		1					VWX	B	I	JKLMN	OP		

WATER PUMP AND CORROSION RESISTOR

0-30 A
FIG-NO.

KEY NO	PART NAME / PART NUMBER	ITC	APPLIED DATE	LR	QTY	4JB1 (ABCDE FGHIJ KLMNO PQRST UVWXY ZABCD EFGHI JKLMN OPQRS TUVWX)	Remarks
45	JOINT: HTR HOSE, WATER PUMP						
(B)	909903-6310		9403-		1	WX	PT3/8 & OD=18.3 L=47
52	WASHER: LK, WATER PUMP						
	909150-5080		9503-		3	WX B I JKLMN OP	ID=8
54	BOLT: PULLEY						
	050040-6120		9511-		4	F	M6X16 W/LK WASHER
	050040-6500		9711-		4	H	M6X16 W/LK WASHER
	050040-8160		9511-		4	D E G	M6X16 W/LK WASHER
	050040-6160		9503-9510		4	D E G	M6X16 W/LK WASHER
	050040-6160	C	9503-9510		4	F	M6X16 W/LK WASHER
56	PLUG: TAPER SCREW						
	509605-0050		9503-		1	VWX B I JKLMN OP	PT3/8
58	PLUG: HTR						
	909814-0141		9503-		1	ABCDE FGHIJ KLMNO PQRST UVWX ZABCD EFGHI JKLMN OPQRS	
66	SEAL: SECONDARY						
	913639-0010		9503-		1	ABCDE FGHIJ KLM O PQRST UVWX ZABCD EFGHI JKLMN OPQRS	
68	ADAPTER: GREASE NIPPLE						
	909150-5080		9503-		1	ABCDE FGHIJ KLMNO PQRST UVWX ZABCD EFGHI JKLMN OPQRS	ID=8
146	CAP: JOINT						
	894414-6880		9403-		1	WX F H	

0-30 B WATER PUMP AND CORROSION RESISTOR

FIG-NO.

KEY. NO — PART NAME

KEY NO	PART NUMBER	ITC	APPLIED DATE	L R	QTY	4JB1 (ABCDEFGHIJKLMNOPQRSTUVWXY)	A-4JB1 (ZABCDEFGHIJKLMNOPQRSTUVWX)	Remarks
1	PUMP ASM: WATER, W/GASKET							
	897021-3160		9503-		1	F G H I J K M O P W		
	897028-5900		9503-		1	C N R S T		
	897123-3300		9503-		1	U V	P T	
2	PUMP ASM: WATER							
(A)	894338-8480		9503-		1	A B D E L	Z A B C D E F G H I J L M N O Q S	
(A)	894170-1253		9503-		1	C N	K R	
(A)	894423-7531		9503-		1	F G H I J K M O P W		
(A)	897123-3290		9801-		1	U V	P T	
(B)	894335-9577		9503-		1	R S T		
3	GASKET: PUMP TO C/B --ALSO INCLUDED IN GASKET SET(ENGINE)							
	894178-0810		9503-		1	A B D E F G H I J K L M O P U V W	Z A B C D E F G H I J L M N O P Q S T	
	894422-4290	C	9410-9410		1	C N R S T		
	897095-5120		9411-		1	C N R S T	K R	
4	REPAIR KIT: WATER PUMP							
	894322-7940		9503-		1	A B D E F G H I J K L M O P U V W	Z A B C D E F G H I J L M N O P Q S T	
	897028-5970		9503-		1	C N R S T	K R	
6	WASHER: PL, PULLEY							
	909164-7060		9806-		4		P	
7	PULLEY: WATER PUMP							
	894427-3602		9503-		1	A B D E F G H I J K L M O P U V W	Z A B C D E F G H I J L M N O P Q T	I-GROOVE
	894149-3591		9503-		1	C N R S	K R	I-GROOVE
	897036-9560		9503-		1	T		I-GROOVE
	894429-4281		9503-		1		S	I-GROOVE
18	IMPELLER: WATER PUMP							
	894250-1630		9503-		1	A B D E F G H I J K L M O P U V W	Z A B C D E F G H I J L M N O P Q S T	
	894114-7270		9503-		1	C N R S T	K R	
19	GASKET: COVER TO BODY							
	894170-1280		9503-		1	C N R S T	K R	
20	COVER: WATER PUMP							
	894170-1270		9503-		1	C N R S T	K R	
25	CENTER: WATER PUMP							
	894452-0910		9503-		1	A B D E H L U V	Z A B C D E F G H I J L M N O P Q S T	
	513642-0640		9503-		1	C F G I J K M N O P R S T W	K R	
32	SEAL UNIT: WATER PUMP							
	894422-3260		9503-		1	A B C D E F G H I J K L M N O P R S T U V W	Z A B C D E F G H I J L M N O P Q R S T	
34	SCREW: COVER TO BODY, WATER PUMP							
	903065-8160		9503-		3	C N R S T	K R	
36	BOLT: WATER PUMP TO C/BL							
	509000-0841	A	9503-9804		5	A B D E F G I J K L M O P W	Z A B C D E F G Q S	M8X55 W/LK WASHER
	109044-0711		9805-		5	A B D E F G H I J K L M O P U V W	Z A B C D E F G H I J L M N O P Q S T	M8X55

WATER PUMP AND CORROSION RESISTOR

0-30 B
FIG-NO.

KEY NO	PART NAME	PART NUMBER	ITC	APPLIED DATE	LR	QTY	4JB1	A-4JB1	Remarks
							PPPPP PPPPP PPPPP P PPT TTT YYYYY VVVWW WWWWW W TTP PPP 0000 00 0 000000 0 QQB KKX 1234 12 2 346789 0 0 1 1	PPPPP PPPPP PPPPP PPPPP P AAAAA AAAAA AAAAA AAYYY Y AAAAA AAAAA AAAAA AWAAA A 0000 00000 11111 10 00 0 1234 56789 01234 51 12 3	
							ABCDE FGHIJ KLMNO PQRST UVWXY	ZABCD EFGHI JKLMN OPQRS TUVWX	
36	BOLT: WATER PUMP TO C/BL								
		050040-8400	A	9503-9804		1	C N RST	R	M8X40 W/LK WASHER
		028680-8400		9805-		1	C N RST	K R	M8X40
		894205-9861	A	9503-9804		2	C	R	M8X65
		028080-8600		9805-		2	C	K R	M8X65
		509000-0841	A	9503-9804		2	N RST		M8X55 W/LK WASHER
		109044-0711		9805-		2	N RST		M8X55 W/LK WASHER
37	BEARING UNIT: WATER PUMP								
		894110-5600		9503-		1	ABCDE FG IJ KLMNO P RST W	ZABCD EFGHI JKLMN OPQRS T	
40	NUT: WATER PUMP								
		894224-8290		9503-		2	AB DE FGHIJ KLM O P UVW	ZABCD EFGHI J LMN OPQ S T	M8
		909110-4080		9503-		3	C N RST	K R	M8
42	STUD: WATER PUMP								
		904110-8220		9503-		2	AB DE FGHIJ KLM O P UVW	ZABCD EFGHI J LMN OPQ S T	M8X22 L=33
		904110-8400		9503-		3	C N RST	K R	M8X40 L=52
45	JOINT: HTR HOSE. WATER PUMP								
		894111-6150		9503-		1	C N RST	K R	
52	WASHER: LK. WATER PUMP								
		909150-5080		9503-		3	C N RST	K R	ID=8
54	BOLT: PULLEY								
		050140-8450		9503-		4	J		M8X45 W/WASHER
		050140-8140		9503-		4	K W		M8X14
56	PLUG: TAPER SCREW								
		509605-0050		9503-		1	C N	K R	PT3/8
58	PLUG: HTR								
		909814-0141		9503-		1	ABCDE FGHIJ KLMNO P RST UVW	ZABCD EFGHI JKLMN OPQRS T	
66	SEAL: SECONDARY								
		913639-0010		9503-		1	ABCDE FGHIJ KLMNO P RST UVW	ZABCD EFGHI JKLMN OPQRS T	
69	GASKET: PLUG. HTR								
		909150-5080		9503-		1	ABCDE FGHIJ KLMNO P RST UVW	ZABCD EFGHI JKLMN OPQRS T	ID=8
144	PLUG: THERMOMETER								
		909661-0050		9801-		1	V		
146	CAP: JOINT								
		894414-6880		9806-		1		P	

0-31	THERMOSTAT AND HOUSING
FIG-NO.	

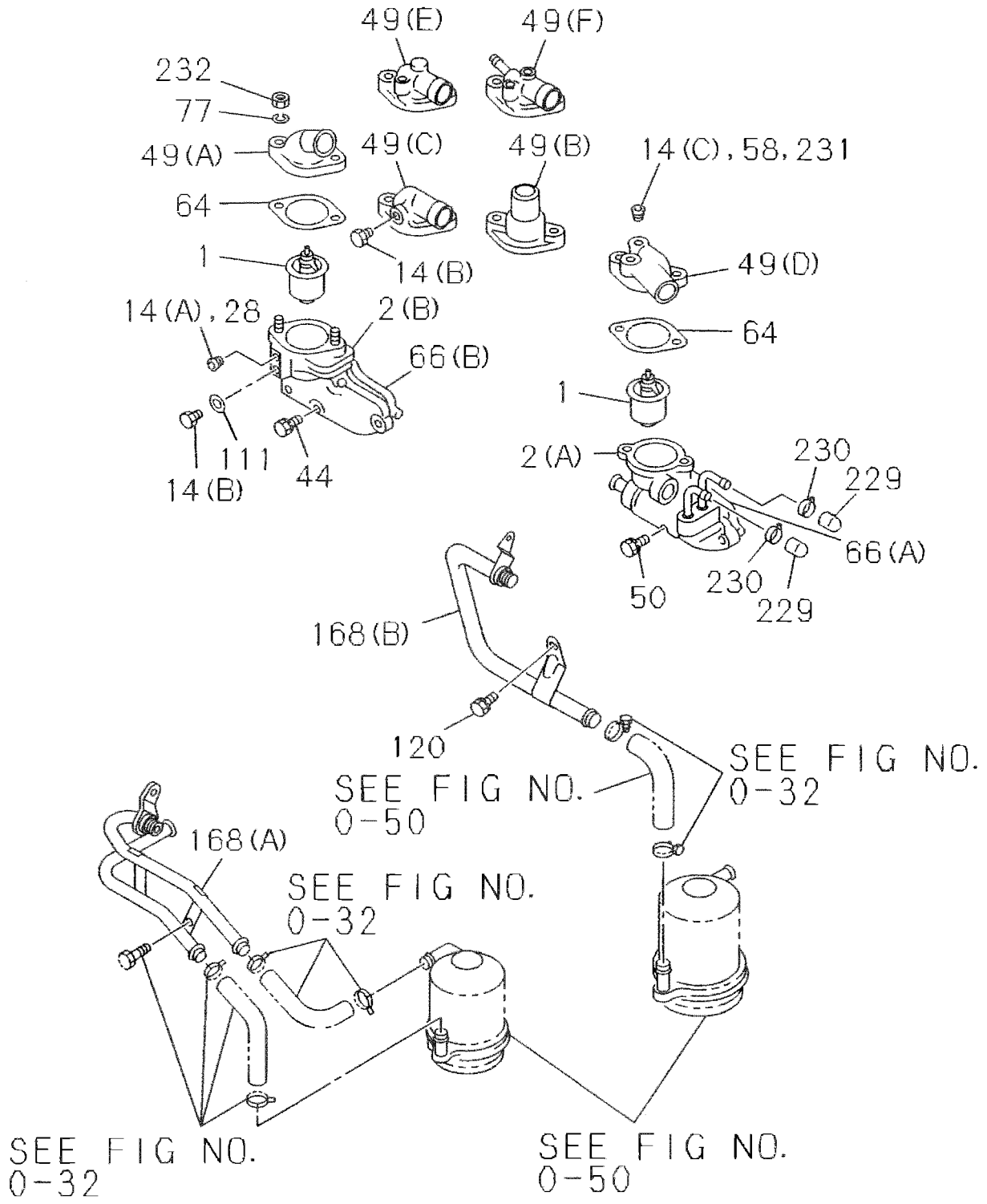

031A0150796

THERMOSTAT AND HOUSING

0-31 A

FIG-NO.

KEY NO	PART NAME / PART NUMBER	ITC	APPLIED DATE	LR	QTY	4JB1 ABCDEFGHIJKLMNOPQRSTUVWXYZABCDEFGHIJKLMNOPQRSTUVWX	Remarks
1	THERMOSTAT						
	894214-9620		9503-		1	ABCDE FGHIJ KLMNO PQRST UV ZA CDEFGHI J QRS	82°C
	894382-5460		9503-		1	WX B KLMNOP	76.5°C
2	HOUSING; THERMOSTAT						
(A)	894125-8531		9503-		1	A F T DE G	
(A)	894428-8120		9503-		1	BCDE GHIJ KLMNOPQRS U ZA	
(A)	894129-3340		9503-		1	V	
(A)	894336-5341		9503-		1	C	
(A)	894125-8513		9503-		1	F H QRS	
(B)	894170-1292		9503-		1	WX KLMNOP	
(B)	897018-6640		9503-		1	B IJ	
14	PLUG; SW						
(A)	509605-0050		9503-		1	ABC FGHIJ NOPQ S UVWX ZAB HI KLMNOPQRS	PT3/8
(B)	909661-0050		9503-		1	AB D F H J MNO RST WX Z B DE G IJKL OP	M16X8 PLUG
(B)	909661-0050		9503-		2	C	M16X8 PLUG
28	PLUG; HTR						
	509605-0050		9503-		2	BCDE GHIJ KLMNOPQRST U	PT3/8
44	BOLT; HSG TO HD						
	050040-8300	A	9503-9804		3	ABCDEFGHIJ KLMNOPQRST U ZA CDEFG QRS	M8X30 W/LK WASHER
	028680-8300		9805-		3	ABCDEFGHIJ KLMNOPQRST U ZA CDEFGH QRS	M8X30
	050040-8700	A	9503-9804		2	ABCDEFGHIJ KLMNOPQRST U ZA CDEFG QRS	M8X70 W/LK WASHER
	028080-8700		9805-		2	ABCDEFGHIJ KLMNOPQRST U ZA CDEFGH QRS	M8X70
	050040-8350	A	9503-9804		3	V	M8X35 W/LK WASHER
	028680-8350		9805-		3	V	M8X35
	050040-8450	A	9503-9804		2	V	M8X45 W/LK WASHER
	028080-8450		9805-		2	V	M8X45
	050040-8350	A	9503-9804		2	WX B IJKLMNOP	M8X35 W/LK WASHER
	028680-8350		9805-		2	WX B IJKLMNOP	M8X35
	028080-8160		9805-		3	WX B IJKLMNOP	M8X20
	050040-8200	A	9503-9804		3	WX B IJKLMNOP	M8X20 W/LK WASHER
49	PIPE; WATER OUTLET						
(A)	913713-0641		9503-		1	I	
(A)	913713-0781		9503-		1	V G IJ	
(B)	913713-0380	C	9503-9608		1	ZA C F	
(B)	897169-0150		9609-		1	ZA C F	
(C)	894152-5950		9503-		1	ABCDE H KL PQR WX B H KLMNOPQRS	
(D)	894254-6011		9503-		1	FG J NO S U	
(E)	894368-5890	A	9503-9606		1	M T	
(E)	897139-7120		9607-		1	M T	
64	GASKET; OUTLET PIPE TO HSG					—ALSO INCLUDED IN GASKET SET(ENGINE)	
	894362-2020	C	9402-9402		1	ABCDEFGHIJ KLMNOPQRST VWX Z BCDEFG IJKLMNOPQRS	
	894365-6741		9403-		1	ABCDEFGHIJ KLMNOPQRSTUVWX ZABCDEFGHIJKLMNOPQRS	
66	GASKET; THERMOSTAT HSG					—ALSO INCLUDED IN GASKET SET(ENGINE)	
(A)	894258-2360	C	9410-9410		1	ABCDEFGHIJ KLMNOPQRST V Z CDEFG QRS	
(A)	894365-6751		9411-		1	ABCDEFGHIJ KLMNOPQRSTUV ZA CDEFGH QRS	
(B)	894171-2940	C	9410-9410		1	WX B IJKLMNOP	

0-31 A THERMOSTAT AND HOUSING

FIG-NO.

KEY NO	PART NAME / PART NUMBER	ITC	APPLIED DATE	LR	QTY	4JB1 (ABCDEFGHIJKLMNOPQRSTUVWXYZABCDEFGHIJKLMNOPQRSTUVWX)	Remarks
66	GASKET: THERMOSTAT HSG					—ALSO INCLUDED IN GASKET SET(ENGINE)	
(B)	897090-8790		9411-		1	WX B IJKLMNOP	
77	WASHER: LK						
	909150-5080		9503-		2	WX B KLMNOP	ID=8
111	GASKET: PLUG, WATER PIPE HOLE						
	909571-3160		9503-		1	AB D FGH JKLMNO RSTU WX Z B DE G IJKLMNOPQRS	
	909571-3160		9503-		2	C	
168	PIPE: WATER, COOLER						
(B)	894319-5330		9503-		1	F KL	
229	CAP: HEATER PIPE						
	894414-6880		9503-		2	F H QRS	
230	CLIP: CAP, HEATER PIPE						
	909915-6422		9503-		2	F H QRS	ID=25
231	PLUG: JOINT						
	509605-0050		9503-		2	FG J NO S U	PT3/8
232	NUT: PIPE, WATER OUTLET						
	909110-5080		9503-		2	WX B KLMNOP	M8

THERMOSTAT AND HOUSING

0-31 B
FIG-NO.

KEY NO	PART NAME / PART NUMBER	I TC	APPLIED DATE	LR	QTY	4JB1 (PPPPPPPPPPPPPPPP PPTTTT / YYYYYVVVWWWWWWWW TTPPPP / 0000 00 0000000 QQBKKX / 1234 12 2346789 0 0 / 1 1) ABCDEFGHIJKLMNOPQRSTUVWXY	A-4JB1 (PPPPPPPPPPPPPPPPPPPPP / AAAAAAAAAAAAAAAAAYYYY / AAAAAAAAAAAAAAAAWAAAA / 00000000111110 000 / 123456789012345 1 123) ZABCDEFGHIJKLMNOPQRSTUVWX	Remarks
1	THERMOSTAT							
	894214-9620		9503-		1	AB DEFGHIJKLM OP UVW	ZABCDEFGHIJ LMNOPQ ST	82°C
	894382-5460		9503-		1	C N RST	K R	76.5°C
2	HOUSING; THERMOSTAT							
(A)	894428-8120		9503-		1	AB DE	ZABCDEFGHIJ LMNOPQ ST	
(A)	894125-8531		9503-		1	HI L P		
(A)	894125-8513		9503-		1	JK M O UV		
(A)	894478-7042		9503-		1	W		
(A)	897018-6640		9503-		1		K R	
(B)	894170-1292		9503-		1	C N RST		
14	PLUG; SW							
(C)	509605-0050		9806-		1		JK O T	PT3/8
(C)	509605-0050		9503-		2	C J O	AB DEF R	PT3/8
(A)	909661-0050		9503-		1	ABCDE IJK MNO T W	Z CDEF QRS	M16X8 PLUG
(B)	909661-0050		9503-		1	ABCDE IJK MNO T VW	Z CD F H JKL NOPQRST	M16X8 PLUG
28	PLUG; HTR							
	509605-0050		9503-		2	ABCDE RST W	ZABCDEFGHIJ LMNOPQRST	PT3/8
44	BOLT; HSG TO HD							
	050040-8300	A	9503-9804		3	AB DEFGHIJKLM OP UVW	ZABCDEFG Q S	M8X30 W/LK WASHER
	028680-8300		9805-		3	AB DEFG IJKLM OP W	ZABCDEFGHIJ LMNOPQ ST	M8X30
	050040-8700	A	9503-9804		2	AB DEFGHIJKLM OP UVW	ZABCDEFG Q S	M8X70 W/LK WASHER
	028080-8700		9805-		2	AB DEFG IJKLM OP W	ZABCDEFGHIJ LMNOPQ ST	M8X70
	050040-8350	A	9503-9804		2	C N RST	R	M8X35 W/LK WASHER
	028680-8350		9805-		2	C N RST	K R	M8X35
	050040-8200	A	9503-9804		3	C N RST	R	M8X20 W/LK WASHER
	028080-8160		9805-		3	C N RST	K R	M8X20
49	PIPE; WATER OUTLET							
(A)	913713-0641		9503-		1	K		
(A)	513713-0471		9503-		1	RS		
(B)	913713-0380	C	9503-9608		1	DEF I P	Z Q	
(B)	897169-0150		9609-		1	DEF I P U	Z I PQ ST	
(C)	894152-5950		9503-		1	AB GH LMN T V	C GH K	
(D)	894254-6011		9503-		1	C J O	AB DEF J LMNO R	
(F)	894368-5870		9503-		1	W		
50	BOLT; OUTLET PIPE							
	050140-8300	A	9503-9804		2		ZABCDEFG Q S	M8X30 W/WASHER
	028680-8300		9805-		2	UV	ZABCDEFGHIJ LMNOPQ ST	M8X30
58	PLUG; WATER OUTLET PIPE					—ALSO INCLUDED IN GASKET SET(ENGINE)		
	509605-0050		9503-		1	V		
64	GASKET; OUTLET PIPE TO HSG					—ALSO INCLUDED IN GASKET SET(ENGINE)		
	894362-2020	C	9402-9402		1	ABCD RST W		
	894365-6741		9403-		1	ABCD RST W		
	894365-6741		9503-		1	EFGHIJKLMNOP UV	ZABCDEFGHIJKLMNOPQRST	
66	GASKET; THERMOSTAT HSG					—ALSO INCLUDED IN GASKET SET(ENGINE)		
	894258-2360	C	9410-9410		1	AB D W	ZA Q	

0-31 B THERMOSTAT AND HOUSING

FIG-NO.

KEY. NO	PART NAME / PART NUMBER	I T C	APPLIED DATE	L R	QTY	4JB1	A-4JB1	Remarks
66	GASKET: THERMOSTAT HSG					—ALSO INCLUDED IN GASKET SET(ENGINE)		
	894365-6751		9411-		1	AB DE H UVW	ZA HIJKLMNOPQ T	
	894365-6750	A	9503-9511		1	FG IJKLM OP		
	894365-6751		9512-		1	FG IJKLM OP	BCDEFG S	
	894171-2940	C	9410-9410		1	C N RST		
	897090-8790		9411-		1	C N RST	K R	
77	WASHER: LK							
	909150-5080		9503-		2	C N	K R	ID=8
111	GASKET: PLUG, WATER PIPE HOLE							
	909571-3160		9503-		1	ABCDEFGHIJKLMNO T VW	ZABCD FGHIJ LMNOPQ ST	
120	BOLT: PIPE FIX							
	050040-8120		9503-		2	W		M8X12 W/LK WASHER
	050140-8180		9705-		1	UV		M8X12 W/LK WASHER
	509605-0050		9503-		1		H JKLM O	M8X12 W/LK WASHER
168	PIPE: WATER, COOLER							
(A)	897033-3920		9503-		1	T		
(B)	894450-6270		9503-		1	L UV		
229	CAP: HEATER PIPE							
	894414-6880		9503-		2	JK M O UV		
232	NUT: PIPE, WATER OUTLET							
	909110-5080		9503-		2	C N RST	K R	M8

MEMO

0-32	WATER PIPING; ENGINE
FIG-NO.	

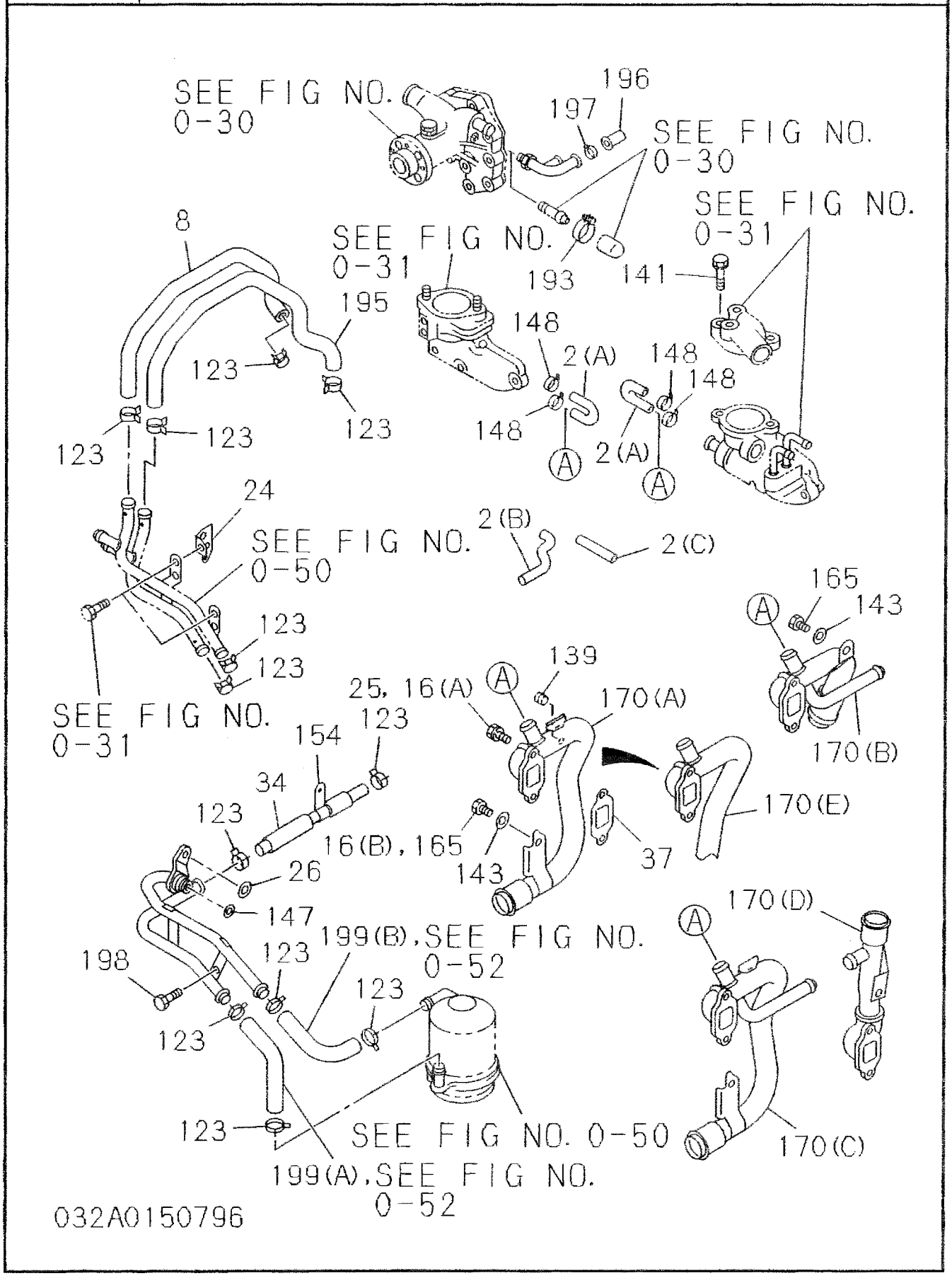

WATER PIPING; ENGINE

0-32 A FIG-NO.

KEY. NO	PART NAME / PART NUMBER	I T C	APPLIED DATE	L R	QTY	4JB1 (PPPPP AAAAA 0000 1234 ... / ABCDEFGHIJKLMNOPQRSTUVWXYZABCDEFGHIJKLMNOPQRSTUVWX)	Remarks
2	HOSE; WATER, BY-PASS						
(A)	894109-6811		9503-9709		1	F	
(A)	897180-2190		9710-		1	F H	
(A)	894109-6811		9503-		1	ABCDEFGHIJKLMNOPQRSTU ZA C G QRS	
(A)	894129-3730		9503-		1	V	
(A)	894328-8320		9503-		1	WX B IJKLMNOP	
(A)	894401-0790		9503-		1	DE	
16	BOLT; INL PIPE						
(B)	020801-0200	A	9503-9804		1	DE G	M10X20
(B)	028681-0200		9805-		1	DE G	M10X20
(A)	050040-8500		9710-		2	F H	
(A)	050040-8220	A	9503-9804		2	ABCDEFGHIJKLMNOPQRSTU ZA C KLM QRS	
(A)	028080-8200		9805-		2	ABCDEFGHIJKLMNOPQRSTU ZA CDE G KLM QRS	
37	GASKET; WATER PIPE					--ALSO INCLUDED IN GASKET SET(ENGINE)	
	894171-8980	C	9406-9406		1	ABCDEFGHIJKLMNOPQRSTU Z C KLMNOP RS	
	894365-6762		9407-		1	ABCDEFGHIJKLMNOPQRSTU ZA CDEFGH KLMNOPQRS	
123	CLIP; RUBBER, HOSE, OIL COOLER						
	894413-8220		9503-		4	KL	ID=21.7
	909915-6422		9503-		4	F	ID=25
139	PLUG; WATER PIPE						
	509605-0050		9503-		1	S	PT3/8
	509605-0050		9503-9505		1	T	PT3/8
141	BOLT; WATER PIPE						
	050140-8300	A	9503-9804		2	ABCDEFGHIJKLMNOPQRSTUVWX Z CDEFG IJ QRS	M8X30 W/WASHER
	028680-8300		9805-		2	ABCDEFGHIJKLMNOPQRSTUVWX Z CDEFGHIJ QRS	M8X30
143	WASHER; PL. WATER PIPE						
	909150-5100		9503-		1	DEFGH	ID=10.2
148	CLIP; BYPASS HOSE						
	909715-0531		9503-		2	ABCDEFGHIJKLMNOPQRSTU ZA CDEFGH QRS	
	894413-8220		9503-		2	VWX B IJKLMNOP	ID=21.7
165	BOLT; PIPE TO BRKT						
	050140-8200		9503-		1	QRS	M8X20 W/WASHER
	028080-8160		9503-		1	QRS	M8X20
170	PIPE; WATER, INL						
(A)	894133-7444		9503-		1	ABC J NO TU KLMNOP	
(A)	894133-7444		9503-9709		1	F	
(A)	897180-1700		9710-		1	F H	
(A)	894435-8780		9503-		1	E I P	
(A)	894435-8780	A	9503-9610		1	D M R Z	
(A)	894316-3560		9611-		1	D M R Z	
(A)	894434-0711		9503-		1	G S	
(A)	894316-3560		9503-		1	H Q A	
(C)	894332-2900		9503-		1	C	
(C)	894174-6441		9503-		1	F	

0-32 A WATER PIPING; ENGINE

FIG-NO.

KEY. NO	PART NAME / PART NUMBER	ITC	APPLIED DATE	LR	QTY	4JB1 ABCDE (PA, PA01, PA02, PA03, PA04)	FGHIJ (PA05, PA06, PA08, PA09, PA12)	KLMNO (PA13, PA13UG, PA14, PA15, PA16)	PQRST (PA17, PA18, PA19, PA20, PA21)	UVWXY (PA22, PB, PB02, PB03)	ZABCD (PD, PD01, PF, PH, PK)	EFGHI (PK01, PK02, PK03, PK04, PKL)	JKLMN (PKL01, PL, PLUG, PL01, PL01UG)	OPQRS (PL02, PL02UF, PN, PN01, PN01UG)	TUVWX	Remarks
170	PIPE; WATER, INL															
(D)	894429-4270		9503-		1			KL								
(D)	894401-0780		9503-		1						D	E				
(E)	897018-5310		9503-		1							G				
(E)	897084-5080		9503-		1									QRS		
(E)	897180-1700		9710-		1							F H				
197	CLIP; CAP															
	909915-6422		9403-		1					WX						ID=25
	909915-6441		9710-		1					WX		F H				ID=25

WATER PIPING; ENGINE

0-32 B
FIG-NO.

KEY NO	PART NAME / PART NUMBER	ITC	APPLIED DATE	LR	QTY	4JB1	A-4JB1	Remarks
						PPPPP PPPPP PPPPP P PPT TTT YYYYY VVVWW WWWWW W TTP PPP 0000 00 0 000000 0 QQB KKX 1234 12 2 34678 9 0 0 1 1 ABCDE FGHIJ KLMNO PQRST UVWXY	PPPPP PPPPP PPPPP PPPPP P AAAAA AAAAA AAAAA AAYYY Y AAAAA AAAAA AAAAA AWAAA A 0000 00000 11111 10 00 0 1234 56789 01234 51 12 3 ZABCD EFGHI JKLMN OPQRS TUVWX	
2	HOSE: WATER, BY-PASS							
(A)	894328-8320		9503-		1	C N RST	K R	
(B)	894109-6811		9503-		1	AB DEFGHIJKLM OP	ZABCDEFGHIJ LMNO Q S	
(B)	897180-2190		9710-		1	UV	P T	
(C)	003216-1100		9503-		1	W		L=110
8	HOSE: RUBBER, HSG TO PIPE							
	897017-9150		9503-		1	W		
16	BOLT: INL PIPEHOSE							
	050040-8220		9503-		2	AB DEFG IJKLM OP W	ZABCDEFG Q S	
25	BOLT: WATER PIPE							
	050040-8500		9802-		2	UV	P	
	028080-8200		9503-		2	H	HIJ LMNO T	
26	DISTANCE: WATER PIPE							
	509503-1181		9503-		1	RST		
34	HOSE: RUBBER, WATER PIPE							
	894362-8790		9503-		1	RST		
37	GASKET: WATER PIPE					—ALSO INCLUDED IN GASKET SET(ENGINE)		
	894171-8980	C	9503-9602		1	AB DE W		
	894365-6762		9603-		1	AB DE UVW		
	894365-6762		9503-		1	FGHIJKLM OP	ZABCDEFGHIJ LMNOPQ ST	
123	CLIP: RUBBER, HOSE, OIL COOLER							
	894413-8220		9503-		4	L UVW		ID=21.7
	894413-8220		9503-		6	RST		ID=21.7
	894413-8220		9503-		8	W		ID=21.7
139	PLUG: WATER PIPE							
	509605-0050		9806-		1		J M	1
141	BOLT: WATER PIPE							
	050140-8300		9503-		2	AB DEFG IJKLM OP W		M8X30 W/WASHER
146	BOLT: EYE							
	894414-6880		9806-		1		P	
147	GASKET							
	909561-2180		9503-		1	L RSTUV		
148	CLIP: BYPASS HOSE							
	909715-0531		9503-		2	AB DEFGHIJKLM OP UV	ZABCDEFGHIJ LMNO Q S	
	909715-0531		9710-		1		P T	
	894413-8220		9503-		2	C N RSTUVW	K R	ID=21.7
	894413-8220		9710-		1		P T	ID=21.7
154	CLIP: WATER HOSE							
	894332-7860		9503-		1	RST		
	894413-8220		9503-		6	RS		

0-32 B WATER PIPING; ENGINE

FIG-NO.

Model applicability columns (codes read top to bottom in each column):

4JB1 column	A	B	C	D	E	F	G	H	I	J	K	L	M	N	O	P	Q	R	S	T	U	V	W	X	Y
Model	PY	PY01	PY02	PY03	PY04	PV	PV01	PV02	PW	PW02	PW03	PW04	PW06	PW07	PW08	PW09		PT0	PTQ01	TPB	TPK	TPK01	TPX		

A-4JB1 column	Z	A	B	C	D	E	F	G	H	I	J	K	L	M	N	O	P	Q	R	S	T	U	V	W	X
Model	PAA	PAA01	PAA02	PAA03	PAA04	PAA05	PAA06	PAA07	PAA08	PAA09	PAA10	PAA11	PAA12	PAA13	PAA14	PAA15	PAW01	PYA	PYA01	PYA02	PYA03				

KEY. NO	PART NAME / PART NUMBER	ITC	APPLIED DATE	L R	QTY	4JB1	A-4JB1	Remarks
154	CLIP: WATER HOSE							
	909915-6422		9503-		6		P	
170	PIPE: WATER, INL							
(A)	894133-7444		9503-		1	A B D E J M	Z D E H L O Q S	
(A)	894435-8780	A	9503-9610		1	F G I K O P		
(A)	894316-3560		9611-		1	F G H I K O P	I	
(A)	897017-7750		9503-		1	W		
(A)	894434-0711		9503-		1		A B F J M N	
(A)	894316-3560		9503-		1		C G	
(C)	897180-1700		9806-		1	U V	P T	
(B)	894438-6170		9503-		1	L		
193	CLIP: HEATER PIPE							
	909915-6422		9503-		2	J K M O U V W		ID=25
195	HOSE: PIPE TO HSG							
	897017-9160		9503-		1	W		
196	CAP: WATER PIPE							
	894365-3810		9503-		1	R S T		
197	CLIP: CAP							
	909915-6422		9503-		1	R S T		ID=25
198	BOLT: PIPE							
	050140-8180		9503-		1	R S T		M8X18 W/WASHER
199	HOSE: RUBBER, OIL COOLER							
(A)	894342-3870		9503-		1	R S		
(B)	894442-1621		9503-		1	R S W		

MEMO

0-33	FAN AND FAN BELT
FIG-NO.	

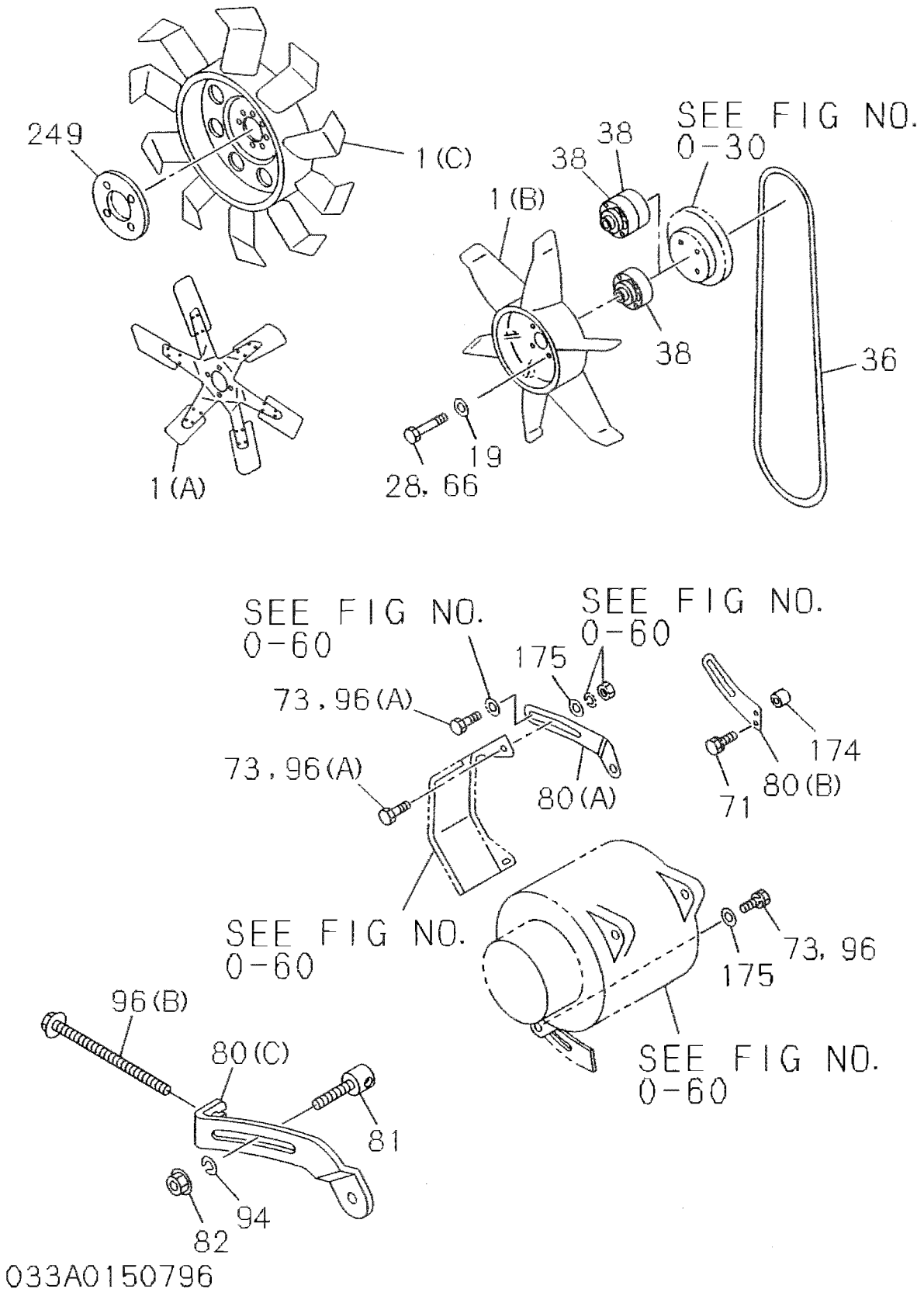

FAN AND FAN BELT

0-33 A

FIG-NO.

KEY NO	PART NAME	PART NUMBER	ITC	APPLIED DATE	LR	QTY	4JB1 PPPPP AAAAA 0000 1234	PPPPP AAAAA 00001 56892	PPPPP AAAAA 11111 33456 U G	PPPPP AAAAA 11122 78901	PPPP ABBB 2 00 2 23	PPPPP DDFHK 0 1	PPPPP KKKKK 0000L 1234	PPPPP LLLLL L U00 0 G11 1 U G	PPPPP LLNNN 00 22 11 U F G	Remarks
							ABCDEFGHIJ	KLMNOPQRST			UVWXY	ZABCD	EFGHI	JKLMN	OPQRS	TUVWX
1	FAN: COOLING															
(B)	894408-0790			9503-		1	AB				WX			MN	QRS	D=380-7-SUCT-PP
(B)	513660-2360			9503-9508		1	C									D=475-6-SUCT-SP
(B)	894435-0880			9503-		1	D			R		ZA				D=430-6-BLOW-PP
(B)	513660-3040			9503-		1	EF I				V					D=400-6-SUCT-SP
(B)	894342-6180			9503-		1	J	NOP								D=450-7-SUCT-PP
(B)	894342-6180			9407-		1	G									D=450-7-SUCT-PP
(B)	513660-3080			9503-		1	H			Q S						D=400-6-BLOW-PP
(B)	589136-6052			9503-		1			KL							D=540-7-SUCT-PP
(B)	513660-2860			9503-		1		M			T					D=450-8-SUCT-PP
(B)	894433-1650			9503-		1					U	C				D=430-6-SUCT-PP
(B)	894483-8940			9503-		1						B				D=430-6-BLOW-PP
(B)	894470-5530			9503-		1							I	J		D=380-6-BLOW-PP
(B)	513660-3150			9503-		1								KL	OP	D=380-6-BLOW-PP
28	BOLT: COOLING FAN															
	050040-8500			9503-		4	AB	F				ZA				M8X50 W/LK WASHER
	894205-9861			9503-		4	C									M8X65
	509000-0841			9503-		4	DE	IJ	N	P R		C				M8X55 W/LK WASHER
	010805-6500			9407-9407		4	G									M6X50
	050040-8600			9408-		4	G									M8X60 W/LK WASHER
	050040-8350			9503-		4	H		M	Q T			I	J		M8X35 W/LK WASHER
	509000-2281			9503-		4			KL							
	509030-0351		C	9410-9410		4			O							M8X53
	509000-0841			9411-		4			Q							M8X55 W/LK WASHER
	050040-8400			9503-		4				S						M8X40 W/LK WASHER
	050040-8450			9503-		4					U					M8X45 W/LK WASHER
	509030-0351			9503-		4					V					M8X53
	509030-0421			9503-		4					WX			KL	OP	
	509030-0291			9503-		4						B				M8X48
	050040-8160			9503-		4							DE G			M8X16 W/LK WASHER
	050040-6120			9503-		4							F			M6X12 W/LK WASHER
	894205-9871			9503-		4								MN	QRS	M8X75
36	BELT: COOLING FAN															
	894256-8000			9503-		1	ABC	F J	KLMN	P S	U	ZA CD	E G			1-PIECE, L=1041
	113671-0110			9503-		1	DE	H	KL O	QR						1-PIECE, L=1080
	894256-8000			9407-9407		1		G					F			1-PIECE, L=1061
	113671-0110			9408-		1		G					F			1-PIECE, L=1080
	113671-1270			9503-		1		I								1-PIECE, L=1061
	894407-6240			9503-		1				T						1-PIECE, L=1060
	894153-7210			9503-		1					V		I	J		1-PIECE, L=1151
	513671-1000			9503-		1					WX					1-PIECE, L=1130
	113671-2080			9503-		1						B		KLMN		1-PIECE, L=1130
	894129-3870			9503-		1									OP	1-PIECE, L=1166
	894256-8000			8603-9305		1									QRS	1-PIECE, L=1061
	894161-8410			9306-		1									QRS	1-PIECE, L=1051
38	SPACER: FAN															
	913642-0780			9503-		1	AB DEF	IJ	NOP	R	V	ZABC	H	KL	OP	
	513642-0601			9503-		1	C									
	913642-0761			9503-		1	DE	IJ	NOP	R	V	C				
	989136-4230			9503-		1		GH	M	Q T			I	JKL	OP	

0-33 A FAN AND FAN BELT

FIG-NO.

KEY NO / PART NAME

4JB1

KEY NO	PART NUMBER	ITC	APPLIED DATE	L R	QTY	A–E: PA, PA01, PA02, PA03, PA04	F–J: PA05, PA06, PA08, PA09, PA12	K–O: PA13UG, PA13, PA14, PA15, PA16	P–T: PA17, PA18, PA19, PA20, PA21	U–Y: PA22, PB, PB02, PB03	Z–D: PD, PD01, PF, PH, PK	E–I: PK01, PK02, PK03, PK04, PKL	J–N: PKL01, PL, PLUG, PL01, PL01UG	O–S: PL02, PL02UF, PN, PN01, PN01UG	T–X	Remarks
38	SPACER: FAN															
	913642-0770		9503-		1		G		S	U						
	913642-0790		9503-		1			KL		WX			MN	QRS		
	913642-0761		9503-		2					WX						
	913642-0730		9503-		1							F				
	989136-4230		9503-		2								KL	OP		
71	BOLT: ADJ PLATE, GEN															
	050040-8220	A	9503-9804		1	ABCDE	FGHIJ	KLMNO	PQRST	U	ZA C	I	J			M8X22 W/LK WASHER
	028080-8200		9805-		1	ABCDE	FGHIJ	KLMNO	PQRST	U	ZA C	I	J			M8X22
	050040-8500	A	9503-9804		2					V						M8X50 W/LK WASHER
	028080-8500		9805-		2					V						M8X22
	050040-8220	A	9503-9804		2					WX			KL	OP		M8X22 W/LK WASHER
	028080-8200		9805-		2					WX			KL	OP		M8X22
	050040-8280	A	9503-9804		2						B		MN			M8X28 W/LK WASHER
	028680-8300		9805-		2						B		MN			M8X22
	028680-8400		9805-		1									QRS		M8X22
	050040-8400	A	9503-9804		1									QRS		M8X40 W/LK WASHER
73	BOLT: GEN TO ADJ PLATE															
	050040-8250		9503-		1							I	J			M8X25 W/LK WASHER
80	PLATE: ADJ															
(A)	894423-7460		9503-		1	ABC	FG J	MNO	P ST	U	ZA C					
(A)	894431-5610		9503-		1	DE	HI	KL	QR							
(A)	894327-3131		9503-		1							F				
(A)	897036-9570		9503-		1							I	J			
(A)	894423-7460		8603-9305		1									QRS		
(A)	894327-3131		9306-		1									QRS		
(B)	894149-3580		9503-		1					V			KLMN	OP		
(B)	894338-1930		9503-		1					WX						
(B)	897018-6840		9503-		1						B					
96	BOLT: ADJ PLATE															
(A)	050040-8220		9503-		1	ABCDE	F HIJ	KLMNO	PQR T	UVWX	Z BC	F	KLMN	OP		M8X22 W/LK WASHER
(A)	050040-8350		9503-		1		G		S		A			QRS		M8X35 W/LK WASHER
174	SPACER: ADJ PLATE															
	509503-1171		9503-		1									QRS		
175	WASHER: PL, ADJ PLATE															
	909164-7080		9503-		1	ABCDE	FGHIJ	KLMNO	PQRST	UVWX	ZABC	F I	JKLMN	OPQRS		ID=8 OD=22

FAN AND FAN BELT

0-33 B

FIG-NO.

Model code header (4JB1): PYYYY 0000 1234 (A–D) · P (E) · PVVV 00 12 (F–H) … PWWWWWW 0 2346789 · PTTP Q0B 0 1 · TTT PPP KKX 0 1 … (letters A B C D E F G H I J K L M N O P Q R S T U V W X Y)

Model code header (A-4JB1): PAA 0001–PAA 0015, PAWA 0, PYA 001–003 (letters Z A B C D E F G H I J K L M N O P Q R S T U V W X)

KEY. NO	PART NAME / PART NUMBER	ITC	APPLIED DATE	LR	QTY	4JB1 (A B C D E F G H I J K L M N O P Q R S T U V W X Y)	A-4JB1 (Z A B C D E F G H I J K L M N O P Q R S T U V W X)	Remarks
1	FAN: COOLING							
(A)	897022-8100		9503-		1	P		D=380-6-BLOW-PP
(C)	897134-2910		9503-		1		A	D=380-10-SUCT-PP
(C)	897180-8771		9805-		1		M	D=380-10-SUCT-PP
(A)	513660-3080		9503-		1		C	D=400-6-BLOW-PP
(B)	894342-6180		9503-		1	ABCDE RS	Z B DEF KL N QRST	D=450-7-SUCT-PP
(B)	894435-0880		9707-		1		HI	D=450-7-SUCT-PP
(B)	513660-3150		9503-		1	FGHI		D=380-6-BLOW-PP
(B)	894408-0790		9503-		1	L		D=380-7-SUCT-PP
(B)	513660-3040		9503-		1	M T	G P	D=400-6-SUCT-PP
(B)	894483-8940		9503-		1	N		D=430-6-BLOW-PP
(B)	894433-1650		9503-		1	O	O	D=430-6-SUCT-PP
19	WASHER; PL, FAN DRIVE							
	909160-5080		9805-		4		J M	
	909164-7060		9805-		4		O	
28	BOLT; COOLING FAN							
	894205-9861		9503-		4	AB DE	Q S	M8X65
	028090-6700		9805-		4		C	M8X65
	050040-8500		9503-		4	C FGHI LM O		M8X50 W/LK WASHER
	050040-8000		9503-		4	N		M8X100 W/LK WASHER
	050140-8350		9503-		4	P		M8X35 W/WASHER
	894205-9881		9503-		4	RS		M8X95
	050040-8600		9503-		4	T	K R	M8X60 W/LK WASHER
	050040-8300		9503-		4		Z	M8X30 W/LK WASHER
	050040-8450		9711-		4		Z BCDEFG	M8X45 W/LK WASHER
	050040-6450		9806-		4		P	M8X45 W/LK WASHER
	050040-8450		9503-		4	H	A HI LMNO	M8X45 W/LK WASHER
	509000-0841		9711-		4		A LM	M8X45 W/LK WASHER
	894205-9871		9503-		4		B	M8X75
	050040-8350		9503-		4		C I	M8X35 W/LK WASHER
	509000-0841		9503-		4		D G	M8X55 W/LK WASHER
	050140-8500		9503-		4		EF H N	M8X50 W/WASHER
36	BELT; COOLING FAN							
	113671-2080		9806-		1		K	1-PIECE, L=1041
	894256-8000		9503-		1	A D FGHIJKLM OP U	ZABC EFG MN PQ T	1-PIECE, L=1041
	894407-6240		9503-9612		1	B E	D	1-PIECE, L=1060
	894161-8410		9701-		1	B E	D IJ L O T	1-PIECE, L=1051
	894129-3870		9503-		1	C	R	1-PIECE, L=1066
	513671-1000		9503-		1	N RS		1-PIECE, L=1130
	113671-2170		9503-		1	T		1-PIECE, L=1110
	113671-0110		9503-		1	W	H S	1-PIECE, L=1080
38	SPACER; FAN							
	913642-0780		9503-		1	ABCDEFGHIJ LM O V	A DEF H LMN Q ST	
	989136-4230		9503-		1	AB DE P RSTU	Z C I K QRST	
	513642-0550		9709-		1		T	
	913642-0790		9503-		1	N RS	B	
	913642-0761		9503-		1	N	D G L	
	913642-0770		9503-		1	T	JK OP R	
66	BOLT; PULLEY							
	050040-8160		9805-		4		F N	

0-33 B FAN AND FAN BELT

FIG-NO.

KEY NO	PART NAME / PART NUMBER	ITC	APPLIED DATE	LR	QTY	4JB1 (A B C D E F G H I J K L M N O P Q R S T U V W X Y)	A-4JB1 (Z A B C D E F G H I J K L M N O P Q R S T U V W X)	Remarks
71	BOLT; ADJ PLATE, GEN							
	050040-8220	A	9503-9804		1	AB DEFG IJKLM OP W	ZABCDEFG Q S	M8X22 W/LK WASHER
	028080-8200		9805-		1	AB DEFGHIJKLM OP W	ZABCDEFGHIJ LMNOPQ ST	M8X22
	050040-8280	A	9503-9804		2	C	R	M8X28 W/LK WASHER
	028680-8300		9805-		2	C	K R	M8X28
	050040-8220	A	9503-9804		2	N RST		M8X22 W/LK WASHER
	028080-8200		9805-		2	N RST		M8X22
73	BOLT; GEN TO ADJ PLATE							
	028680-8250		9503-		1	U		M8X25 W/LK WASHER
80	PLATE; ADJ							
(A)	894423-7460		9503-		1	AB DEFGHIJK M OP	ZABCDEFGH L N PQ S	
(A)	894327-3131		9503-		1	L U		
(A)	894149-3580		9503-		1		K	
(A)	894431-5610		9503-		1	W	I	
(A)	897080-7730		9503-		1		R	
(B)	897080-7730		9503-		1	C		
(C)	897184-2640		9806-		1		J M O T	
(B)	894338-1930		9503-		1	N RST		
81	PIECE; SLIDING							
	897086-2281		9806-		1		T	
82	NUT; ADJ PLATE							
	909110-5080		9806-		1		T	
94	WASHER; LK, ADJ PLATE							
	909150-5080		9806-		1		T	
96	BOLT; ADJ PLATE							
(A)	050040-8220		9503-		1	ABCDEFGHIJ LMNOP RSTU	Z BCDEFGHI KL N PQRS	M8X22 W/LK WASHER
(B)	894388-1780		9806-		1		T	M8X22 W/LK WASHER
(A)	050040-8350		9503-		1		A G O S	M8X35 W/LK WASHER
(B)	894388-1780		9806-		1		T	
175	WASHER; PL, ADJ PLATE							
	909164-7080		9503-		1	ABCDEFGHIJ LMNOP RST	ZABCDEFGHIJKLMNOPQRST	ID=8 OD=22
249	WASHER; COOLING FAN							
	897181-6161		9805-		1		M	

MEMO

0-35	ENGINE CONTROL VALVE AND LEVER
FIG-NO.	

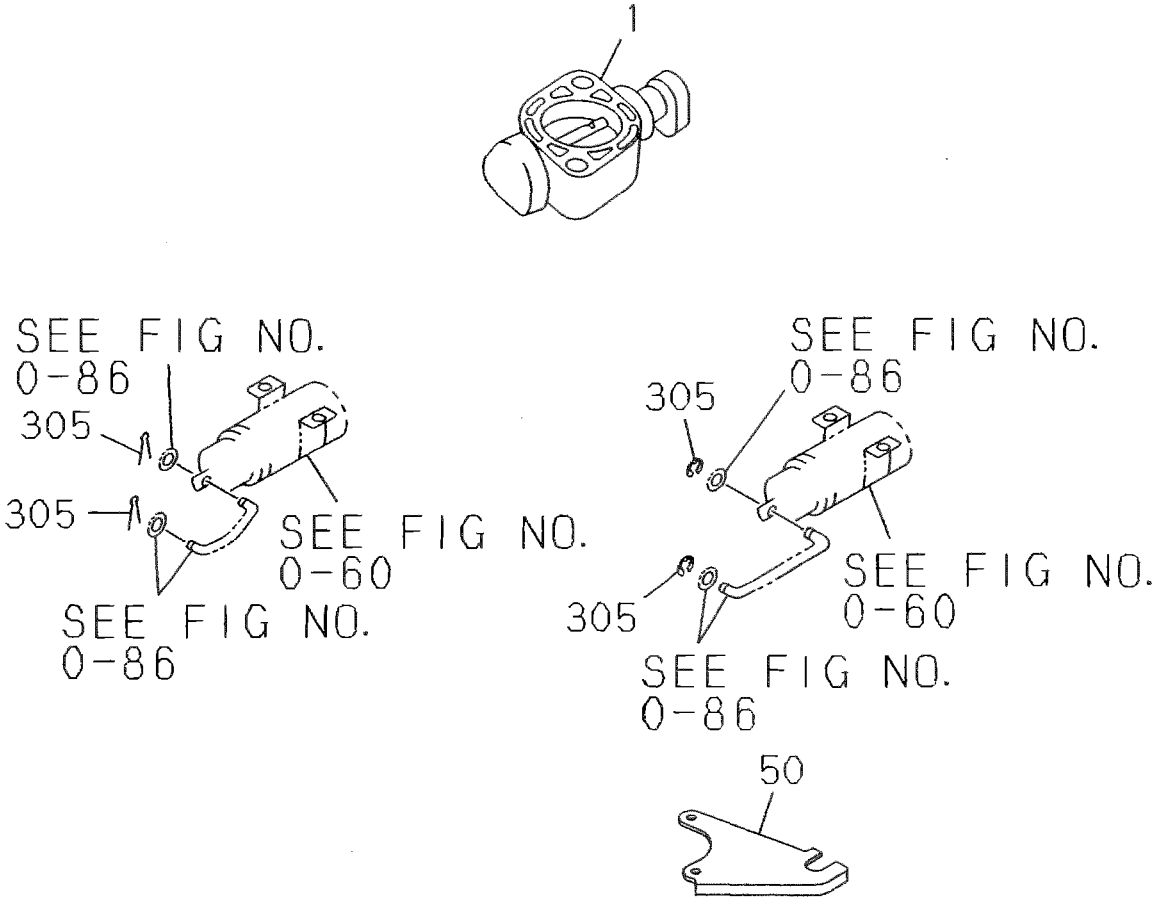

035A0150796

ENGINE CONTROL VALVE AND LEVER

0-35 A

FIG-NO.

KEY. NO	PART NAME / PART NUMBER	ITC	APPLIED DATE	LR	QTY	4JB1: PA, PA01, PA02, PA03, PA04 (A B C D E)	PA05, PA06, PA08, PA09, PA12 (F G H I J)	PA13, PA13UG, PA14, PA15, PA16 (K L M N O)	PA17, PA18, PA19, PA20, PA21 (P Q R S T)	PA22, PB, PB02, PB03 (U V W X Y)	PD, PD01, PF, PH, PK (Z A B C D)	PK01, PK02, PK03, PK04, PL (E F G H I)	PKL01, PL, PLUG, PL01, PL01UG (J K L M N)	PL02, PL02UF, PN, PN01, PN01UG (O P Q R S)	(T U V W X)	Remarks
1	SHUTTER ASM; INT															
	894450-3880		9503-		1	E	H I	K L	P					O P		
305	RING; SNAP, LINK ROD															
	909185-4040		9503-		2	D E	F I	K L M	P Q R S T	U W X	Z A B		M N			ID=4
	909185-4040		9407-		2		G									ID=4

0-35 B ENGINE CONTROL VALVE AND LEVER

FIG-NO.

KEY. NO	PART NAME / PART NUMBER	ITC	APPLIED DATE	LR	QTY	4JB1 (ABCDEFGHIJKLMNOPQRSTUVWXY)	A-4JB1 (ZABCDEFGHIJKLMNOPQRSTUVWX)	Remarks
1	SHUTTER; INT							
	894450-3880		9503-		1		C J	
50	BRACKET; ENG CONT CABLE							
	894428-8050		9503-		1		F I N O	
305	RING; SNAP, LINK ROD							
	909185-4040		9503-		2	J M N O P	Z A D E G H I J L M O	ID=4

MEMO

0-36	TURBOCHARGER SYSTEM
FIG-NO.	

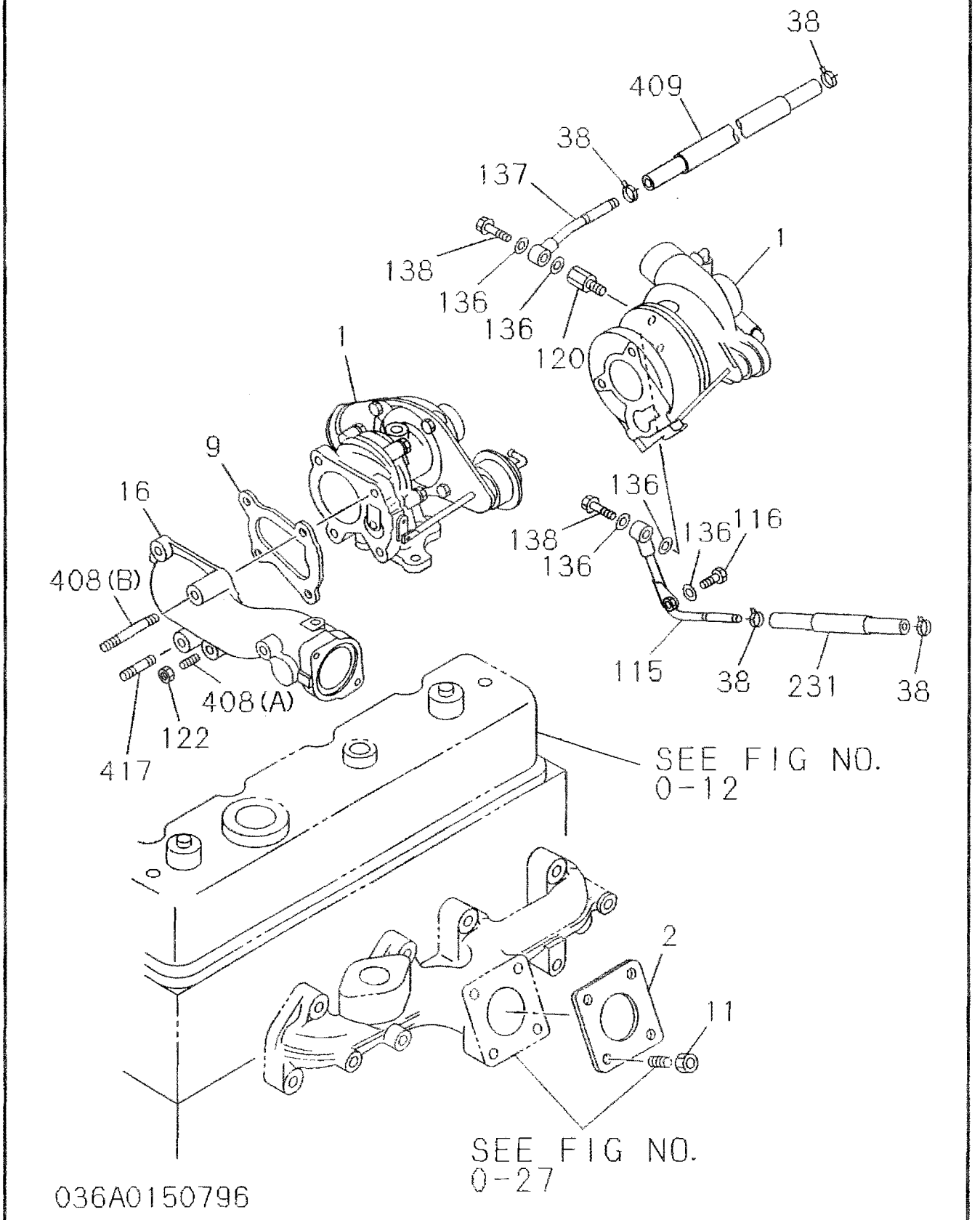

TURBOCHARGER SYSTEM

FIG-NO. **0-36 B**

KEY NO / PART NAME

Model codes: 4JB1 (columns A–Y), A-4JB1 (columns Z–X)

KEY NO	PART NUMBER	ITC	APPLIED DATE	LR	QTY	APPLICATION	Remarks
1	TURBOCHARGER ASM					—SEE FIG-NO 0-37 FOR COMPONENT	
	894343-2920		9503-		1	R S T	
	897200-4340		9801-		1	U V	
	897017-7770		9503-		1	W	
2	GASKET; TURBOCHARGER TO EXH MANIF						
	894433-6050		9503-		1	R S T U V W	
9	GASKET; TURBOCHARGER TO EXH DUCT						
	894433-6040		9503-		1	R S T U V W	
11	NUT; TURBOCHARGER						
	894170-4860		9503-		4	R S T U V W	M8 FLANGE
16	ADAPTER; EXH PIPE						
	894449-9741	A	9503-9704		1	W	
	897118-6280		9705-		1	W	
38	CLIP; RUBBER HOSE						
	894221-5190		9503-		4	W	ID=15.5
115	PIPE; WATER, TURBOCHARGER OUT						
	894472-5852		9503-		1	W	
116	BOLT; WATER PIPE						
	050040-6120		9503-		1	W	M6X12 W/LK WASHER
120	ADAPTER; WATER						
	894472-5830		9503-		1	W	
122	NUT; ADAPTER						
	894170-4860		9503-		4	R S T W	M8 FLANGE
136	GASKET; WATER PIPE						
	909571-4120		9503-		4	W	T=1.0
	894472-5841		9503-		1	W	T=2.0
137	PIPE; WATER, TURBOCHARGER IN						
	894366-0330		9503-		1	W	
138	BOLT; EYE, WATER PIPE						
	109675-0810		9503-		2	W	M12X24
231	HOSE; RUBBER, TURBOCHARGER OUT						
	894325-2550		9503-		1	W	L=160 W/INSULATOR
408	STUD; TURBOCHARGER TO ADAPTER						
(A)	894257-3190		9503-		3	R S	M8X22 L=33
(A)	904130-8500		9711-		3	U V	M8X22 L=33
(A)	894257-3190		9503-		2	T	M8X22 L=33
(A)	894105-1621		9503-		2	W	M8X45 L=57
(B)	894362-0470		9503-		1	R S	M9X105 L=116
(B)	894156-9390		9503-		2	T	M8X87

0-36 B TURBOCHARGER SYSTEM

FIG-NO.

KEY NO	PART NAME	PART NUMBER	ITC	APPLIED DATE	LR	QTY	4JB1	A-4JB1	Remarks
							PPPPPPPPPPPPPPPPPPPPTTTTPPPPPPPPPPPPPPPPPPPP YYYYYVVVWWWWWWWWWTTPPPAAAAAAAAAAAAAAAAAYYY 0000 00 0000000000QQBKKXAAAAAAAAAAAAAAAAWAAA 1234 12 2346789 0 0 0000000000111111 10 000 1 1 1234567890123451 123 ABCDEFGHIJKLMNOPQRSTUVWXYZABCDEFGHIJKLMNOPQRSTUVWX	
408	STUD: TURBOCHARGER TO ADAPTER								
(B)		894150-3520		9503-		2	W		M8X64 L=76
409	HOSE: RUBBER, TURBOCHAGER IN								
		894340-6691		9503-		1	W		L=250 W/INSULATOR
417	STUD: ADAPTER TO EXH PIPE								
		509302-0070		9503-		2	W		M10X38 L=53

MEMO

0-37	TURBOCHARGER
FIG-NO.	

ASM
8-94343-292-*
8-97017-777-*

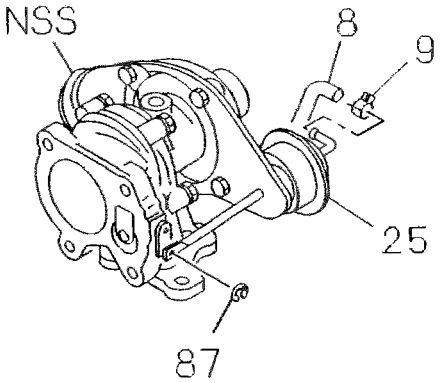

037A0150796

TURBOCHARGER

0-37
FIG-NO.

KEY. NO	PART NAME	PART NUMBER	ITC	APPLIED DATE	LR	QTY	88 99 47 30 41 37 27 97 27 00 ABCDEFGHIJKLMNOPQRSTUVWXYZABCDEFGHIJKLMNOPQRSTUVWX	Remarks
8	HOSE; ACTUATOR TO BLOWER HSG. TC	894386-8400		9503-		1	AB	
9	CLIP; ACTUATOR HOSE. TURBOCHARGER	509707-0570		9503-		2	AB	
25	ACTUATOR; TURBOCHARGER	894386-8390		9503-		1	A	
		897020-9801		9503-		1	B	
87	RING; ACTUATOR. TURBOCHARGER	509588-0370		9503-		1	AB	

0-40	FUEL INJECTION SYSTEM
FIG-NO.	(NO.1)

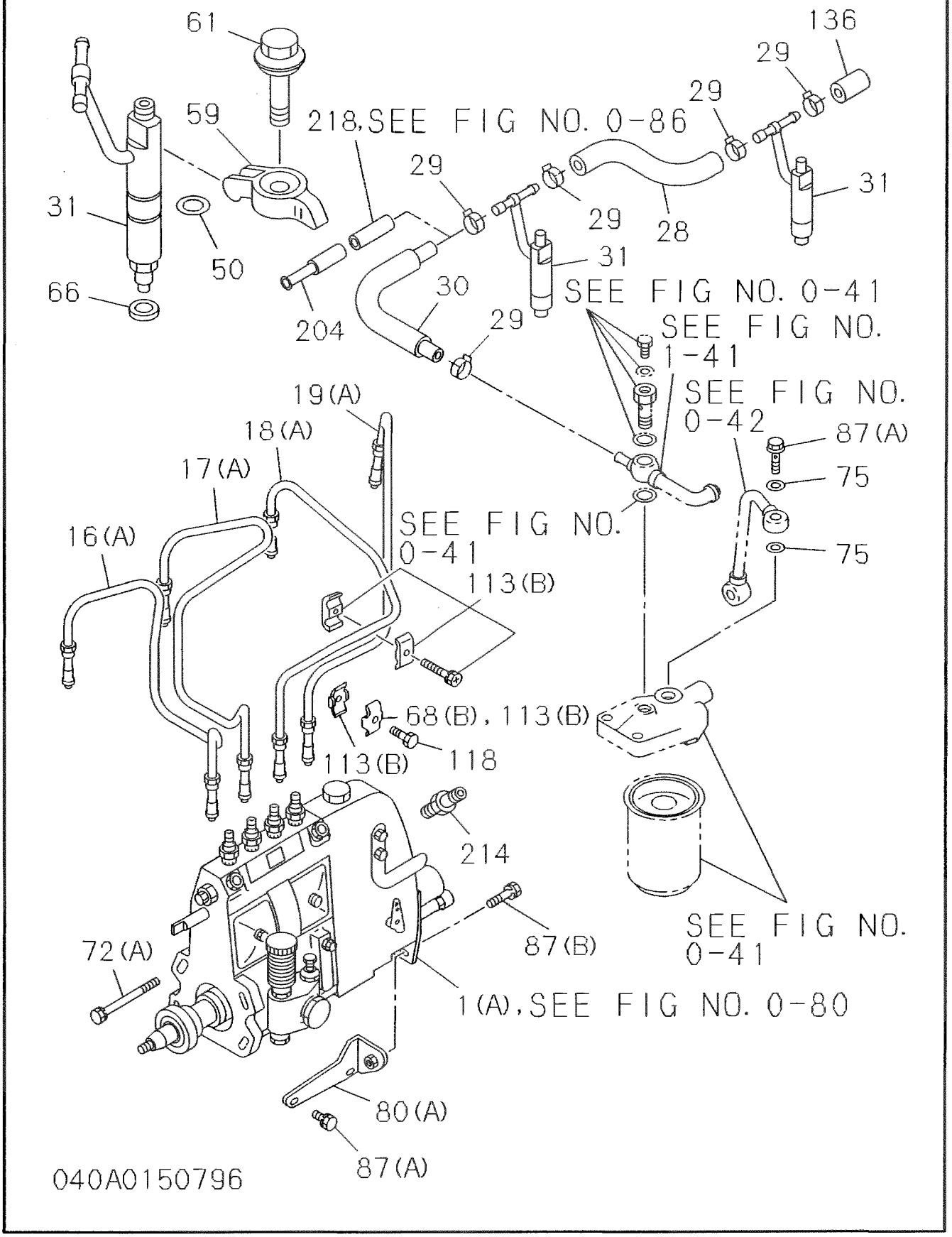

FUEL INJECTION SYSTEM

(NO.2)

0-40

FIG-NO.

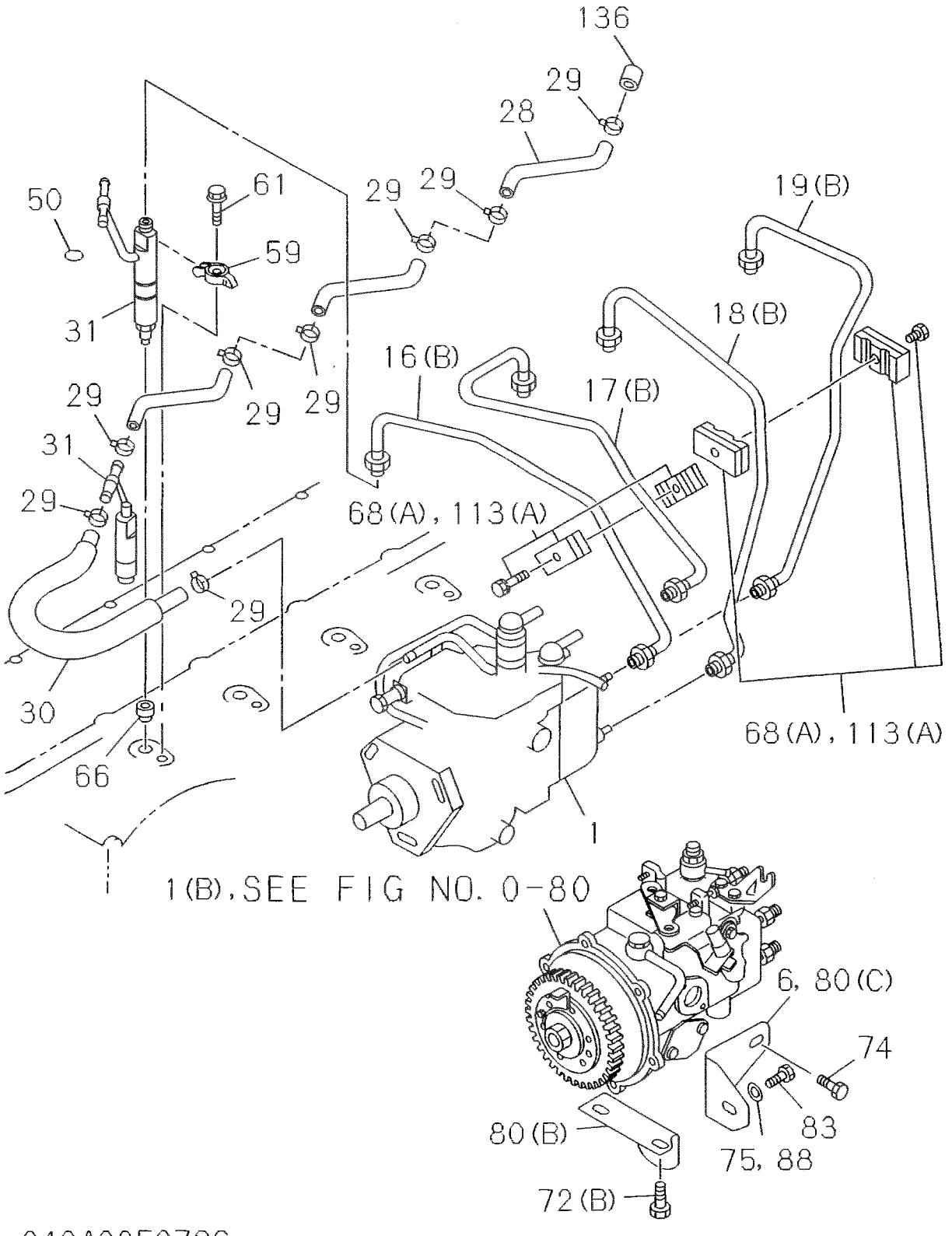

040A0250796

0-40	FUEL INJECTION SYSTEM
FIG-NO.	(NO.3)

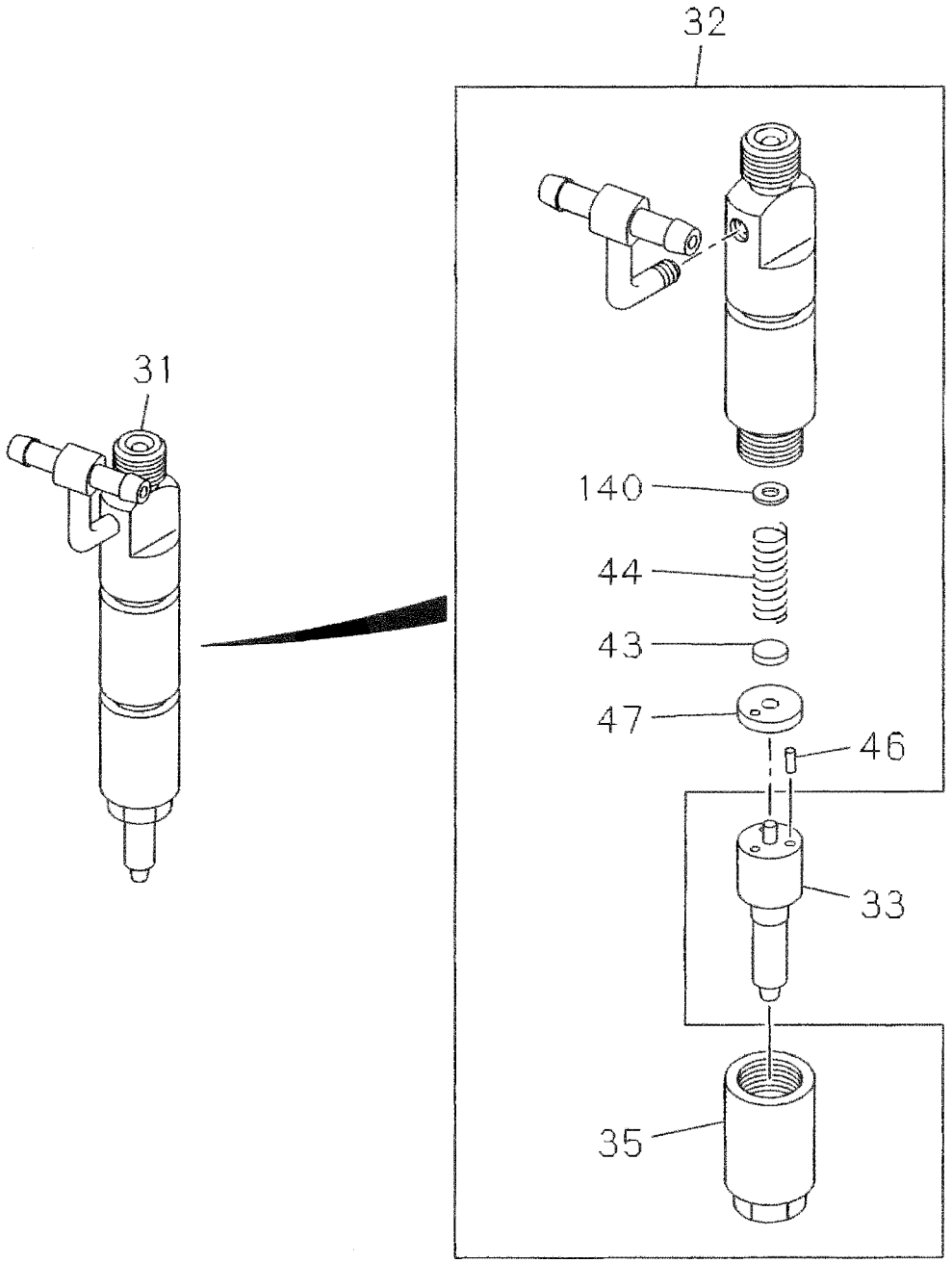

040A0350796

FUEL INJECTION SYSTEM

0-40 A FIG-NO.

KEY NO	PART NUMBER	ITC	APPLIED DATE	LR	QTY	Applicable models (4JB1)	Remarks
1	PUMP ASM; INJ					—SEE FIG-NO 0-80 – 0-85 FOR COMPONENT	
(A)	894428-8042		9503-		1	A	
(A)	894441-9431		9503-		1	B	
(A)	894360-7061		9503-		1	C	
(A)	894446-7751		9503-		1	D	
(A)	894449-2211		9503-		1	E I	
(A)	894462-7554		9503-		1	F KL	
(A)	894441-9431	A	9406-9412		1	G	
(A)	897104-5092		9501-		1	G T	
(A)	894388-1970		9503-		1	H	
(A)	897100-2651		9503-		1	J NO	
(A)	897027-0601		9503-		1	M	
(A)	897049-1920		9503-		1	P	
(A)	894381-1481		9503-		1	Q S	
(A)	897068-5510		9503-		1	R	
(A)	897137-8320		9503-		1	U	
(A)	894476-1841		9503-		1	V	
(A)	894360-3062		9503-		1	W	
(A)	897029-9490		9503-		1	X	
(A)	897042-0820		9503-		1	Z	
(A)	897108-9220		9503-		1	A	
(A)	897043-5251		9503-		1	B	
(A)	894342-9343		9503-		1	C	
(A)	897014-4201		9503-		1	KL	
(A)	894373-2092		9503-		1	MN	
(A)	897015-5790		9503-		1	OP	
(B)	894404-0322		9503-		1	D	
(B)	894335-7072		9503-		1	E	
(B)	894341-3080	A	9503-9511		1	F	
(B)	897020-3902	C	9512-9712		1	F	
(B)	897190-3750		9801-		1	F	
(B)	897020-3902		9503-		1	G	
(B)	897039-6571		9503-		1	IJ	
(B)	894465-9290		9503-		1	QRS	
(B)	897191-2800		9711-		1	H	
16	PIPE; INJ NO 1						
(A)	894423-7491		9503-		1	ABC H J NO BC	
(A)	897017-7871		9503-		1	DE I KLM PQ ST UVWX KLMN	
(A)	894425-4141		9503-		1	F ZA OP	
(A)	894423-7491		9406-9406		1	G	
(A)	897017-7871		9407-		1	G	
(A)	897017-7911		9503-		1	R	
(B)	894133-7455		9503-		1	DE IJ QRS	
(B)	894133-7455		9606-9801		1	F	
(B)	897192-4450		9802-		1	F H	
(B)	897017-7831		9503-		1	G	
17	PIPE; INJ NO 2						
(A)	894423-7501		9503-		1	ABC H J NO BC	
(A)	897017-7881		9503-		1	DE I KLM PQ ST UVWX KLMN	
(A)	894425-4151		9503-		1	F ZA OP	
(A)	897017-7881		9407-		1	G	

0-40 A FUEL INJECTION SYSTEM

FIG-NO.

KEY. NO — PART NAME

4JB1

KEY NO	PART NUMBER	ITC	APPLIED DATE	LR	QTY	ABCDE	FGHIJ	KLMNO	PQRST	UVWXY	ZABCD	EFGHI	JKLMN	OPQRS	TUVWX	Remarks
17	PIPE: INJ NO 2															
(A)	897017-7921		9503-		1				R							
(B)	897192-4460		9802-		1							F H				
(B)	894139-1135		9605-		1						D	E I	J	QRS		
(B)	894139-1135		9605-9801		1							F				
(B)	897017-7842		9503-		1							G				
18	PIPE: INJ NO 3															
(A)	894423-7511		9503-		1	ABC	H J	NO			BC					
(A)	897017-7891		9503-		1	DE	I	KLM	PQ ST	UVWX			KLMN			
(A)	894425-4161		9503-		1		F				ZA			OP		
(A)	894423-7511		9406-9406		1		G									
(A)	897017-7891		9407-		1		G									
(A)	897017-7931		9503-		1				R							
(B)	894139-1145		9605-		1						D	E I	J	QRS		
(B)	894139-1145		9605-9801		1							F				
(B)	897129-4470		9802-		1							F H				
(B)	897017-7852		9503-		1							G				
19	PIPE: INJ NO 4															
(A)	894423-7521		9503-		1	ABC	H J	NO			BC					
(A)	897017-7901		9503-		1	DE	I	KLM	PQ ST	UVWX			KLMN			
(A)	894425-4171		9503-		1		F				ZA			OP		
(A)	897017-7901		9406-		1		G									
(A)	897017-7941		9503-		1				R							
(B)	894133-7515		9603-		1						D	E I	J	QRS		
(B)	894133-7515		9503-9801		1							F				
(B)	897129-4480		9802-		1							F H				
(B)	897017-7861		9503-		1							G				
28	HOSE: FUEL, NOZZLE TO NOZZLE															
	894152-3530		9503-		3	ABCDE	FGHIJ	KLMNO	PQRST	UVWX	ZABCD	EFGHI	JKLMN	OPQRS		
29	CLIP: HOSE, LEAK OFF PIPE															
	894238-6100		9503-		9	ABCDE	FGHIJ	KLMNO	PQRST	UVWX	ZABCD	EFGHI	JKLMN	OPQRS		ID=12
30	HOSE: RUBBER, FUEL LEAK															
	894427-5012		9503-		1	ABCDE	FGHIJ	KLMNO	PQRST	UV	ZABCD	EFGHI	JKLMN	OPQRS		L=320 W/INSULATOR
	894152-9892		9503-		1					WX						L=240
31	NOZZLE ASM; INJ															
	894122-2625		9503-		4	ABCDE	F HI	KL	PQ S	UV	ZA		KLMN	OP		
	894442-2241		9503-		4		G J	MNO	R T	WX	BC					
	894407-8793	C	9503-9712		4							F				
	897134-5240		9801-		4							F H				
	894407-8793		9503-		4						D	E G				
	894407-9502		9503-		4							I	J			
	894122-2605		9503-		4									QRS		
32	HOLDER ASM; NOZZLE															
	894122-2633		9503-		4	ABCDE	F HI	KL	PQ S	UV	ZA		KLMN	OP		
	894139-4652		9503-		4									QRS		
	894372-1950		9503-		4						D	E G I	J			

FUEL INJECTION SYSTEM

0-40 A

FIG-NO.

KEY. NO	PART NAME	PART NUMBER	I T C	APPLIED DATE	L R	Q T Y	4JB1 PPPPP AAAAA 0000 1234	PPPPP AAAAA 00001 56892	PPPPP AAAAA 11111 33456 U G	PPPPP AAAAA 11122 78901	PPPP ABBB 2 00 2 23	PPPP DDFHK 0 1	PPPPP KKKKK 0000L 1234	PPPPP KLLLL L U00 0 G11 1 U G	PPPPP LLNNN 00 00 22 11 U U F G	Remarks
							ABCDE	FGHIJ	KLMNO	PQRST	UVWXY	ZABCD	EFGHI	JKLMN	OPQRS TUVWX	
32	HOLDER ASM; NOZZLE															
		894372-1950		9503-9712		4							F			
		894442-2250		9801-		4							F H			
		894442-2250		9503-		4		G J	MNO	R T	WX	BC				
33	NOZZLE; INJ															
		894122-2642		9503-		4	ABCDE	F HI	KL	PQ S	UV	ZA		KLMN	OP	
		897134-5250		9801-		4							F H			
		894247-9372		9503-9712		4							F			
		894247-9372		9503-		4						D	E G		QRS	
		894407-9512		9503-		4							I	J		
		894442-4020		9503-		4		G J	MNO	R T	WX	BC				
35	NUT; NOZZLE RET. NOZZLE HOLDER															
		894174-1840		9503-		4	ABCDE	FGHIJ	KLMNO	PQRST	UVWX	ZABCD	EFGHI	JKLMN	OPQRS	
43	SEAT; NOZZLE SPRING, NOZZLE HOLDER															
		894174-1400		9503-		4	ABCDE	F HI	KL	PQ S	UV	ZA D	E G I	JKLMN	OPQRS	
		894174-1400		9503-9712		4							F			
		894312-7230		9801-		4							F H			
		894312-7230		9503-		4	ABCDE	FGHIJ	KLMNO	PQRST	UVWX	ZABC		KLMN	OP	
44	SPRING; NOZZLE, NOZZLE HOLDER															
		894174-1410		9503-		4	ABCDE	FGHIJ	KLMNO	PQRST	UVWX	ZABCD	EFGHI	JKLMN	OPQRS	
46	PIN; NOZZLE SET, NOZZLE HOLDER															
		894174-1390		9503-		8	ABCDE	FGHIJ	KLMNO	PQRST	UVWX	ZABCD	EFGHI	JKLMN	OPQRS	
47	SPACER; NOZZLE SPRING, NOZZLE HOLDER															
		894174-1830		9503-		4	ABCDE	FGHIJ	KLMNO	PQRST	UVWX	ZABCD	EFGHI	JKLMN	OPQRS	
50	GASKET; NOZZLE HOLDER										--ALSO INCLUDED IN GASKET SET(ENGINE)					
		894326-4390		9503-		4	ABCDE	FGHIJ	KLMNO	PQRST	UVWX	ZABCD	EFGHI	JKLMN	OPQRS	
59	CLAMP; NOZZLE HOLDER															
		894433-4270		9503-		4	ABCDE	FGHIJ	KLMNO	PQRST	UVWX	ZABCD	EFGHI	JKLMN	OPQRS	
61	BOLT; CLAMP NOZZLE HOLDER															
		894433-7171		9503-		4	ABCDE	FGHIJ	KLMNO	PQRST	UVWX	ZABCD	EFGHI	JKLMN	OPQRS	
66	GASKET; INJ NOZZLE										--ALSO INCLUDED IN GASKET SET(ENGINE)					
		894125-8591	A	9503-9703		4	ABCDE	FGHIJ	KLMNO	PQRST	UVWX	ZABCD	EFG I	JKLMN	OPQRS	ID=7.2 OD=15.0 T=6.6
		897171-3310		9704-		4	ABCDE	FGHIJ	KLMNO	PQRST	UVWX	ZABCD	EFGHI	JKLMN	OPQRS	
72	BOLT; BRKT TO INJ PUMP															
(A)		050040-8600	A	9503-9804		4					VWX			KLMN	OP	M8X60 W/LK WASHER
(A)		028080-8600		9805-		4					VWX			KLMN	OP	M8X60
(A)		050040-8250	A	9503-9804		1					VWX	B		KLMN	OP	M8X25 W/LK WASHER
(A)		028080-8250		9805-		1					VWX	B		KLMN	OP	M8X25
(A)		050040-8000		9503-		1					V					M8X100 W/LK WASHER
(A)		509030-0131	A	9503-9804		1					WX	B		KLMN	OP	M8X75
(A)		028080-8700		9805-		1					WX	B		KLMN	OP	M8X75
(A)		894205-9861	A	9503-9804		6						ZA				M8X65

0-40 A FUEL INJECTION SYSTEM

FIG-NO.

KEY NO	PART NAME / PART NUMBER	ITC	APPLIED DATE	LR	QTY	4JB1 ABCDE (PA0001–PA0004)	FGHIJ (PA0005, PA0006, PA0008, PA0009, PA0012)	KLMNO (PA0013, PA0013UG, PA0014–PA0016)	PQRST (PA0017–PA0022)	UVWXY (PA0022, PB, PB0002, PB0003)	ZABCD (PD, PD0001, PF, PH, PK)	EFGHI (PK0001–PK0004, PKL)	JKLMN (PKL001, PL, PLU, PL0G1UG, PL011)	OPQRS (PL022, PL02UF, PN, PN01, PN01UG)	TUVWX	Remarks
72	BOLT: BRKT TO INJ PUMP															
(A)	028080-8600		9805-		6						ZA					M8X65
(B)	050051-0200	A	9503-9804		2									QRS		M10X20 W/LK WASHER
(B)	028781-0200		9805-		2									QRS		M10X20
74	BOLT: BRKT TO BODY															
	050140-8220	A	9503-9804		2									QRS		M8X22 W/WASHER
	028680-8200		9805-		2									QRS		M8X22
80	BRACKET: PUMP															
(A)	894152-9051		9503-		1	ABCDE	FGHIJ	KLMNO	PQRST	UVWX	ZABC		KLMN	OP		
(B)	894133-7611		9503-		1									QRS		
(C)	894133-7622		9503-		1									QRS		
83	BOLT: BRKT TO BRKT															
	050040-8250		9503-		2									QRS		M8X25 W/LK WASHER
87	BOLT: PUMP															
(A)	050040-8200		9503-		2	ABCDE	FGHIJ	KLMNO	PQRST	UVWX	ZABC		KLMN	OP		M8X20 W/LK WASHER
(B)	050141-0250		9503-		1	ABCDE	FGHIJ	KLMNO	PQRST	UVWX	ZABC		KLMN	OP		M10X25 W/WASHER
88	WASHER: PL, PUMP & RR BRKT FIX															
	909164-7080		9503-		2									QRS		ID=8 OD=22
113	CLIP: INJ PIPE															
(A)	515419-0131		9503-		2						D	EFGHI	J	QRS		
(B)	915419-0721		9503-		3	ABCDE	FGHIJ	KLMNO	PQRST	UVWX	ZABC	I	JKLMN	OPQRS		
(B)	894430-0000		9503-		1	ABCDE	FGHIJ	KLMNO	PQRST	UVWX	ZABC		KLMN	OP		
(B)	894430-0010		9503-		1	ABCDE	FGHIJ	KLMNO	PQRST	UVWX	ZABC		KLMN	OP		
118	BOLT: CLIP, INJ PIPE															
	050140-8180		9503-		1	ABCDE	FGHIJ	KLMNO	PQRST	UVWX	ZABC		KLMN	OP		M8X18 W/WASHER
136	CAP: NOZZLE, FUEL END															
	894473-9670		9503-		1	ABCDE	FGHIJ	KLMNO	PQRST	UVWX	ZABCD	EFGHI	JKLMN	OPQRS		
140	SHIM: NOZZLE SPRING, NOZZLE HOLDER															
	894174-1420		9503-		AR		G J	MNO	R T	WX	BCD	EFGHI	J	QRS		T=0.500
	894174-1430		9503-		AR		G J	MNO	R T	WX	BCD	EFGHI	J	QRS		T=0.525
	894174-1440		9503-		AR		G J	MNO	R T	WX	BCD	EFGHI	J	QRS		T=0.550
	894174-1450		9503-		AR		G J	MNO	R T	WX	BCD	EFGHI	J	QRS		T=0.575
	894174-1460		9503-		AR		G J	MNO	R T	WX	BCD	EFGHI	J	QRS		T=0.600
	894174-1470		9503-		AR		G J	MNO	R T	WX	BCD	EFGHI	J	QRS		T=0.625
	894174-1480		9503-		AR		G J	MNO	R T	WX	BCD	EFGHI	J	QRS		T=0.650
	894174-1490		9503-		AR		G J	MNO	R T	WX	BCD	EFGHI	J	QRS		T=0.675
	894174-1500		9503-		AR		G J	MNO	R T	WX	BCD	EFGHI	J	QRS		T=0.700
	894174-1510		9503-		AR		G J	MNO	R T	WX	BCD	EFGHI	J	QRS		T=0.725
	894174-1520		9503-		AR		G J	MNO	R T	WX	BCD	EFGHI	J	QRS		T=0.750
	894174-1530		9503-		AR		G J	MNO	R T	WX	BCD	EFGHI	J	QRS		T=0.775
	894174-1540		9503-		AR		G J	MNO	R T	WX	BCD	EFGHI	J	QRS		T=0.800
	894174-1550		9503-		AR		G J	MNO	R T	WX	BCD	EFGHI	J	QRS		T=0.825
	894174-1560		9503-		AR		G J	MNO	R T	WX	BCD	EFGHI	J	QRS		T=0.850
	894174-1570		9503-		AR		G J	MNO	R T	WX	BCD	EFGHI	J	QRS		T=0.875

FUEL INJECTION SYSTEM

0-40 A

FIG-NO.

4JB1

KEY NO	PART NAME / PART NUMBER	ITC	APPLIED DATE	LR	QTY	ABCDE	FGHIJ	KLMNO	PQRST	UVWXY	ZABCD	EFGHI	JKLMN	OPQRS	TUVWX	Remarks
140	SHIM: NOZZLE SPRING, NOZZLE HOLDER															
	894174-1580		9503-		AR		G J	M N O	R T	W X	B C D	E F G H I	J	Q R S		T=0. 900
	894174-1590		9503-		AR		G J	M N O	R T	W X	B C D	E F G H I	J	Q R S		T=0. 925
	894174-1600		9503-		AR		G J	M N O	R T	W X	B C D	E F G H I	J	Q R S		T=0. 950
	894174-1610		9503-		AR		G J	M N O	R T	W X	B C D	E F G H I	J	Q R S		T=0. 975
	894174-1620		9503-		AR		G J	M N O	R T	W X	B C D	E F G H I	J	Q R S		T=1. 000
	894174-1630		9503-		AR		G J	M N O	R T	W X	B C D	E F G H I	J	Q R S		T=1. 025
	894174-1640		9503-		AR		G J	M N O	R T	W X	B C D	E F G H I	J	Q R S		T=1. 050
	894174-1650		9503-		AR		G J	M N O	R T	W X	B C D	E F G H I	J	Q R S		T=1. 075
	894174-1660		9503-		AR		G J	M N O	R T	W X	B C D	E F G H I	J	Q R S		T=1. 100
	894174-1670		9503-		AR		G J	M N O	R T	W X	B C D	E F G H I	J	Q R S		T=1. 125
	894174-1680		9503-		AR		G J	M N O	R T	W X	B C D	E F G H I	J	Q R S		T=1. 150
	894174-1690		9503-		AR		G J	M N O	R T	W X	B C D	E F G H I	J	Q R S		T=1. 175
	894174-1700		9503-		AR		G J	M N O	R T	W X	B C D	E F G H I	J	Q R S		T=1. 200
	894174-1710		9503-		AR		G J	M N O	R T	W X	B C D	E F G H I	J	Q R S		T=1. 225
	894174-1720		9503-		AR		G J	M N O	R T	W X	B C D	E F G H I	J	Q R S		T=1. 250
	894174-1730		9503-		AR		G J	M N O	R T	W X	B C D	E F G H I	J	Q R S		T=1. 275
	894174-1740		9503-		AR		G J	M N O	R T	W X	B C D	E F G H I	J	Q R S		T=1. 300
	894174-1750		9503-		AR		G J	M N O	R T	W X	B C D	E F G H I	J	Q R S		T=1. 325
	894174-1760		9503-		AR		G J	M N O	R T	W X	B C D	E F G H I	J	Q R S		T=1. 350
	894174-1770		9503-		AR		G J	M N O	R T	W X	B C D	E F G H I	J	Q R S		T=1. 375
	894174-1780		9503-		AR		G J	M N O	R T	W X	B C D	E F G H I	J	Q R S		T=1. 400
	894174-1790		9503-		AR		G J	M N O	R T	W X	B C D	E F G H I	J	Q R S		T=1. 425
	894174-1800		9503-		AR		G J	M N O	R T	W X	B C D	E F G H I	J	Q R S		T=1. 450
	894174-1810		9503-		AR		G J	M N O	R T	W X	B C D	E F G H I	J	Q R S		T=1. 475
	894174-1820		9503-		AR		G J	M N O	R T	W X	B C D	E F G H I	J	Q R S		T=1. 500
204	ADAPTER: FUEL RETURN															
	894178-1540		9503-		1					V						
214	ORIFICE: INJ PUMP															
	897011-6871		9503-		1			M	R S		B					
218	HOSE: FUEL, ADAPTER TO NOZZLE															
	001206-0500		9503-		1					V						L=50

0-40 B FUEL INJECTION SYSTEM

FIG-NO.

Model columns:

4JB1	A	B	C	D	E	F	G	H	I	J	K	L	M	N	O	P	Q	R	S	T	U	V	W	X	Y
Model	PY	PY0 1	PY0 2	PY0 3	PY0 4	PV	PV0 1	PV0 2	PW	PW0 2	PW0 3	PW0 4	PW0 6	PW0 7	PW0 8	PW0 9		PT0	PT0 01	TPB	TPK	TPK0 1	TPX		

A-4JB1	Z	A	B	C	D	E	F	G	H	I	J	K	L	M	N	O	P	Q	R	S	T	U	V	W	X
Model	PAA	PAA01	PAA02	PAA03	PAA04	PAA05	PAA06	PAA07	PAA08	PAA09	PAA10	PAA11	PAA12	PAA13	PAA14	PAA15	PAW1	PYA0	PYA01	PYA02	PYA03				

KEY. NO	PART NAME / PART NUMBER	I T C	APPLIED DATE	L R	QTY	4JB1	A-4JB1	Remarks
1	PUMP ASM; INJ						--SEE FIG-NO 0-80 – 0-85 FOR COMPONENT.	
(A)	897020-7570		9503-		1	A B		
(A)	897081-5732		9503-		1	C		
(A)	897089-4271		9503-		1	D E		
(A)	897049-0260		9503-		1	F		
(A)	897048-7940		9503-		1	G H		
(A)	894381-1481		9503-		1	I J K O P		
(A)	897011-4790		9503-		1	L		
(A)	897061-5751		9503-		1	M		
(A)	897088-5990		9503-		1	N		
(A)	897134-8731		9503-		1		Z A D I L M	
(A)	897168-0740		9503-		1		B	
(A)	897186-6180		9710-		1		T	
(A)	897190-3740		9801-		1		C	
(A)	897176-2010		9503-		1		E G H O	
(A)	897176-2010	C	9503-9712		1		C	
(A)	897191-2780		9801-		1		P	
(A)	897134-8740	A	9503-9612		1		Q S	
(A)	897134-8741		9701-		1		Q S	
(A)	897191-5150		9801-		1		K	
(A)	897139-2240	A	9503-9511		1		R	
(A)	897139-2241		9512-		1		R	
(A)	897206-3600		9803-		1		N	
(A)	897191-2790		9805-		1		J	
(A)	897173-8820		9503-		1		F	
(B)	897011-6240		9503-		1	R		
(B)	894388-9600		9503-		1	S		
(B)	897032-2311		9503-		1	T		
(B)	897017-7760		9503-		1	W		
(B)	897190-3761		9806-		1	U V		
6	BRACKET; INJ PUMP TO C/BL							
	894438-0900		9503-		1	W		
16	PIPE; INJ NO 1							
(A)	897017-7871		9503-		1	A B C D E M	Z A B C D E F G H I J K L M N O P Q R S T	
(A)	897017-7911		9503-		1	F G H I K N O P		
(A)	894425-4141		9503-		1	J L		
(A)	897017-7780		9503-		1	W		
(B)	894370-1071		9503-		1	R S T		
(B)	897192-4450		9802-		1	U V		
17	PIPE; INJ NO 2							
(A)	897017-7881		9503-		1	A B C D E M	Z A B C D E F G H I J K L M N O P Q R S T	
(A)	897017-7921		9503-		1	F G H I K N O P		
(A)	894425-4151		9503-		1	J L		
(A)	897017-7790		9503-		1	W		
(B)	894370-1081		9503-		1	R S T		
(B)	897192-4460		9802-		1	U V		
18	PIPE; INJ NO 3							
(A)	897017-7891		9503-		1	A B C D E M	Z A B C D E F G H I J K L M N O P Q R S T	
(A)	897017-7931		9503-		1	F G H I K N O P		

FUEL INJECTION SYSTEM

FIG-NO. 0-40 B

KEY NO	PART NUMBER	ITC	APPLIED DATE	LR	QTY	4JB1	A-4JB1	Remarks
18	PIPE; INJ NO 3							
(A)	894425-4161		9503-		1	J L		
(A)	897017-7800		9503-		1	W		
(B)	894370-1092		9503-		1	RST		
(B)	897192-4470		9802-		1	UV		
19	PIPE; INJ NO 4							
(A)	897017-7901		9503-		1	ABCDE M	ZABCDEFGHIJKLMNOPQRST	
(A)	897017-7941		9503-		1	FGHI K NOP		
(A)	894425-4171		9503-		1	J L		
(A)	897017-7810		9503-		1	W		
(B)	894370-1101		9503-		1	RST		
(B)	897192-4480		9802-		1	UV		
28	HOSE; FUEL, NOZZLE TO NOZZLE							
	894152-3530		9503-		3	ABCDEFGHIJKLMNOP RSTUVW	ZABCDEFGHIJKLMNOPQRST	
29	CLIP; HOSE, LEAK OFF PIPE							
	894238-6100		9503-		9	ABCDEFGHIJKLMNOP RSTUVW	ZABCDEFGHIJKLMNOPQRST	ID=12
30	HOSE; RUBBER, FUEL LEAK							
	894427-5011		9503-		1	AB		L=320 W/INSULATOR
	894152-9891	A	9502-9502		1	FG IJKLMNO RST W		L=240
	894427-5011	A	9503-9603		1	FG IJKLMNOP RST W	ZA R	L=320 W/INSULATOR
	894427-5012		9604-		1	AB FGHIJKLMNOP RSTUVW	ZA CDEFGHIJKLMNOP R T	L=320 W/INSULATOR
	894339-9482		9503-		1	CDE	B Q S	
31	NOZZLE ASM; INJ							
	897134-5240		9503-		4		ZABCDEFGHIJKLMNOPQRST	
	894122-2625		9503-		4	FGHIJKLMNOP		
	894407-8793		9503-		4	RST		
	894450-0502		9503-		4	W		
	894442-2241		9503-		4	ABCDE UV		
32	HOLDER ASM; NOZZLE							
	894122-2633		9503-		4	FGHIJKLMNOP		
	894372-1950		9503-		4	RST		
	894442-2250		9503-		4	ABCDE		
	894434-1760		9503-		4	W		
	894442-2250		9503-		4	UV	ZABCDEFGHIJKLMNOPQRS	
33	NOZZLE; INJ							
	894122-2642		9503-		4	FGHIJKLMNOP		
	894247-9372		9503-		4	RST		
	894442-4020		9503-		4	ABCDE UV		
	894450-0511		9503-		4	W		
	897134-5250		9503-		4		ZABCDEFGHIJKLMNOPQRST	
35	NUT; NOZZLE RET, NOZZLE HOLDER							
	894174-1840		9503-		4	ABCDE H RSTUVW	ZABCDEFGHIJKLMNOPQRST	
43	SEAT; NOZZLE SPRING, NOZZLE HOLDER							
	894174-1400		9503-		4	RST		

0-40 B FUEL INJECTION SYSTEM

FIG-NO.

KEY NO	PART NAME / PART NUMBER	ITC	APPLIED DATE	LR	QTY	4JB1 (ABCDEFGHIJKLMNOPQRSTUVWXY)	A-4JB1 (ZABCDEFGHIJKLMNOPQRSTUVWX)	Remarks
43	SEAT: NOZZLE SPRING, NOZZLE HOLDER							
	894312-7230		9503-		4	ABCDEFGHIJKLMNOP UVW	ZABCDEFGHIJKLMNOPQRST	
44	SPRING: NOZZLE, NOZZLE HOLDER							
	894174-1410		9503-		4	ABCDEFGHIJKLMNOP RSTUVW	ZABCDEFGHIJKLMNOPQRST	
46	PIN: NOZZLE SET, NOZZLE HOLDER							
	894174-1390		9503-		8	ABCDEFGHIJKLMNOP RSTUVW	ZABCDEFGHIJKLMNOPQRST	
47	SPACER: NOZZLE SPRING, NOZZLE HOLDER							
	894174-1830		9503-		4	ABCDEFGHIJKLMNOP RSTUVW	ZABCDEFGHIJKLMNOPQRST	
50	GASKET: NOZZLE HOLDER --ALSO INCLUDED IN GASKET SET(ENGINE)							
	894326-4390		9503-		4	ABCDEFGHIJKLMNOP RSTUVW	ZABCDEFGHIJKLMNOPQRST	
59	CLAMP: NOZZLE HOLDER							
	894433-4270		9503-		4	ABCDEFGHIJKLMNOP RSTUVW	ZABCDEFGHIJKLMNOPQRST	
61	BOLT: CLAMP NOZZLE HOLDER							
	894433-7171		9503-		4	ABCDEFGHIJKLMNOP RSTUVW	ZABCDEFGHIJKLMNOPQRST	
66	GASKET: INJ NOZZLE --ALSO INCLUDED IN GASKET SET(ENGINE)							
	894125-8591	A	9503-9703		4	ABCDEFG IJKLMNOP RST W	ZABCDE QR	ID=7.2 OD=15.0 T=6.6
	897171-3310		9704-		4	ABCDEFGHIJKLMNOP RSTUVW	ZABCDEFGHIJKLMNOPQRST	
68	CLIP: INJ PIPE							
(A)	894430-0010		9503-		1	ABCDEFGHIJKLMNOP	ZABCDEFGHIJKLMNOPQRST	
(B)	894430-0000		9503-		1	ABCDEFGHIJKLMNOP	ZABCDEFGHIJKLMNOPQRST	
72	BOLT: BRKT TO INJ PUMP							
(A)	050040-8250	A	9503-9804		1	C IJKLMNOP RST	R	M8X25 W/LK WASHER
(A)	028680-8250		9805-		1	C IJKLMNOP RST	K R	M8X25
(A)	050040-8600	A	9503-9804		4	C N RST	R	M8X60 W/LK WASHER
(A)	028080-8600		9805-		4	C N RST	K R	M8X60
(A)	894205-9861	A	9503-9804		6	FG		M8X65
(A)	028080-8600		9805-		6	FGH		M8X65
(A)	509030-0131		9503-		1	N RST		M8X75
(B)	901931-0200		9503-		2	R		M10X20 W/LK WASHER
(B)	050051-0200		9503-		2	W		M10X20 W/LK WASHER
74	BOLT: BRKT TO BODY							
	050140-8220		9503-		2	R W		M8X22 W/WASHER
75	WASHER: PL, BRKT TO INJ PUMP							
	909164-7080		9503-		1	W		ID=8 OD=22
	909164-7080		9503-		1	W		ID=8 OD=22
80	BRACKET: PUMP							
(A)	894152-9051		9503-		1	ABCDEFGHIJKLMNOP	ZABCDEFGHIJKLMNOPQRST	
(B)	894438-0910		9503-		1	W		
83	BOLT: BRKT TO BRKT							
	050040-8250		9503-		1	W		M8X25 W/LK WASHER

FUEL INJECTION SYSTEM

0-40 B

FIG-NO.

KEY NO	PART NAME / PART NUMBER	ITC	APPLIED DATE	LR	QTY	4JB1	A-4JB1	Remarks
87	BOLT: PUMP							
(A)	050040-8200		9503-		2	ABCDEFGHIJKLMNOP	ZABCDEFGHIJKLMNOPQRST	M8X20 W/LK WASHER
(B)	050141-0250		9503-		1	ABCDEFGHIJKLMNOP	ZABCDEFGHIJKLMNOPQRST	M10X25 W/WASHER
113	CLIP: INJ PIPE							
(B)	915419-0721		9503-		3	ABCDEFGHIJKLMNOP RST	ZABCDEFGHIJKLMNOPQRST	
(B)	915419-0721		9503-		2	W		
(B)	894430-0010		9503-		1	ABCDEFGHIJKLMNOP		
(A)	515419-0131		9705-		2	UV		
(B)	894430-0000		9805-		1	ABCDEFGHIJKLMNOP		
118	BOLT: CLIP, INJ PIPE							
	050140-8180		9503-		1	ABCDEFGHIJKLMNOP	ZABCDEFGHIJKLMNOPQRST	M8X18 W/WASHER
136	CAP: NOZZLE, FUEL END							
	894473-9670		9503-		1	ABCDEFGHIJKLMNOP RSTUVW	ZABCDEFGHIJKLMNOPQRST	
140	SHIM: NOZZLE SPRING, NOZZLE HOLDER							
	894174-1420		9503-		AR	RST	Z T	T=0.500
	894174-1430		9503-		AR	RST	T	T=0.525
	894174-1440		9503-		AR	RST	Z T	T=0.550
	894174-1450		9503-		AR	RST	T	T=0.575
	894174-1460		9503-		AR	RST	D T	T=0.600
	894174-1470		9503-		AR	RST	T	T=0.625
	894174-1480		9503-		AR	RST	T	T=0.650
	894174-1490		9503-		AR	RST	T	T=0.675
	894174-1500		9503-		AR	RST	T	T=0.700
	894174-1510		9503-		AR	RST	T	T=0.725
	894174-1520		9503-		AR	RST	T	T=0.750
	894174-1530		9503-		AR	RST	T	T=0.775
	894174-1540		9503-		AR	RST	T	T=0.800
	894174-1550		9503-		AR	RST	T	T=0.825
	894174-1560		9503-		AR	RST	T	T=0.850
	894174-1570		9503-		AR	RST	T	T=0.875
	894174-1580		9503-		AR	RST	T	T=0.900
	894174-1590		9503-		AR	RST	T	T=0.925
	894174-1600		9503-		AR	RST	T	T=0.950
	894174-1610		9503-		AR	RST	T	T=0.975
	894174-1620		9503-		AR	RST	T	T=1.000
	894174-1630		9503-		AR	RST	T	T=1.025
	894174-1640		9503-		AR	RST	T	T=1.050
	894174-1650		9503-		AR	RST	T	T=1.075
	894174-1660		9503-		AR	RST	T	T=1.100
	894174-1670		9503-		AR	RST	T	T=1.125
	894174-1680		9503-		AR	RST	T	T=1.150
	894174-1690		9503-		AR	RST	T	T=1.175
	894174-1700		9503-		AR	RST	T	T=1.200
	894174-1710		9503-		AR	RST	T	T=1.225
	894174-1720		9503-		AR	RST	T	T=1.250
	894174-1730		9503-		AR	RST	T	T=1.275
	894174-1740		9503-		AR	RST	T	T=1.300
	894174-1750		9503-		AR	RST	N T	T=1.325
	894174-1760		9503-		AR	RST	T	T=1.350

0-40 B FUEL INJECTION SYSTEM

FIG-NO.

KEY. NO	PART NUMBER	ITC	APPLIED DATE	LR	QTY	4JB1 ABCDE (PY, PY01, PY02, PY03, PY04)	4JB1 FGHIJ (PV, PV01, PV02, PW, PW02)	4JB1 KLMNO (PW03, PW04, PW06, PW07, PW08)	4JB1 PQRST (PW09, –, PTQ01, PTQ, TPB)	4JB1 UVWXY (TPK, TPK01, TPX, –, –)	A-4JB1 ZABCD (PAA, PAA01, PAA02, PAA03, PAA04)	A-4JB1 EFGHI (PAA05, PAA06, PAA07, PAA08, PAA09)	A-4JB1 JKLMN (PAA10, PAA11, PAA12, PAA13, PAA14)	A-4JB1 OPQRS (PAA15, PAW01, PYA, PYA01, PYA02)	A-4JB1 TUVWX (PYA03, –, –, –, –)	Remarks
140	SHIM: NOZZLE SPRING, NOZZLE HOLDER															
	894174-1770		9503-		AR				R S T						T	T=1.375
	894174-1780		9503-		AR				R S T						T	T=1.400
	894174-1790		9503-		AR				R S T						T	T=1.425
	894174-1800		9503-		AR				R S T						T	T=1.450
	894174-1810		9503-		AR				R S T						T	T=1.475
	894174-1820		9503-		AR				R S T						T	T=1.500
	897027-4320		9503-		AR		F G H I J	K L M N O	P							T=0.100
	897027-4330		9503-		AR		F G H I J	K L M N O	P							T=0.200
	897027-4340		9503-		AR		F G H I J	K L M N O	P							T=0.300
	897027-4350		9503-		AR		F G H I J	K L M N O	P							T=0.400
	897027-4360		9503-		AR		F G H I J	K L M N O	P							T=0.500
	897027-4370		9503-		AR		F G H I J	K L M N O	P							T=0.520
	897027-4380		9503-		AR		F G H I J	K L M N O	P							T=0.540
	897027-4390		9503-		AR		F G H I J	K L M N O	P							T=0.560
	897116-0390		9503-		AR	A B C D E				U V W	Z A B C D	E F G H I	J K L M N	O P Q R S		T=0.540
	897116-0400		9503-		AR	A B C D E				U V W	Z A B C D	E F G H I	J K L M N	O P Q R S		T=0.550
	897116-0320		9503-		AR	A B C D E				U V W	Z A B C D	E F G H I	J K L M N	O P Q R S		T=0.200
	897116-0410		9503-		AR	A B C D E				U V W	Z A B C D	E F G H I	J K L M N	O P Q R S		T=0.560
	897116-0420		9503-		AR	A B C D E				U V W	Z A B C D	E F G H I	J K L M N	O P Q R S		T=0.570
	897116-0440		9503-		AR	A B C D E				U V W	Z A B C D	E F G H I	J K L M N	O P Q R S		T=0.590
	897116-0380		9503-		AR	A B C D E				U V W	Z A B C D	E F G H I	J K L M N	O P Q R S		T=0.530
	897116-0430		9503-		AR	A B C D E				U V W	Z A B C D	E F G H I	J K L M N	O P Q R S		T=0.580
	897116-0360		9503-		AR	A B C D E				U V W	Z A B C D	E F G H I	J K L M N	O P Q R S		T=0.510
	897116-0350		9503-		AR	A B C D E				U V W	Z A B C D	E F G H I	J K L M N	O P Q R S		T=0.500
	897116-0330		9503-		AR	A B C D E				U V W	Z A B C D	E F G H I	J K L M N	O P Q R S		T=0.300
	897116-0340		9503-		AR	A B C D E				U V W	Z A B C D	E F G H I	J K L M N	O P Q R S		T=0.400
	897116-0290		9503-		AR	A B C D E				U V W	Z A B C D	E F G H I	J K L M N	O P Q R S		T=0.100
	897027-4400		9503-		AR		F G H I J	K L M N O	P							T=0.580
	897116-0370		9503-		AR	A B C D E				U V W	Z A B C D	E F G H I	J K L M N	O P Q R S		T=0.520
214	ORIFICE: INJ PUMP															
	897011-6871		9503-		1	A B							K			
	897011-6871		9403-9403		1	C D										

MEMO

0-41	FUEL FILTER AND BRACKET
FIG-NO.	(NO.1)

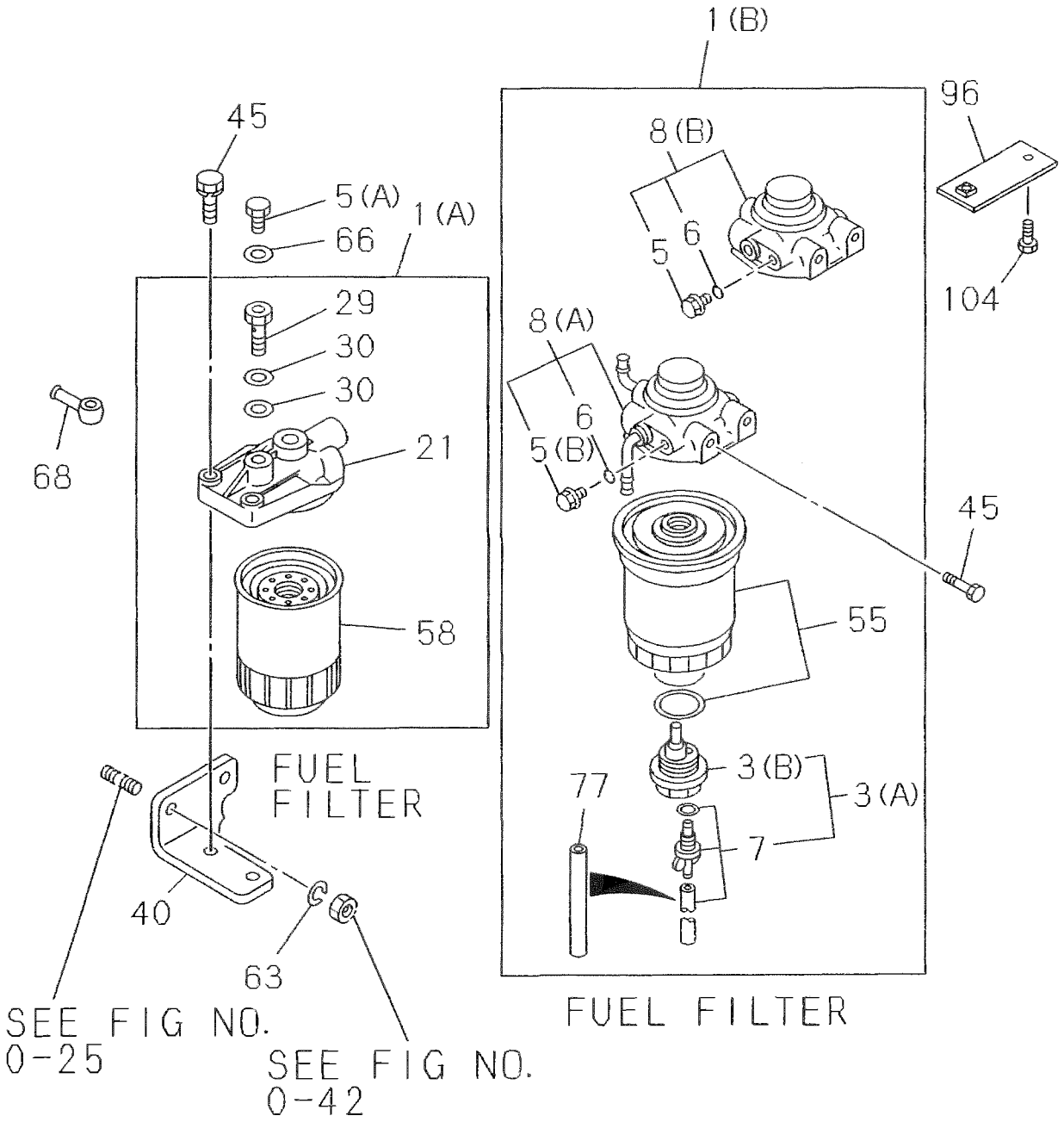

041A0150796

FUEL FILTER AND BRACKET

(NO.2)

0-41

FIG-NO.

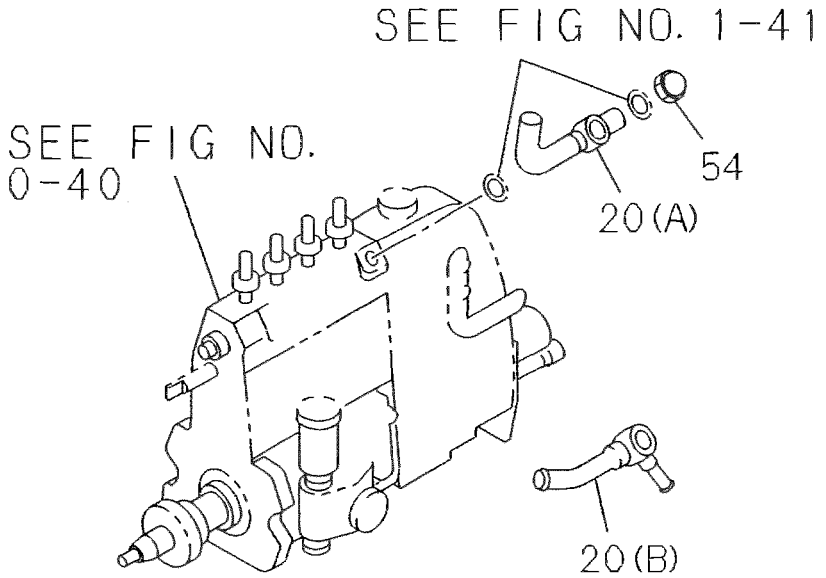

041A0250796

0-41 A FUEL FILTER AND BRACKET

FIG-NO.

KEY. NO — PART NAME

4JB1

KEY NO	PART NUMBER	ITC	APPLIED DATE	LR	QTY	Applicable models (A B C D E F G H I J K L M N O P Q R S T U V W X Y Z A B C D E F G H I J K L M N O P Q R S T U V W X)	Remarks
1	FILTER ASM: FUEL						
(A)	894143-4771	A	9503-9503		1	A B C D E F H I J K L N O P Q V W X Z A K L M N O P	
(A)	894151-7451		9504-		1	A B C D E F H I J K L N O P Q U V W X Z A K L M N O P	
(A)	897011-6850		9503-		1	G M R S T B C	
(B)	897028-6962		9503-		1	I J	
(B)	894369-1483		9503-		1	Q R S	
(B)	894367-2922		9711-		1	H	
3	SENSOR ASM: FUEL FILTER						
(A)	897028-7000		9503-		1	I J	
(A)	894367-2940		9711-		1	H	
(A)	894450-1390		9503-		1	Q R S	
(B)	897028-6980		9503-		1	I J	
(B)	894450-1420		9503-		1	H Q R S	
5	BOLT: FUEL FILTER						
(A)	909202-3080		9503-		1	A B C D E F G H I J K L M N O P Q R S T U V W X Z A B C K L M N O P	
(B)	894132-6740		9503-		1	H I J Q R S	
6	GASKET: FUEL FILTER						
	894132-6750		9503-		1	H I J Q R S	
7	PLUG: SENSOR, FUEL FILTER						
	894367-9570		9503-		1	H	
	897028-6990		9503-		1	I J	
	894450-1460		9503-		1	Q R S	
8	COVER: FUEL FILTER						
(A)	894450-1333		9503-		1	Q R S	
(B)	897028-6973		9503-		1	I J	
(A)	894367-2933		9503-		1	H	
20	JOINT: EYE, FUEL FILTER						
(A)	894448-8651		9503-		1	A B C F R S Z A K L M N O P	
(A)	894428-8110		9503-		1	D E H I K L P Q U	
(A)	894448-8651		9503-9508		1	G J N O	
(A)	894428-8110		9509-		1	G J N O	
(A)	894336-8790		9503-		1	M T B C	
21	COVER: UPR, FUEL FILTER						
	513212-0751		9503-		1	A B C D E F G H I J K L M N O P Q R S T U V W X Z A B C K L M N O P	
29	VALVE: OVERFLOW						
	913260-0562		9503-		1	A B C D E F H I J K L N O P Q U V W X Z A K L M N O P	
	897011-6860		9503-		1	G M R S T B C	
30	GASKET: OVERFLOW VLV					—ALSO INCLUDED IN GASKET SET(ENGINE)	
	909572-0140		9503-		2	A B C D E F G H I J K L M N O P Q R S T U V W X Z A B C K L M N O P	ID=14.2
40	BRACKET: FUEL FILTER						
	894410-4040		9503-		1	A B C D E F G H I J K L M N O P Q R S T U V W X Z A B C K L M N O P	
45	BOLT: FUEL FILTER						
	050041-0320	A	9503-9804		2	A B C D E F G H I J K L M N O P Q R S T U V W X Z A B C K L M N O P	M10X32 W/LK WASHER

FUEL FILTER AND BRACKET

0-41 A
FIG-NO.

KEY NO — PART NAME

4JB1
PPPPPPPPPPPPPPPPPPPPPPPP PPPPPPPPPPPPPPPPPPPP
AAAAAAAAAAAAAAAAAAAAABBB DDFHKKKKKKKLLLLLLNNN
 0000000011111111122 2 00 0   0000LL UO0 00 00
 1234568923345678901 2 23 1   1234 0 G11 22 11
U (under P), 1, U, U, U; G, G, E, G
ABCDEFGHIJKLMNOPQRSTUVWXYZABCDEFGHIJKLMNOPQRSTUVWX

KEY NO	PART NAME / PART NUMBER	ITC	APPLIED DATE	LR	QTY	4JB1	Remarks
45	BOLT; FUEL FILTER						
	028681-0350		9805-		2	ABCDE FGHIJ KLMNO PQRST UVWX ZABC KLMNOP	M10X32
55	ELEMENT KIT; FUEL FILTER						
	894369-2993		9503-		1	HIJ QRS	
58	ELEMENT; FUEL FILTER						
	894151-7440		9503-		1	ABCDE F HIJ KL NO PQ VWX ZA KLMNOP	
	894414-7963		9503-		1	U	
	894143-4790		9503-		1	G M RST BC	
63	WASHER; LK, FUEL FILTER						
	909150-5100		9503-		2	ABCDE FGHIJ KLMNO PQRST UVWX ZABC KLMNOP	ID=10.2
66	GASKET; PLUG, FUEL FILTER						
	909571-4080		9503-		2	ABCDE FGHIJ KLMNO PQRST UVWX ZA C	ID=8.2 OD=14.0 T=1.0
	909571-4080		9503-		1	B KLMNOP	ID=8.2 OD=14.0 T=1.0
68	JOINT; EYE, FUEL FILTER						
	894428-8070		9503-		1	WX	
77	HOSE; FUEL FILTER						
	894367-9560		9503-		1	H	

0-41 B FUEL FILTER AND BRACKET

FIG-NO.

KEY NO	PART NAME / PART NUMBER	ITC	APPLIED DATE	LR	QTY	4JB1	A-4JB1	Remarks
						ABCDEFGHIJKLMNOPQRSTUVWXY	ZABCDEFGHIJKLMNOPQRSTUVWX	
1	FILTER ASM; FUEL							
(A)	897011-6850		9503-		1	AB	ZA JK M R	
(A)	894143-4771	A	9503-9503		1	FG IJKLMNOP		
(A)	894151-7451		9504-		1	FGHIJKLMNOP	CDEFGHI L NOP T	
(B)	894367-2922		9503-		1	CDE V	B Q S	
(B)	894362-1821	A	9503-9509		1	RST		
(B)	894362-1822		9510-		1	RST		
(B)	894172-0295		9503-		1	W		
3	SENSOR ASM; FUEL FILTER							
(A)	894367-2940		9503-		1	CDE V	B Q S	
(A)	897047-3930		9503-		1	RST		
(A)	894247-9260		9503-		1	W		
(B)	894450-1420		9503-		1	CDE V	B Q S	
(B)	894247-9270		9503-		1	RST W		
5	BOLT; FUEL FILTER							
(B)	909612-0210		9503-		1	RST		
(B)	894132-6740		9503-		1	CDE VW	B Q S	
(A)	909202-3080		9503-		1	AB FGHIJKLMNOP	ZA CDEFGHIJKLMNOP R T	
6	GASKET; DRAIN PLUG & CONNECTOR							
	894132-6750		9503-		1	CDE VW	B Q S	
	909571-4060		9503-		1	RST		
7	PLUG; SENSOR							
	894367-9570		9503-		1	CDE V	B Q S	
	897047-3920		9503-		1	RST		
	894247-9730		9503-		1	W		
8	BODY ASM; SEDIMENTER							
(A)	894367-2933		9503-		1	CDE P V	Q	
(A)	897016-9071		9503-		1	RST		
(A)	894450-1352		9503-		1	W		
20	JOINT; EYE, FUEL FILTER							
(A)	894448-8651		9503-		1	AB FG IJKLMNOP		
(A)	894428-8110		9503-		1	H	ZA CDEFGHIJKLMNOP R T	
(B)	897046-7960		9503-		1	CDE	B Q S	
21	COVER; UPR, FUEL FILTER							
	513212-0751		9503-		1	AB H	ZA HI L NOP R T	
	513212-0751		9503-		1	FG IJKLMNOP	CDEFG JK M	
29	VALVE; OVERFLOW							
	897011-6860		9503-		1	AB	ZA R	
	913260-0552		9503-		1	FGHIJKLMNOP	CDEFGHIJKLMNOP T	
30	GASKET; OVERFLOW VLV --ALSO INCLUDED IN GASKET SET(ENGINE)							
	909572-0140		9503-		2	AB FGHIJKLMNOP	ZA CDEFGHIJKLMNOP R T	ID=14.2
40	BRACKET; FUEL FILTER							
	894410-4040		9503-		1	AB FGHIJKLMNOP	ZA CDEFGHIJKLMNOP R T	

FUEL FILTER AND BRACKET

0-41 B
FIG-NO.

KEY NO	PART NAME / PART NUMBER	ITC	APPLIED DATE	QTY	4JB1	A-4JB1	Remarks
45	BOLT; FUEL FILTER						
	050041-0320	A	9503-9804	2	AB FG IJKLMNOP	ZA CDEFG R	M10X32 W/LK WASHER
	028681-0350		9805-	2	AB FGHIJKLMNOP	ZA CDEFGHIJKLMNOP R T	M10X32
	050040-8220	A	9503-9804	1	RST		M8X22 W/LK WASHER
	028680-8200		9805-	1	RST		M8X22
54	NUT; CAP, OVERFLOW VLV						
	109468-0021		9503-	1	ABCDEFG IJKLMNOP	ZABCDEFGHIJKLMNOPQRST	
55	ELEMENT KIT; FUEL FILTER						
	894369-2993		9503-	1	CDE RST V	B Q S	
	894332-9551		9503-	1	W		
	894414-7963		9503-	1	H	HI L NOP T	
58	ELEMENT; FUEL FILTER						
	894143-4790		9503-	1	AB	ZA JK M R	
	894151-7440		9503-	1	FG IJKLMNOP	CDEFG	
63	WASHER; LK, FUEL FILTER						
	909150-5100		9503-	2	AB FGHIJKLMNOP	ZA CDEFGHIJKLMNOP R T	ID=10.2
66	GASKET; PLUG, FUEL FILTER						
	909571-4080		9503-	2	AB FGHIJKLM P		ID=8.2 OD=14.0 T=1.0
	909571-4080		9503-	1	NO V	ZA CDEFGHIJKLMNOP R T	ID=8.2 OD=14.0 T=1.0
77	HOSE; FUEL FILTER						
	894367-9560		9503-	1	CDE V	B Q S	
96	STAY; FUEL FILTER						
	894367-4400		9503-	1	RST		
104	BOLT; STAY						
	050040-8180	A	9503-9804	1	RST		M8X18 W/LK WASHER
	028080-8160		9805-	1	RST		M8X18

0-42	FUEL PUMP AND PIPE
FIG-NO.	

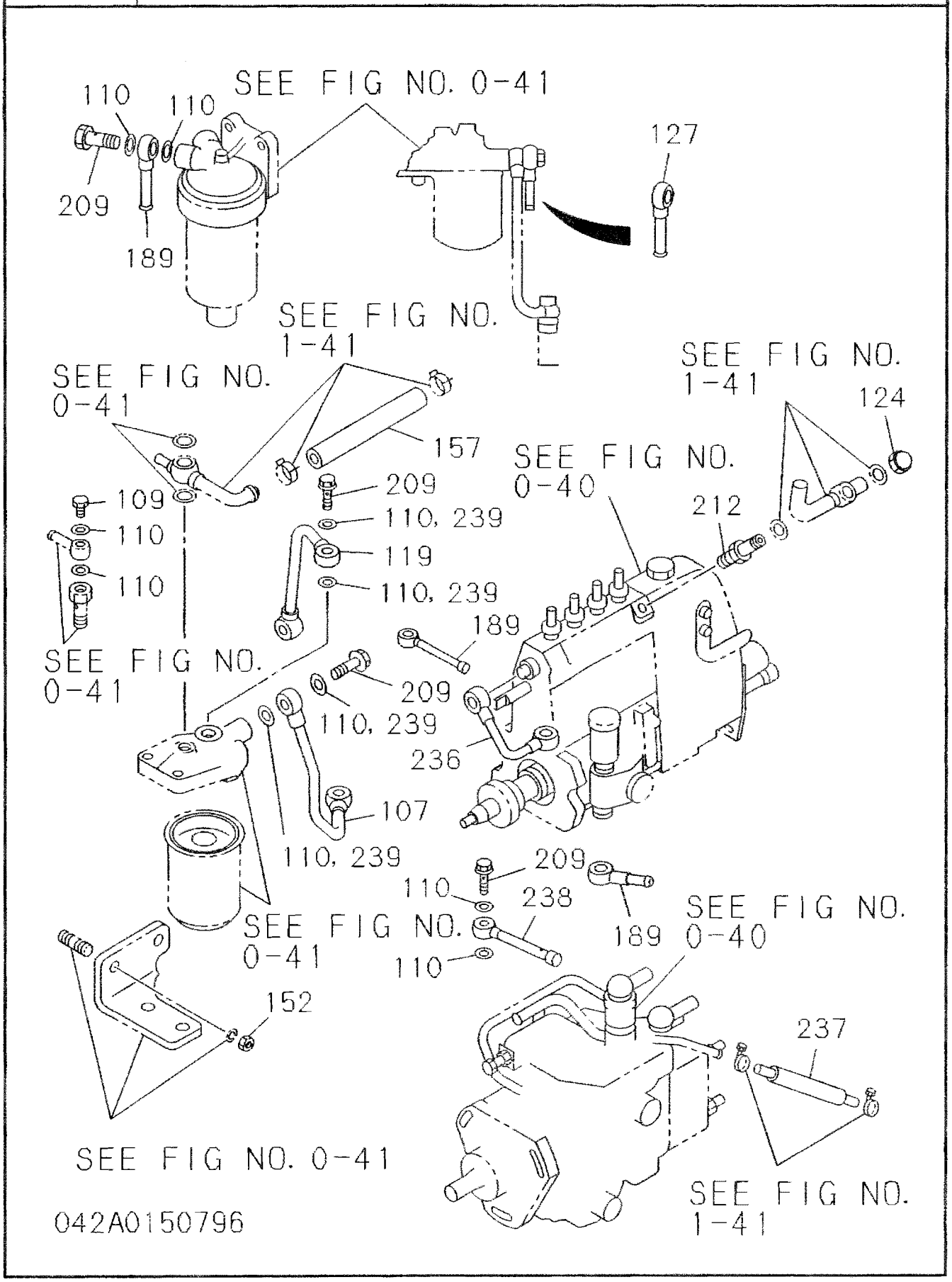

FUEL PUMP AND PIPE

0-42 A FIG-NO.

4JB1

PPPPP PPPPP PPPPP PPPPP PPPP PPPPP PPPPP PPPPP PPPPP
AAAAA AAAAA AAAAA AAAAA ABBB DDFHK KKKKK KLLLL LLNNN
0000 00001 11111 11122 2 00 0 0000L L U00 00 00
1234 56892 33456 78901 2 23 1 1234 0 G11 22 11
U 1 U U U
G G F G

KEY. NO	PART NAME / PART NUMBER	ITC	APPLIED DATE	LR	QTY	ABCDE	FGHIJ	KLMNO	PQRST	UVWXY	ZABCD	EFGHI	JKLMN	OPQRS	TUVWX	Remarks
107	PIPE; FUEL, FEED PUMP TO FUEL FILTER															
	894424-1421		9503-		1	ABCDE	FGHIJ	KLMNO	PQRST	UVWX	ZABC		KL	OP		
	897014-4220		9503-		1								MN			
109	BOLT; JOINT, FUEL LEAK OFF PIPE, FILTER															
	909906-3141		9503-		1					WX						
110	GASKET; JOINT BOLT, FUEL PIPE --ALSO INCLUDED IN GASKET SET(ENGINE)															
	909572-0140		9503-		4	ABCDE	FGHIJ	KLMNO	PQRST	UVWX	ZABC		KLMN	OP		ID=14.2
	909572-0140		9503-		4						Z					ID=14.2
	909571-4080		9503-		2					WX						ID=8.2 OD=14.0 T=1.0
	909572-0140		9503-		2					WX						ID=14.2
119	PIPE; FUEL, FUEL FILTER TO INJ PUMP															
	894424-1430		9503-		1	ABCDE	FGHIJ	KLMNO	PQRST	UVWX	ZABC		KLMN	OP		
124	NUT; CAP, FUEL PIPE															
	109468-0021		9503-		1	ABCDE	FGHIJ	KLMNO	PQRST	UVW	ZABC		KLMN	OP		
152	NUT; BRKT															
	909110-5100		9503-		2	ABCDE	FGHIJ	KLMNO	PQRST	UVWX	ZABC		KLMN	OP		M10
157	HOSE; FUEL FILTER TO INJ PUMP															
	001209-2500		9503-		1	ABC	F		RS		ZA		KLMN	OP		L=250
	001209-1800		9503-		1	DE	HI	KLM	PQ T	U	BC					L=180
	001209-2500		9503-9508		1		G J	NO								L=250
	001209-1800		9509-		1		G J	NO								L=180
	509360-7740		9503-		1					V						L=195
	001209-1500		9503-		1					WX						L=150
189	PIPE ASM; FUEL, FEED PUMP															
	515411-2250		9503-		1		G									
	515411-2231		9503-		1	ABCDE	F HIJ	KLMNO	PQRST	UVWX	ZABC		KLMN	OP		
209	BOLT; EYE, FUEL FILTER															
	909906-3251		9503-		2	ABCDE	FGHIJ	KLMNO	PQRST	UVWX	ZABC		KLMN	OP		M14X29 EYE BOLT
	909906-3251		9503-		2						ZA					M14X29 EYE BOLT
212	VALVE; OVERFLOW															
	113260-0011		9503-		1	ABCDE	F HIJ	KL NO	PQ	U	ZA		KLMN	OP		
	113260-0011		9407-9408		1		G									
238	JOINT; EYE															
	894148-3900		9503-		2						Z					

0-42 B FUEL PUMP AND PIPE

FIG-NO.

KEY NO	PART NAME / PART NUMBER	ITC	APPLIED DATE	LR	QTY	4JB1 (ABCDEFGHIJKLMNOPQRSTUVWXY)	A-4JB1 (ZABCDEFGHIJKLMNOPQRSTUVWX)	Remarks
107	PIPE; FUEL, FEED PUMP TO FUEL FILTER							
	894424-1421		9503-		1	AB FGHIJKLMNOP	ZA CDEFGHIJ LMNOP T WX	
	897145-1560		9503-		1		K R	
110	GASKET; JOINT BOLT, FUEL PIPE --ALSO INCLUDED IN GASKET SET(ENGINE)							
	909572-0140		9503-		4	AB FGHIJKLMNOP	HI P	ID=14.2
	909572-0140		9503-		4	J MN		ID=14.2
119	PIPE; FUEL, FUEL FILTER TO INJ PUMP							
	894424-1430		9503-		1	AB FGHIJKLMNOP	ZA CDEFGHIJKLMNOP R T	
124	NUT; CAP, FUEL PIPE							
	109468-0021		9509-		1	H	X	
127	PIPE; FUEL, INL							
	894148-3902		9503-		1		K R	
152	NUT; BRKT							
	909110-5100		9503-		2	AB FGHIJKLMNOP	ZA CDEFGHIJKLMNOP R T	M10
157	HOSE; FUEL FILTER TO INJ PUMP							
	001209-2500		9503-		1	AB FG IJKLMNOP		L=250
	001209-1800		9503-		1	H	ZA CDEFGHIJKLMNOP R T	L=180
189	PIPE ASM; FUEL, FEED PUMP							
	515411-2231		9503-		1	AB FGHIJKLMNOP	CDEFGHIJKL NOP T	
	515411-2250		9503-		1	CDE	ZAB M QRS	
209	BOLT; EYE, FUEL FILTER							
	909906-3251		9503-		2	AB FGHIJKLMNOP	ZA CDEFGHIJ LMNOP T	M14X29 EYE BOLT
	909906-3251		9503-		1		K R T	M14X29 EYE BOLT
	109675-0231		9503-		1		K R	M14X45
	515759-0270		9805-		1		T	M14X45
212	VALVE; OVERFLOW							
	113260-0011		9503-		1	A CDEFGHIJKLMNOP	BC EFGHI N PQ ST	
236	PIPE; FUEL, FEED PUMP TO INJ PUMP							
	897046-7950		9503-		1	CDE	B Q S	
237	HOSE; RUBBER, FUEL FILTER TO PUMP							
	001208-4800		9503-		1	RS		L=480
	897032-5040		9503-		1	T		
239	GASKET							
	909572-0140		9503-		4		ZA CDEFG IJ NO T	ID=14.2
	909572-0140		9503-		5		R	ID=14.2
	909572-0140		9805-		6		HI KLM P R T	ID=14.2

Model code header (4JB1): PPPPPPPPPPPPPPPPP PPTTTT / YYYYYVVVWWWWWWWWW TTPPPP / 0000 00 0000000 QQBKKX / 1234 12 2346789 0 0 / 1 1

Model code header (A-4JB1): PPPPPPPPPPPPPPPPPPPPPPP / AAAAAAAAAAAAAAAAAAYYYY / AAAAAAAAAAAAAAAAAWAAAA / 00000000111110 000 / 123456789012345 1 23

MEMO

0-50	OIL COOLER AND OIL FILTER
FIG-NO.	(NO.1)

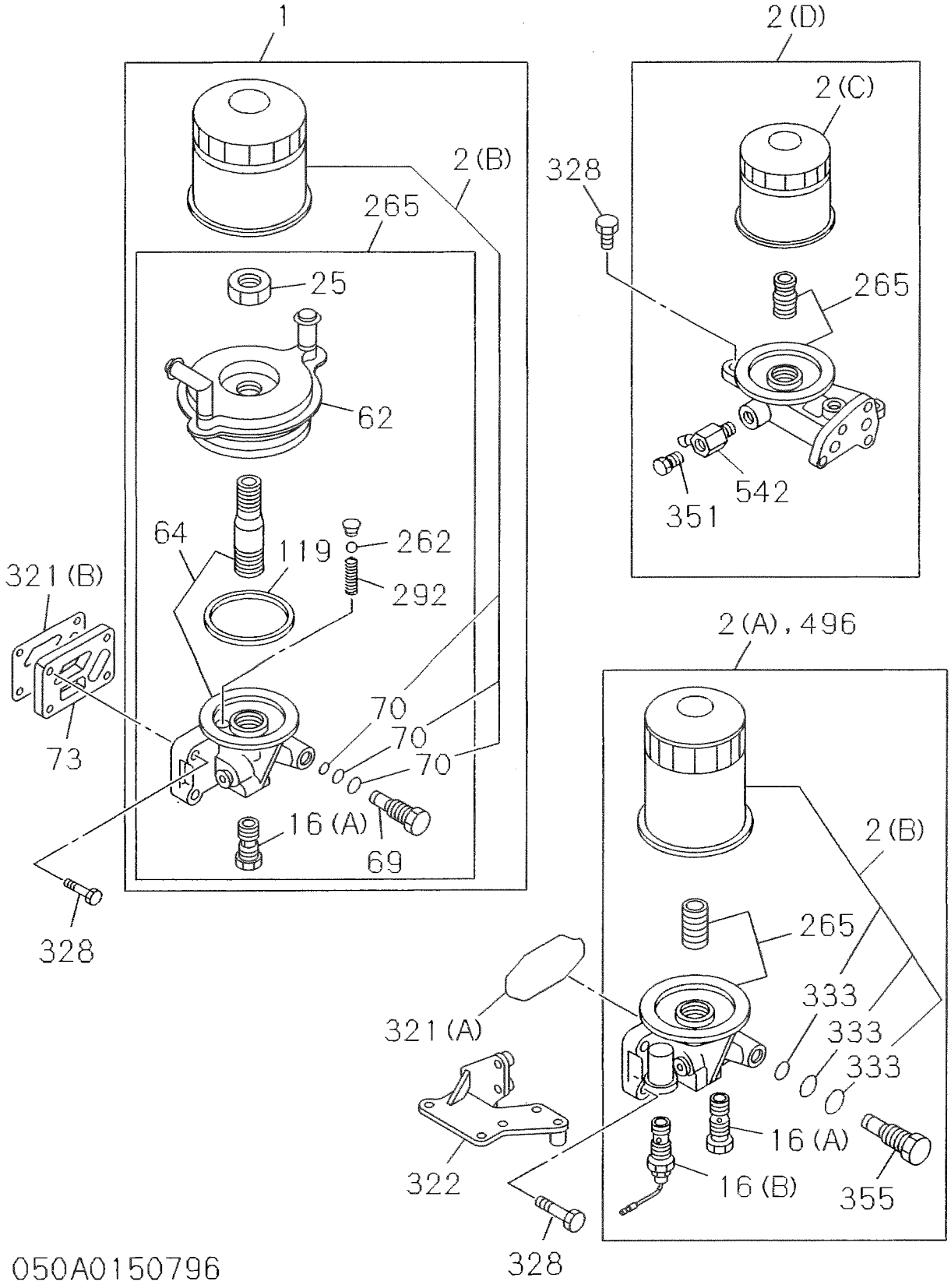

OIL COOLER AND OIL FILTER

(NO.2)

0-50

FIG-NO.

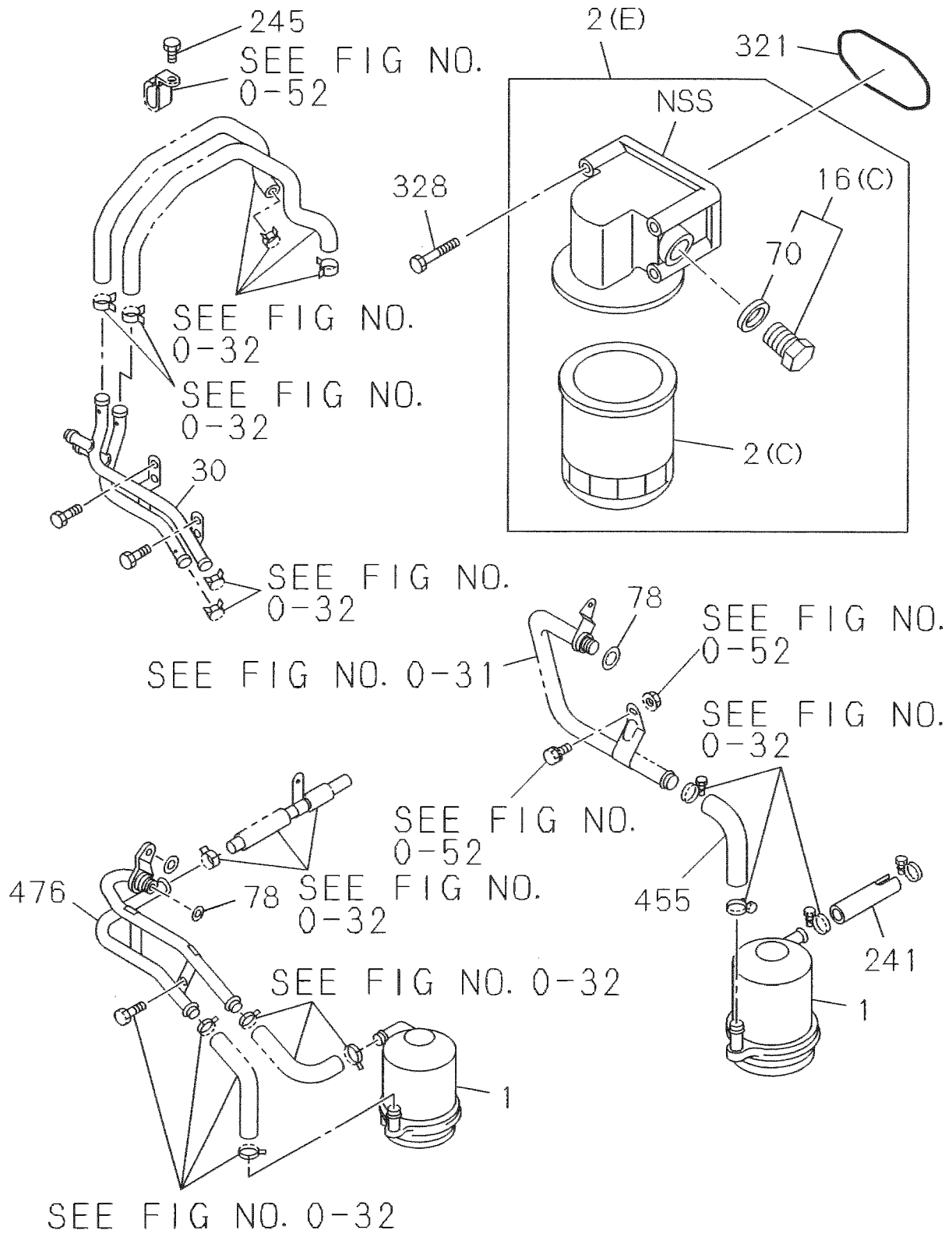

050A0250796

0-50 A OIL COOLER AND OIL FILTER

FIG-NO.

KEY NO / PART NAME

4JB1

KEY NO	PART NUMBER	ITC	APPLIED DATE	LR	QTY	ABCDE	FGHIJ	KLMNO	PQRST	UVWXY	ZABCD	EFGHI	JKLMN	OPQRS	TUVWX	Remarks
1	FILTER & COOLER ASM; OIL															
	894175-4691		9503-		1		F	KL								
2	ELEMENT; OIL FILTER															
(A)	897021-5530		9503-		1					WX						
(A)	894316-3420		9503-		1						C					
(B)	897049-7080		9503-		1	ABCDE	GHIJ	MNO	PQRST	UV	ZAB D	EFGHI	JKLMN	OPQRS		
(B)	894428-9310		9503-		1		F	KL			C					
(B)	894360-4260		9503-		1					WX						
16	VALVE ASM; RELIEF, OIL FILTER															
(A)	894167-8820		9503-		1	ABCDE	FGHIJ	KLMNO	PQRST	VWX	ZABCD	EFGHI	JKLMN	OPQRS		
25	NUT; CORE TO BODY															
	894343-2160		9503-		1		F	KL								
62	COOLER ASM; OIL															
	894401-6800		9503-		1		F	KL								
64	BODY; OIL FILTER & OIL COOLER															
	894401-6781		9503-		1		F	KL								
78	GASKET; PIPE															
	909561-2180		9503-		1		F	KL								
119	GASKET; ADAPTER, OIL COOLER															
	894383-7200		9503-		1		F	KL								
241	HOSE; RUBBER, COOLER TO PUMP															
	897022-3140		9503-		1		F	KL								
262	BALL; STEEL, BODY, OIL FILTER															
	900097-0110		9503-		1		F	KL								3/8" BALL
265	BODY; OIL FILTER															
	894329-6220		9503-		1	ABCDE	GHIJ	MNO	PQRST		ZAB D	EFGH	KLM	OPQRS		
292	SPRING; ELEMENT															
	894401-6790		9503-		1		F	KL								
321	GASKET; OIL FILTER TO C/BL --ALSO INCLUDED IN GASKET SET(ENGINE)															
(A)	897065-9830		9503-		1	ABCDE	FGHIJ	KLMNO	PQRST	UVWX	ZABCD	EFGHI	JKLMN	OPQRS		
328	BOLT; OIL FILTER															
	050140-8300	A	9503-9804		4	ABCDE	FGHIJ	KLMNO	PQRST	UVWX	ZABCD	EFGHI	JKLMN	OPQRS		M8X30 W/WASHER
	028680-8300		9805-		4	ABCDE	FGHIJ	KLMNO	PQRST	UVWX	ZABCD	EFGHI	JKLMN	OPQRS		M8X30
333	GASKET; OIL FILTER															
	894167-8840		9503-		1	ABCDE	FGHIJ	KLMNO	PQRST	V	ZABCD	EFGHI	JKLMN	OPQRS		ID=13.6
	894167-8850		9503-		1	ABCDE	FGHIJ	KLMNO	PQRST	V	ZABCD	EFGHI	JKLMN	OPQRS		ID=8.8
	894167-8860		9503-		1	ABCDE	FGHIJ	KLMNO	PQRST	V	ZABCD	EFGHI	JKLMN	OPQRS		ID=8.6
355	PLUG; OIL PRESS															
	894167-8830		9503-		1	ABCDE	FGHIJ	KLMNO	PQRST	V	ZABCD	EFGHI	JKLMN	OPQRS		

OIL COOLER AND OIL FILTER

FIG-NO. 0-50 A

4JB1

Column	A	B	C	D	E	F	G	H	I	J	K	L	M	N	O	P	Q	R	S	T	U	V	W	X	Y
Model	PA	PA01	PA02	PA03	PA04	PA05	PA06	PA08	PA09	PA12	PA13	PA13UG	PA14	PA15	PA16	PA17	PA18	PA19	PA20	PA21	PA22	PB	PB02	PB03	

Column	Z	A	B	C	D	E	F	G	H	I	J	K	L	M	N	O	P	Q	R	S	T	U	V	W	X
Model	PD	PD01	PF	PH	PK	PK01	PK02	PK03	PK04	PKL	PKL01	PL	PLUG	PL01	PL01UG	PL02	PL02UF	PN	PN01	PN01UG					

KEY NO	PART NAME / PART NUMBER	ITC	APPLIED DATE	LR	QTY	ABCDEFGHIJKLMNOPQRSTUVWXY	ZABCDEFGHIJKLMNOPQRSTUVWX	Remarks
455	HOSE; RUBBER, HD TO OIL COOLER							
	894174-4640		9503-		1	F KL		
496	FILTER ASM; OIL							
	894462-1371		9503-		1	ABCDE GHIJ MNO PQRST UV	ZAB D EFGHI JKLMN OPQRS	

0-50 B OIL COOLER AND OIL FILTER

FIG-NO.

KEY. NO — PART NAME

```
4JB1                                                A-4JB1
PPPPPPPPPPPPPPPPP PPTTTT                            PPPPPPPPPPPPPPPPPPPPP
YYYYYVVVWWWWWWWW TTPPPP                             AAAAAAAAAAAAAAAAAYYYY
 0000 00 0000000 OOBKKX                             AAAAAAAAAAAAAAAAWAAAA
 1234 12 2346789  0  0                               0000000001111110 000
                  1  1                               123456789012345 1 123
ABCDEFGHIJKLMNOPQRSTUVWXY                           ZABCDEFGHIJKLMNOPQRSTUVWX
```

KEY NO	PART NUMBER	ITC	APPLIED DATE	LR	QTY	4JB1	A-4JB1	Remarks
1	FILTER & COOLER ASM; OIL							
	894175-4691		9503-		1	L		
	897011-4871		9503-		1	R S		
	897035-8181		9503-		1	T		
	894328-0991		9503-		1	W		
	894327-2721		9705-		1	U V		
2	ELEMENT; OIL FILTER							
(A)	894321-0501		9503-		1	A B		
(A)	897021-5530		9503-		1	C	R	
(A)	894462-1371		9503-		1	D E F G H I J K M N O P	Z A B C E F G H I J K M N O P Q S	
(E)	897183-7330		9709-		1		T	
(D)	894441-9480		9503-		1		D L	
(B)	894428-9310		9503-		1	A B L		
(B)	897049-7080		9709-		1	U V		
(B)	894360-4260		9503-		1	C	R	
(B)	897049-7080		9503-		1	D E F G H I J K M N O P R S T W	Z A B C E F G H I J K M N O P Q S	
(C)	894430-9831		9503-		1		D L T	
16	VALVE ASM; RELIEF							
(A)	894167-8820		9503-		1	A B C D E F G H I J K L M N O P U V	Z A B C E F G H I J K M N O P Q R S	
(A)	513160-0030		9503-		1	R S W	L T	
(A)	894335-9540		9709-		1	T		
(B)	894172-3840		9503-		1	A B		
25	NUT; CORE TO BODY							
	894343-2160		9503-		1	L R S T W		
30	PIPE ASM; OIL COOLER							
	894442-1572		9503-		1	W		
62	COOLER ASM; OIL							
	894401-6800		9503-		1	L U V		
	897011-2600		9503-		1	R S		
	894360-4280		9503-		1	W		
64	BODY; OIL FILTER & OIL COOLER							
	894401-6781		9503-		1	L		
	897081-7560		9705-		1	U V		
	897025-6561		9503-		1	R S T		
	897081-7590		9503-		1	W		
69	PLUG; BODY, OIL FILTER							
	894167-8830		9503-		1	A B C D E F G I J K L M N O P R S T U V W	Z A B C E F G H I J K L M N O P Q R S T	
70	GASKET; PLUG, OIL FILTER							
	894167-8840		9503-		1	A B C D E F G I J K L M N O P R S T U V W	Z A B C E F G H I J K L M N O P Q R S T	ID=13.6
	894167-8850		9503-		1	A B C D E F G I J K L M N O P R S T U V W	Z A B C E F G H I J K L M N O P Q R S T	ID=8.8
	894167-8860		9503-		1	A B C D E F G I J K L M N O P R S T U V W	Z A B C E F G H I J K L M N O P Q R S T	ID=8.6
	909920-2750		9709-		1		T	ID=8.6
73	SPACER; OIL FILTER							
	894332-7461		9503-		1	A B T		

OIL COOLER AND OIL FILTER

0-50 B

FIG-NO.

Applicable models (column letters):

- 4JB1: PY01–PY04 (A–D), PY0 (E), PV01–PV02 (F–G), PW (H–I), PW02–PW09 (J–P), PTQ0/PTQ1 (Q–S), PTB (T), TPK0/TPK1, TPX (U–Y)
- A-4JB1: PAA001–PAA015 (Z–N), PAWA1/PAYA0 (O–R), PAYA1–PAYA2 (S), PYA3 (T)

KEY NO	PART NAME / PART NUMBER	ITC	APPLIED DATE	L R	QTY	4JB1 (ABCDEFGHIJKLMNOPQRSTUVWXY)	A-4JB1 (ZABCDEFGHIJKLMNOPQRSTUVWX)	Remarks
119	GASKET; ADAPTER, OIL COOLER							
	894383-7200		9503-		1	L R T		
241	HOSE; RUBBER, COOLER TO PUMP							
	897022-3140		9503-		1	L		
245	BOLT; CLIP, OIL COOLER HOSE							
	050040-8120		9503-		1	W		M8X12 W/LK WASHER
	050041-0200		9503-		1	W		M10X20 W/LK WASHER
262	BALL; STEEL, BODY, OIL FILTER							
	900097-0110		9503-		1	L RST W		3/8" BALL
265	BODY; OIL FILTER							
	897025-6160		9503-		1	AB		
	894329-6220		9503-		1	DEFGHIJK MNOP	ZABC EFGHIJK MNOPQ S	
	894443-2530		9503-		1		D L	
	894365-4910		9503-		1	R		
292	SPRING; ELEMENT							
	894401-6790		9503-		1	L RST W		
321	GASKET; OIL FILTER TO C/BL —ALSO INCLUDED IN GASKET SET(ENGINE)							
(A)	894425-2980	C	9410-9410		1	ABCD FG IJKLMNO RST W		
(A)	897065-9830		9411-		1	ABCDEFGHIJKLMNOP RSTUVW	ZABC EFGHIJK MNOPQRST	
(B)	894430-9301		9503-		1	AB T		
322	BRACKET; OIL FILTER							
	897165-2840		9503-		1		D L	
328	BOLT; OIL FILTER							
	050040-8450	A	9503-9804		4	AB T		M8X45 W/LK WASHER
	028080-8400		9805-		4	AB T		M8X45
	050140-8300	A	9503-9804		4	CDEFG IJKLMNOP RS W	ZABC EFG QRS	M8X30 W/WASHER
	028680-8300		9805-		4	CDEFGHIJKLMNOP RS UVW	ZABC EFGHIJK MNOPQRS	M8X30
	028080-8600		9709-		2		T	
	028080-8800		9709-		2		T	
	028681-0400		9503-		2		D L	M10X40 FLANGE
	028081-0600		9503-		2		D	M10X60 FLANGE
	028081-0600		9503-		1		L	M10X60 FLANGE
351	PLUG; OIL FILTER							
	894443-2550		9503-		1		D L	
455	HOSE; RUBBER, HD TO OIL COOLER							
	894174-4640		9503-		1	L UV		
476	PIPE; WATER, OIL COOLER TO WATER PUMP							
	894342-1751		9503-		1	RS		
542	COCK; OIL FILTER							
	894443-2540		9503-		1		D L	

0-51	OIL PUMP AND OIL STRAINER
FIG-NO.	

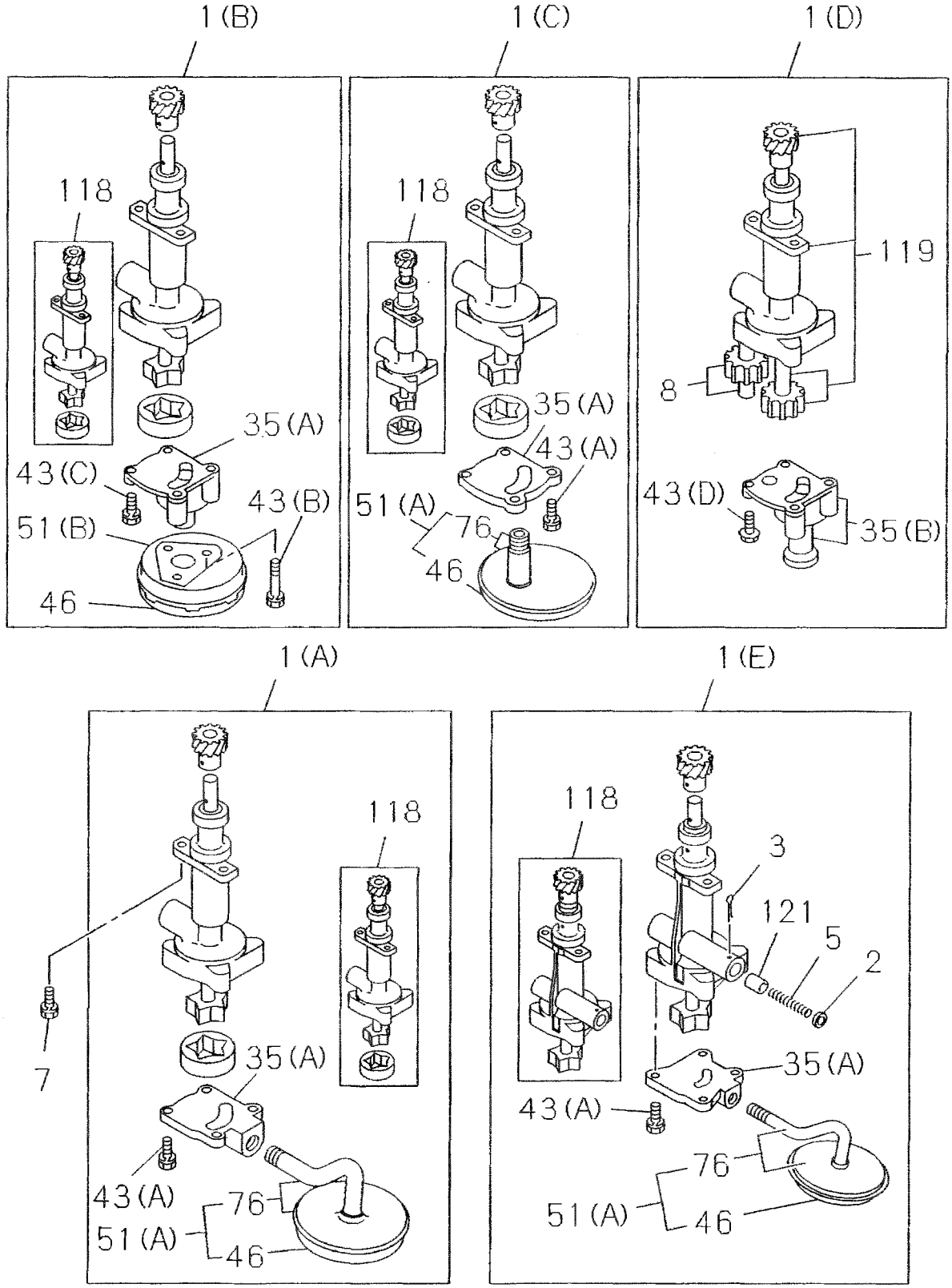

051A0150796

OIL PUMP AND OIL STRAINER

0–51 A
FIG-NO.

Model key (4JB1) — column letter / model code:

Col	A	B	C	D	E	F	G	H	I	J	K	L	M	N	O	P	Q	R	S	T	U	V	W	X	Y
4JB1	PA	PA01	PA02	PA03	PA04	PA05	PA06	PA08	PA09	PA12	PA13	PA13UG	PA14	PA15	PA16	PA17	PA18	PA19	PA20	PA21	PA22	PB	PB02	PB03	

Col	Z	A	B	C	D	E	F	G	H	I	J	K	L	M	N	O	P	Q	R	S	T	U	V	W	X
4JB1	PD	PD01	PF	PH	PK	PK01	PK02	PK03	PK04	PKL	PKL01	PL	PLUG	PL01	PL01UG	PL02	PL02UF	PN	PN01	PN01UG					

KEY NO	PART NAME / PART NUMBER	ITC	APPLIED DATE	LR	QTY	4JB1 (ABCDEFGHIJKLMNOPQRSTUVWXY)	4JB1 (ZABCDEFGHIJKLMNOPQRSTUVWX)	Remarks
1	PUMP ASM; OIL							
(A)	894428-7983	C	9503-9712		1		F	
(A)	894428-7983		9503-		1	AB DE GHIJ KLMNO P RST U	ZA DE KLMNOP	
(A)	894362-9233		9801-		1		F H	
(A)	894362-9233		9503-		1	Q	BC G	
(A)	894142-1573		9503-		1	V		
(A)	894170-1224		9503-		1	WX		
(B)	513100-0613		9503-		1	F	IJ	
(C)	894443-2273		9503-		1	C		
(E)	897065-2321		9503-		1		QRS	
2	SEAT; SPR							
	513165-0040		9503-		1		QRS	
3	PIN; SPLIT							
	908104-0300		9503-		1		QRS	
5	SPRING; COIL							
	897036-8340		9503-		1		QRS	
7	BOLT; COVER.OIL PUMP							
	050140-8250		9503-		2	ABCDEFGHIJKLMNOPQRSTUVWX	ZABCDEFGHIJKLMNOPQRS	M8X25 W/WASHER
35	COVER; OIL PUMP							
(A)	913113-0771		9503-		1	AB DE GHIJ KLMNO PQRST UVWX	ZABCDEFGH KLMNOPQRS	
(A)	894443-5941		9503-		1	C		
(A)	913113-0860		9503-		1	F	IJ	
43	BOLT; CASE							
(A)	901900-8250		9503-		4	ABCDE GHIJ KLMNO PQRST UVWX	ZABCDEFGH KLMNOPQRS	M8X25 W/LK WASHER
(B)	901900-8250		9503-		2	F	IJ	M8X25 W/LK WASHER
(B)	509030-0310		9503-		2	F	IJ	M8X50
(C)	901900-8120		9503-		1	F	IJ	M8X12 W/LK WASHER
46	GAUZE; OIL STRAINER							
	913143-0100		9503-		1	AB DE GHIJ KLMNO PQRST UV	ZABCDEFGH KLMNOPQRS	
	894446-4110		9503-		1	C		
	913143-6031		9503-		1	F	IJ	
51	STRAINER & PIPE ASM; OIL							
(A)	913140-1200		9503-		1	AB DE GHIJ KLMNO PQRST U	ZABCDEFGH KLMNOP	
(A)	513140-0090		9503-		1	C		
(A)	894176-1790		9503-		1	V		
(A)	897044-3490		9503-		1	WX		
(A)	897029-8000		9503-		1		QRS	
(B)	513141-0140		9503-		1	F	IJ	
76	PIPE ASM; OIL							
	894338-0790		9503-		1	AB DE GHIJ KLMNO PQRST U	ZABCDEFGH KLMNOP	
	894446-4080		9503-		1	C		
	894176-1780		9503-		1	V		
	897029-8010		9503-		1		QRS	
118	ROTOR; OIL PUMP							
	897044-1120		9503-		1	ABCDEFGHIJKLMNOPQRSTUVWX	ZABCDEFGHIJKLMNOP	

0-51 A OIL PUMP AND OIL STRAINER

FIG-NO.

KEY. NO	PART NAME / PART NUMBER	ITC	APPLIED DATE	LR	QTY	4JB1 PPPPPPPPPPPPPPPPPPPPPPPPP PPPPPPPPPPPPPPPPPPPPPPP AAAAAAAAAAAAAAAAAAAAABBB DDFHKKKKKKKLLLLLLNNN 0000000011111111122 2 00 0 0000LL U0000 00 12345689233456789012 23 1 1234 0 G1122 11 U 1 U U U G G F G ABCDEFGHIJKLMNOPQRSTUVWXYZABCDEFGHIJKLMNOPQRSTUVWX	Remarks
121	VALVE: RELIEF, OIL PUMP						
	894235-5671		9503-		1	QRS	

OIL PUMP AND OIL STRAINER

FIG-NO. 0-51 B

KEY NO	PART NAME / PART NUMBER	ITC	APPLIED DATE	LR	QTY	4JB1	A-4JB1	Remarks
						PPPPP PPPPP PPPPP P PP T TTT YYYYY VVVWW WWWWW W TT P PPP 0000 00 000000 0 OO B KKX 1234 12 2346789 0 0 1 1	PPPPP PPPPP PPPPP PPPPP P AAAAA AAAAA AAAAA AAYYY Y AAAAA AAAAA AAAAA AWAAA A 0000 00000 11111 10 00 0 1234 56789 01234 51 12 3	
						ABCDE FGHIJ KLMNO PQRST UVWXY	ZABCD EFGHI JKLMN OPQRS TUVWX	
1	PUMP ASM; OIL							
(A)	894362-9233		9503-		1	ABCDE MNO UV	B F NOPQRS T	
(A)	894428-7983		9503-		1	FGHIJKL P W	ZA CDE GHIJKLM	
(A)	894170-1224		9503-		1	T		
(C)	894443-2273		9503-		1	R		
(D)	897011-4801		9503-		1	S		
7	BOLT; COVER, OIL PUMP							
	050140-8250		9503-		2	ABCDE FGHIJ KLMNO P R T UVW	ZABCD EFGHI JKLMN OPQRS T	M8X25 W/WASHER
	050140-8300		9503-		2	S		M8X30 W/WASHER
8	GEAR; DRIVEN, OIL PUMP							
	894384-7781		9503-		1	S		
35	COVER; OIL PUMP							
(A)	913113-0771		9503-		1	ABCDE FGHIJ KLMNO P T UVW	ZABCD EFGHI JKLMN OPQRS T	
(A)	894443-5941		9503-		1	R		
(B)	897017-8100		9503-		1	S		
43	BOLT; CASE							
(A)	901900-8250		9503-		4	ABCDE FGHIJ KLMNO P R T UVW	ZABCD EFGHI JKLMN OPQRS T	M8X25 W/LK WASHER
(D)	028010-8250		9503-		4	S		M8X25 FLANGE
46	GAUZE; OIL STRAINER							
	913143-0100		9503-		1	ABCDE FGHIJ KLMNO P UVW	ZABCD EFGHI JKLMN OPQRS T	
	894446-4110		9503-		1	R		
51	STRAINER & PIPE ASM; OIL							
(A)	913140-1200		9503-		1	FGHIJ KL P UVW	ZA CD E GHI JKLMN OPQ T	
(A)	513140-0090		9503-		1	R		
(A)	897044-3490		9503-		1	T		
76	PIPE ASM; OIL							
	894338-0790		9503-		1	FGHIJ KL P UVW	ZA CD E GHI JKLMN OPQ T	
	894446-4080		9503-		1	R		
118	ROTOR; OIL PUMP							
	897044-1120		9503-		1	ABCDE FGHIJ KLMNO P R T UVW	ZABCD EFGHI JKLMN OPQRS T	
119	PLUG; RELIEF VLV							
	897011-4810		9503-		1	S		

0-52	OIL AND VACUUM PIPING; ENGINE
FIG-NO.	(NO.1)

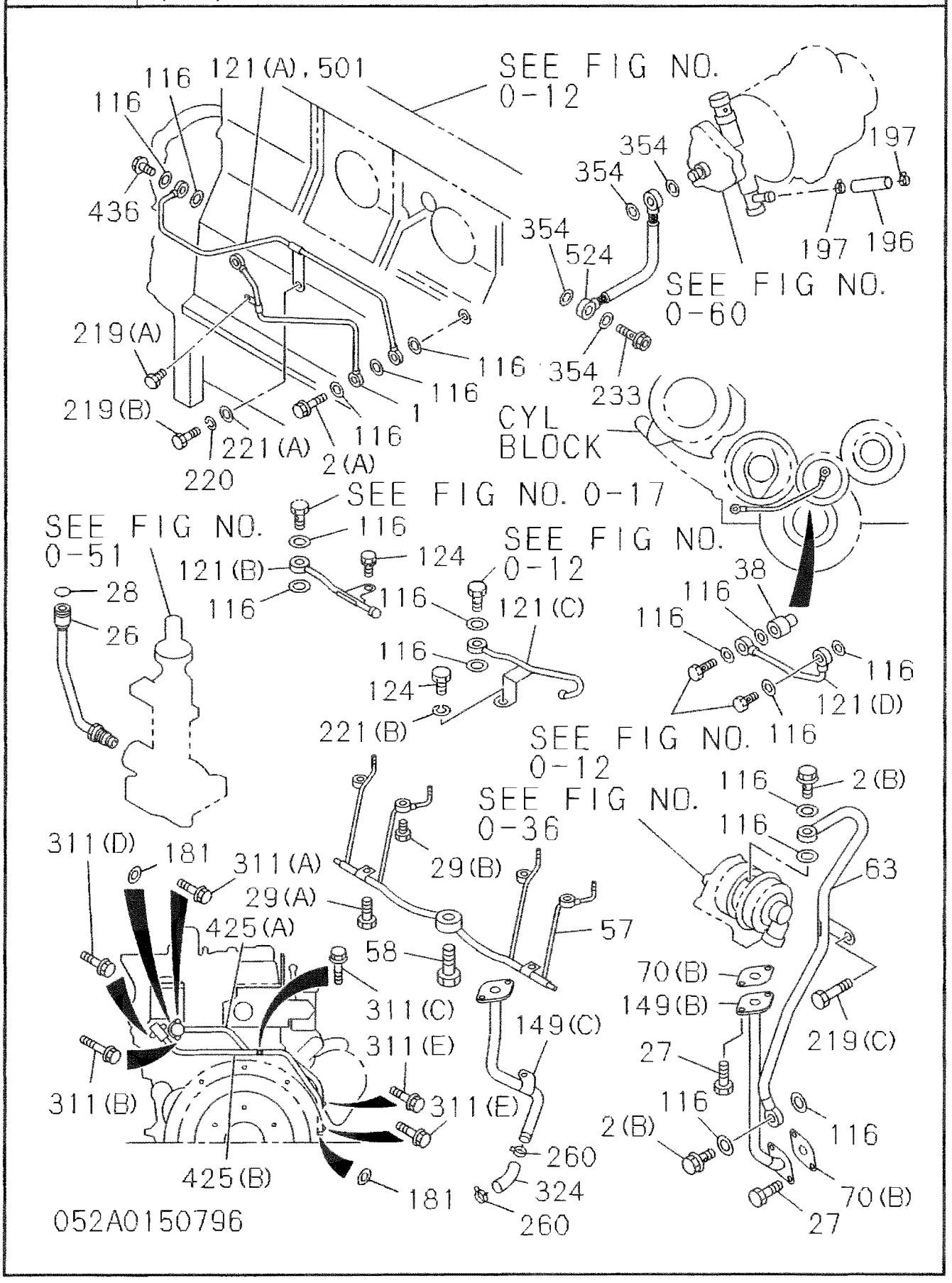

OIL AND VACUUM PIPING; ENGINE

(NO.2)

0-52

FIG-NO.

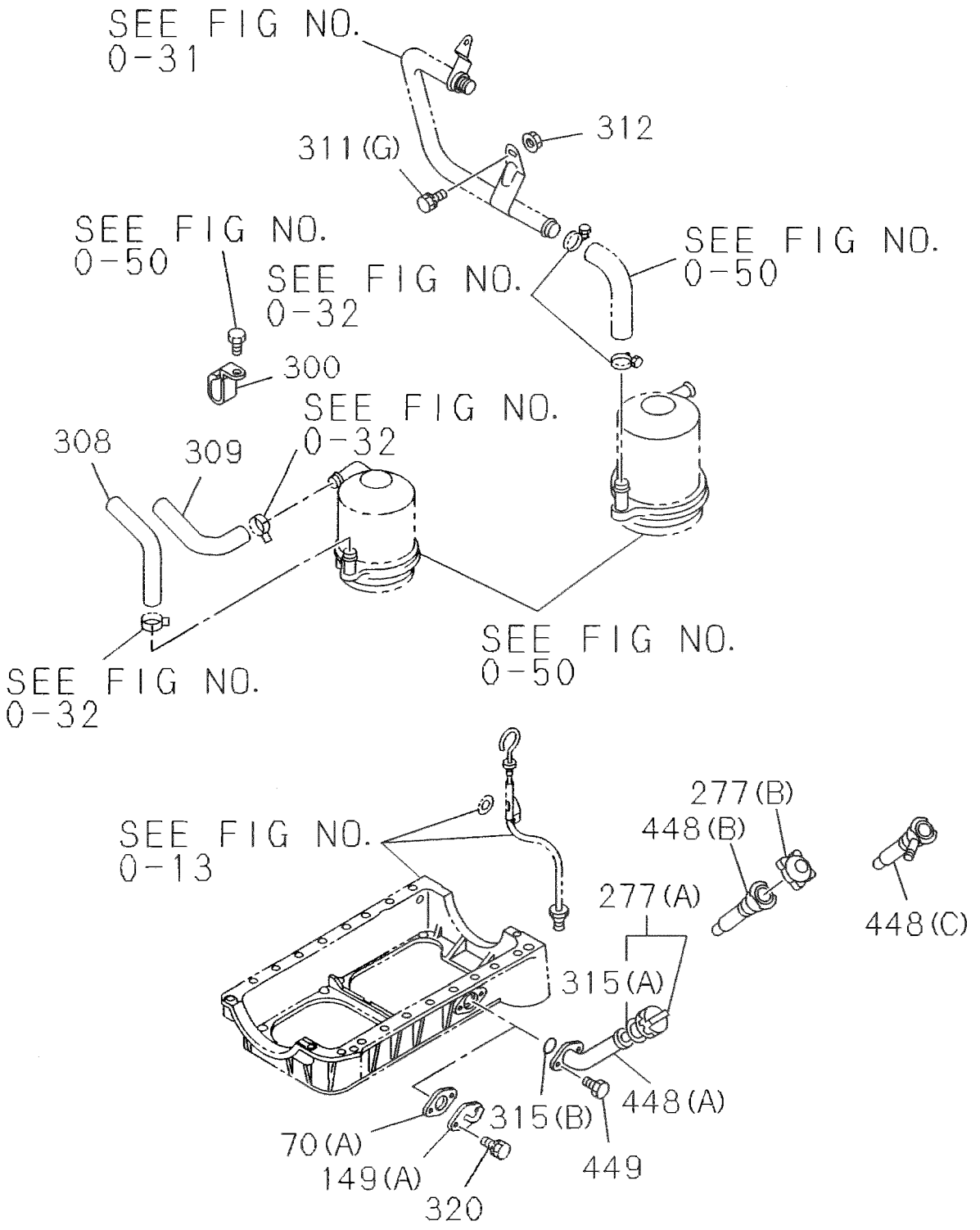

052A0250796

0-52 A	OIL AND VACUUM PIPING; ENGINE
FIG-NO.	

KEY. NO	PART NAME / PART NUMBER	ITC	APPLIED DATE	LR	QTY	4JB1 PA PA01 PA02 PA03 PA04	PA05 PA06 PA08 PA09 PA12	PA13 PA13UG PA14 PA15 PA16	PA17 PA18 PA19 PA20 PA21	PA22 PB PB02 PB03	PD PD01 PF PH PK	PK01 PK02 PK03 PK04 PKL	PKL01 PL PLUG PL01 PL01UG	PL02 PL02UF PN PN01 PN01UG		Remarks
						A B C D E	F G H I J	K L M N O	P Q R S T	U V W X Y	Z A B C D	E F G H I	J K L M N	O P Q R S	T U V W X	
1	PIPE: OIL, INJ PUMP TO C/BL															
	894170-1231		9503-		1	A B C D E	F G H I J	K L M N O	P Q R S T	U	Z A B C		K L M N	O P		
	894129-3310		9503-		1					V						
2	BOLT: EYE, OIL PIPE															
(A)	509675-0181		9503-		1	A B C D E	F G H I J	K L M N O	P Q R S T	U W X	Z A C		K L	O P		M8X20 FLANGE
(A)	894107-7850		9503-		1					V	B		M N			
26	PIPE: OIL, PUMP TO C/BL															
	894434-8271		9503-		1	A B C D E	F G H I J	K L M N O	P Q R S T	U V W X	Z A B C D	E F G H I	J K L M N	O P Q R S		
28	GASKET: OIL PIPE --ALSO INCLUDED IN GASKET SET(ENGINE)															
	509623-0020		9503-		1	A B C D E	F G H I J	K L M N O	P Q R S T	U V W X	Z A B C D	E F G H I	J K L M N	O P Q R S		
38	CONNECTOR: OIL PIPE															
	897123-2950		9502-		1						B		M N			
116	GASKET: CAP NUT, OIL PIPE --ALSO INCLUDED IN GASKET SET(ENGINE)															
	909572-0080		9503-		3						B		M N			ID=8.2 OD=17
	909572-0080		9503-		2	A B C D E	F G H I J	K L M N O	P Q R S T	U V W X	Z A B C		K L M N	O P		ID=8.2 OD=17
	909571-4080		9503-		2	A B C D E	F G H I J	K L M N O	P Q R S T	W X	Z A C D	E F G H I	J K L	O P Q R S		ID=8.2 OD=14.0 T=1.0
	909571-4080		9503-		4						B		M N			ID=8.2 OD=14.0 T=1.0
121	PIPE: OIL, GEAR CASE															
(A)	894129-3290		9503-		1					V						
(B)	894453-5481	C	9405-9605		1	A B C D E	F G H I J	K L M N O	P Q R S T	U	Z A C D	E F G I	J	Q R S		
(B)	897160-7060		9606-		1	A B C D E	F G H I J	K L M N O	P Q R S T	U	Z A C D	E F G H I	J	Q R S		
(C)	894170-1240		9503-		1					W X			K L	O P		
(D)	897113-3361		9503-		1						B		M N			
124	BOLT: OIL PIPE, GEAR CASE															
	050040-8220		9503-		1	A B C D E	F G H I J	K L M N O	P Q R S T	U	Z A C D	E F G H I	J	Q R S		M8X22 W/LK WASHER
	020800-8120		9503-		1					W X			K L	O P		M8X12
196	HOSE: RUBBER, VAC PUMP RETURN															
	002311-4100		9503-		1							I				
197	CLIP: RUBBER HOSE															
	509707-0253	A	9402-9402		2							I				
	897108-1020		9403-		2							I				
219	BOLT: CLIP FIX, OIL PIPE															
(A)	050040-6120		9503-		1	A B C D E	F G H I J	K L M N O	P Q R S T	U V W X	Z A B C		K L M N	O P		M6X12 W/LK WASHER
(A)	020801-0160		9503-		1					V						M10X16
(A)	050040-8200		9503-		1						B		M N			M8X20 W/LK WASHER
(B)	020800-8160		9503-		1						B		M N			M8X16
(B)	050040-8200		9404-		1						B		M N			M8X20 W/LK WASHER
220	WASHER: LK, OIL PIPE															
	909150-5100		9503-		1					V						ID=10.2
	909150-5080		9503-		1						B		M N			ID=8
221	WASHER: PL, CLIP FIX, OIL PIPE															
(A)	909164-7080		9404-		1						B		M N			ID=8 OD=22

OIL AND VACUUM PIPING; ENGINE

0-52 A
FIG-NO.

Applicability columns (4JB1), model codes: PA01–PA04, PA05, PA06, PA08, PA09, PA12, PA13, PA13UG, PA14, PA15, PA16, PA17, PA18, PA19, PA20, PA21, PA22, PB, PB02, PB03, PD, PD01, PF, PH, PK, PK01–PK04, PKL, PL01, PL, PLUG, PL01, PL01UG, PL02, PL02UF, PN, PN01, PN01UG; column letters A B C D E F G H I J K L M N O P Q R S T U V W X Y Z A B C D E F G H I J K L M N O P Q R S T U V W X

KEY. NO	PART NAME / PART NUMBER	ITC	APPLIED DATE	L R	QTY	4JB1	Remarks
221	WASHER; PL, CLIP FIX, OIL PIPE						
(B)	909150-5080		9503-		1	W X · K L · O P	ID=8
233	BOLT; EYE						
	509675-0240		9503-		1	I	M8X24
277	CAP; OIL FILLER						
(A)	511750-0021		9503-		1	V	
(B)	111750-0200		9503-		1	W X · Z A	
311	BOLT; PIPE FIX						
(G)	050040-8140		9503-		1	F · K L	M8X14 W/LK WASHER
312	NUT; PIPE FIX						
	509440-0050		9503-		1	F · K L · D E F G	M8 FLANGE
315	GASKET; OIL FILLER						
(A)	909920-6090		9503-		1	V	
(B)	909920-7080		9503-		1	V	
354	GASKET; EYE BOLT						
	909572-0080		9503-		2	I	ID=8.2 OD=17
	909572-0100		9503-		2	I	ID=10.2 OD=19
436	BOLT; JOINT						
	509675-0321		9503-		1	V · B · M N	
448	FILLER; OIL						
(A)	894130-0190		9503-		1	V	
(B)	894429-9250		9503-		1	W X	
449	BOLT; OIL FILLER						
	050040-8200	A	9503-9804		2	V	M8X20 W/LK WASHER
	028680-8200		9805-		2	V	M8X20
501	PIPE; OIL, PTO FEED						
	894327-5641	C	9503-9608		1	B · M N	
	897139-7130		9609-		1	B · M N	
524	PIPE; OIL, VAC PUMP FEED						
	897037-2482		9503-		1	I	

0-52 B OIL AND VACUUM PIPING; ENGINE

FIG-NO.

KEY NO | PART NAME

KEY NO	PART NUMBER	I T C	APPLIED DATE	L R	QTY	4JB1	A-4JB1	Remarks
						PPPPP PPPPP PPPPP P PPT TTT	PPPPP PPPPP PPPPP PPPPP P	
						YYYYY VVVWW WWWWW W TTP PPP	AAAAA AAAAA AAAAA AAYYY Y	
						0000 00 0 00000 0 QQB KKX	AAAAA AAAAA AAAAA AWAAA A	
						1234 12 2 34678 9 0 0	0000 00000 11111 10 00 0	
						1 1	1234 56789 01234 51 12 3	
						ABCDE FGHIJ KLMNO PQRST UVWXY	ZABCD EFGHI JKLMN OPQRS TUVWX	
1	PIPE: OIL, INJ PUMP TO C/BL							
	894170-1231		9503-		1	ABCDE FGHIJ KLMNO P	ZABCD EFGHI JKLMN OPQRS T	
2	BOLT: EYE, OIL PIPE							
(A)	509675-0181		9503-		1	AB DE FGHIJ KLMNO P	ZABCD EFGHI J LMN OPQ S T	M8X20 FLANGE
(A)	894107-7850		9503-		1	C	R	
(B)	894443-5350		9503-		1	RST UV		
(B)	909906-2761		9503-		1	RST UVW		
26	PIPE: OIL, PUMP TO C/BL							
	894434-8271		9503-		1	ABCDE FGHIJ KLMNO P R T UVW	ZABCD EFGHI JKLMN OPQRS T	
	894434-8281		9503-		1	S		
27	BOLT: OIL PIPE FIX							
	050040-6160		9503-		2	RST UVW		M6X16 W/LK WASHER
	050040-8180		9503-		2	RS UVW		M8X18 W/LK WASHER
28	GASKET: OIL PIPE					--ALSO INCLUDED IN GASKET SET(ENGINE)		
	509623-0020		9503-		1	ABCDE FGHIJ KLMNO P RST UVW	ZABCD EFGHI JKLMN OPQRS T	
29	BOLT: OIL PIPE, OIL JET							
(A)	901910-8120	A	9503-9704		2	RST W		M8X12
(A)	028080-8100		9805-		2	RST UVW		M8X12
(A)	050040-8120	A	9705-9804		2	RST W		M8X12 W/LK WASHER
(B)	050140-6250	C	9409-9409		4	RST W		M6X25 W/WASHER
(B)	028080-6200		9410-		4	RST UVW		M6X20 FLANGE
38	CONNECTOR: OIL PIPE							
	897123-2950		9503-		1	C	K R	
57	PIPE: OIL, OIL JET							
	894469-7091		9503-		1	RST UVW		
58	VALVE: RELIEF, OIL JET, PISTON COOLING							
	894177-1893	A	9503-9603		1	RST W		
	897145-6120		9604-		1	RST UVW		
63	PIPE: OIL, TURBOCHARGER FEED							
	894443-5122		9503-		1	RS UVW		
	897028-9020		9503-		1	T		
70	GASKET: OIL PIPE, TURBOCHARGER							
(A)	894341-8740		9503-		1	CDE		
(B)	894104-5890		9503-		1	RST UVW		
(B)	894341-8740		9503-		1	RS UVW	N T	
116	GASKET: CAP NUT, OIL PIPE					--ALSO INCLUDED IN GASKET SET(ENGINE)		
	909572-0080		9503-		3	C	ZABCD EFG Q S	ID=8.2 OD=17
	909572-0080		9503-		4		R	ID=8.2 OD=17
	909571-4080		9503-		2	AB DE FG IJ KLMNO P RST VW	ZABCD EFG Q S	ID=8.2 OD=14.0 T=1.0
	909571-4100		9503-		2	RST UVW		ID=10.2 OD=16.0
	909571-4140		9503-		2	RST UVW		ID=14.2 OD=20.0
	909571-4080		9503-		4	C	K R	

OIL AND VACUUM PIPING; ENGINE

0-52 B
FIG-NO.

KEY. NO	PART NAME / PART NUMBER	ITC	APPLIED DATE	LR	QTY	4JB1	A-4JB1	Remarks
						PPPPPPPPPPPPPPPP PPTTTT YYYYYVVVWWWWWWWW TTPPPP 0000 00 0000000 00BKKX 1234 12 2346789 0 0 1 1	PPPPPPPPPPPPPPPPPPPPP AAAAAAAAAAAAAAAAAYYYY AAAAAAAAAAAAAAAAWAAAA 000000000111110 000 123456789012345 1 123	
						ABCDEFGHIJKLMNOPQRSTUVWXY	ZABCDEFGHIJKLMNOPQRSTUVWX	
116	GASKET; CAP NUT, OIL PIPE					--ALSO INCLUDED IN GASKET SET(ENGINE)		
	909572-0080		9503-		2	A B C D E F G H I J K L M N O P	Q	ID=8.2 OD=17
	909572-0080		9806-		3		H I J L M N O P T	ID=8.2 OD=17
	909572-0080		9806-		4		K	ID=8.2 OD=17
121	PIPE; OIL, GEAR CASE							
(B)	894139-7471		9404-9404		1	A B D F G I J K L M O W		
(B)	894453-5481	C	9405-9605		1	A B D E F G I J K L M O P W	Z A Q	
(B)	897160-7060		9606-		1	A B D E F G H I J K L M O P U V W	Z A B C D E F G H I J L M N O P Q S T	
(C)	894170-1240		9503-		1	N R S T		
(D)	897113-3361		9503-		1	C	K R	
124	BOLT; OIL PIPE, GEAR CASE							
	050040-8220		9503-		1	A B D E F G H I J K L M O P U V W	Z A B C D E F G H I J L M N O P Q S T	M8X22 W/LK WASHER
	020800-8120		9503-		1	N R S T		M8X12
149	PIPE; OIL RETURN, TURBOCHARGER							
(A)	897081-7450		9503-		1	C D E	N T	
(B)	894343-2892		9503-		1	R S U V W		
(C)	897028-9030		9503-		1	T		
181	GASKET							
	909561-2190		9503-		2		D L	
	909561-2190		9503-		2		D L	
	909572-0080		9806-		2		K	
219	BOLT; CLIP FIX, OIL PIPE							
(A)	050040-6120		9503-		1	A B C D E M N O	Z A B C D E F G H I J K L M N O P Q R S T	M6X12 W/LK WASHER
(A)	050040-8200		9503-		1	C	R	M8X20 W/LK WASHER
(A)	901900-6120		9503-		1	F I J K R		M6X12 W/LK WASHER
(B)	020800-8160		9403-9403		1	C		M8X16
(B)	050040-8200		9404-		1	C	K	M8X20 W/LK WASHER
(C)	050140-8140		9503-		1	R S T U V W		M8X14
220	WASHER; LK, OIL PIPE							
	909150-5080		9403-9403		1	C		ID=8
221	WASHER; PL, CLIP FIX, OIL PIPE							
(A)	909164-7080		9404-		1	C	K R	ID=8 OD=22
(B)	909150-5080		9503-		1	N R S T		ID=8
260	CLIP; HOSE, TURBOCHARGER RETURN							
	894242-0340		9503-		2	T		ID=21
277	CAP; OIL FILLER							
(A)	511750-0021		9503-		1	R S		
(B)	111750-0200		9503-		1	T		
300	CLIP; HOSE, OIL COOLER							
	109701-0180		9503-		1	W		
	897019-0830		9503-		1	W		
308	HOSE; OIL COOLER FEED							
	897040-2890		9503-		1	T		

0-52 B OIL AND VACUUM PIPING; ENGINE

FIG-NO.

KEY. NO	PART NAME / PART NUMBER	I T C	APPLIED DATE	L R	QTY	4JB1 / A-4JB1 (ABCDEFGHIJKLMNOPQRSTUVWXYZABCDEFGHIJKLMNOPQRSTUVWX)	Remarks
308	HOSE: OIL COOLER FEED						
	003216-2200		9503-		1	W	L=220
309	HOSE: OIL COOLER RETURN						
	003216-0900		9503-		1	T U V	L=90
311	BOLT: PIPE FIX						
(A)	028080-8200		9503-		2	D L	M8X20 FLANGE
(B)	028680-8350		9503-		2	D L	M8X35 FLANGE
(C)	028781-0200		9503-		1	D L	M10X20 FLANGE
(D)	028680-8250		9503-		2	D L	M8X25 FLANGE
(E)	028080-8200		9503-		1	D L	M8X20 FLANGE
(F)	028680-8350		9503-		1	D L	M8X35 FLANGE
(G)	050040-8140		9503-		1	L	M8X14 W/LK WASHER
312	NUT: PIPE FIX						
	509440-0050		9503-		1	L U V	M8 FLANGE
315	GASKET: OIL FILLER					--ALSO INCLUDED IN GASKET SET(ENGINE)	
(A)	909920-6090		9503-		1	R S	
(B)	909920-7080		9503-		1	R S	
320	BOLT: OIL PIPE						
	028080-8160		9805-		2	C D E F	M8X20
	050040-8200	A	9503-9804		2	C D E F	M8X20 W/LK WASHER
324	HOSE: RUBBER, OIL RETURN						
	894332-7850		9806-		1	T	
425	PIPE ASM: OIL, COVER TO FILTER						
(A)	897165-2820		9503-		1	D L	
(B)	897165-2830		9503-		1	D L	
436	BOLT: JOINT						
	509675-0321		9503-		1	C K R	
	894107-7850		9206-		1	C K	
448	FILLER: OIL						
(A)	511741-0101		9503-		1	R S	
(C)	894332-7620		9503-		1	T	
449	BOLT: OIL FILLER						
	050040-8200	A	9503-9804		2	R S	M8X20 W/LK WASHER
	028680-8200		9805-		2	R S	M8X20
501	PIPE: OIL, PTO FEED						
	894327-5641	C	9503-9608		1	C R	
	897139-7130		9609-		1	C K R	

MEMO

0-60	ENGINE ELECTRICAL CONTROL PARTS
FIG-NO.	(NO.1)

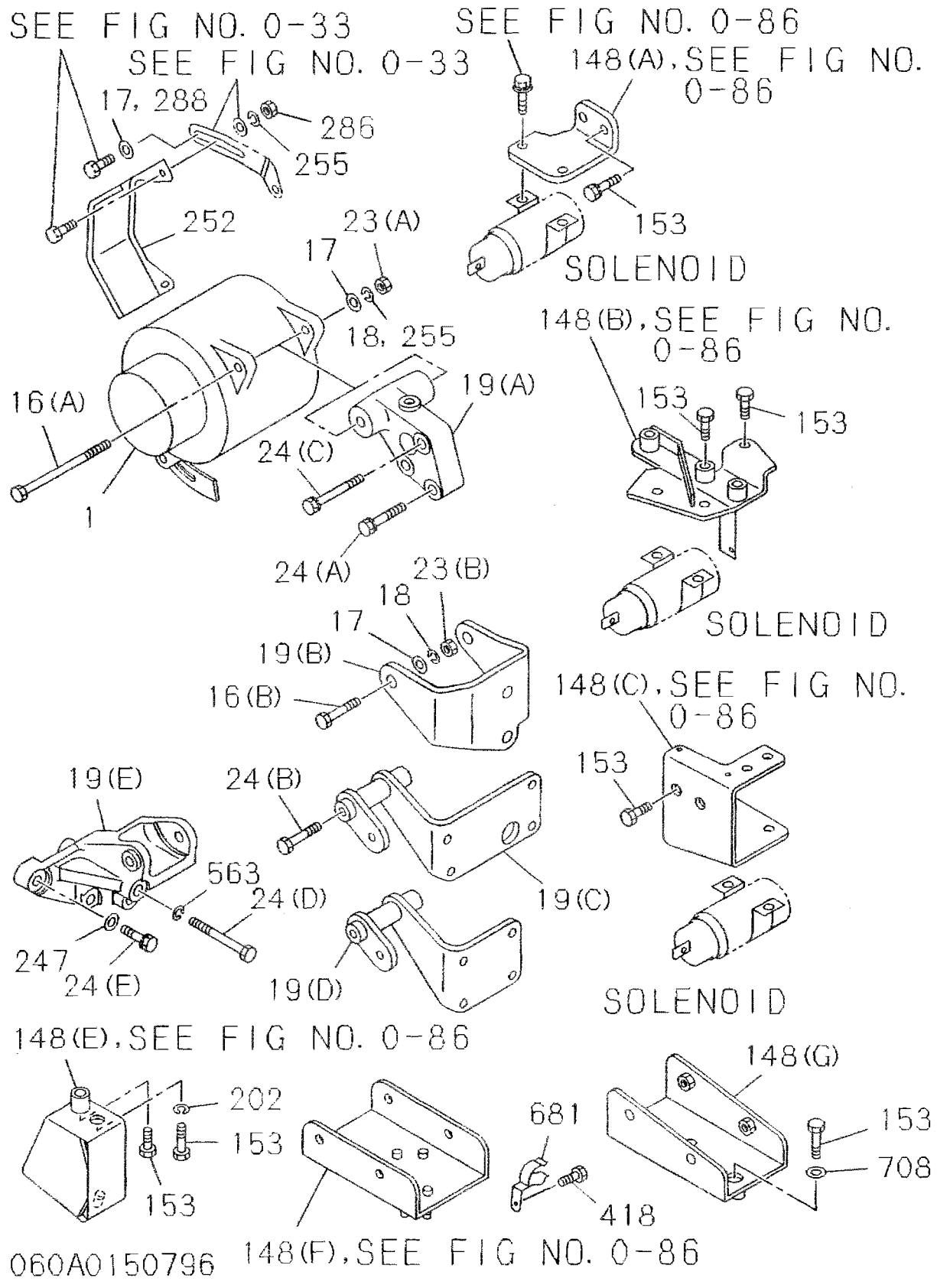

ENGINE ELECTRICAL CONTROL PARTS

(NO.2)

0-60

FIG-NO.

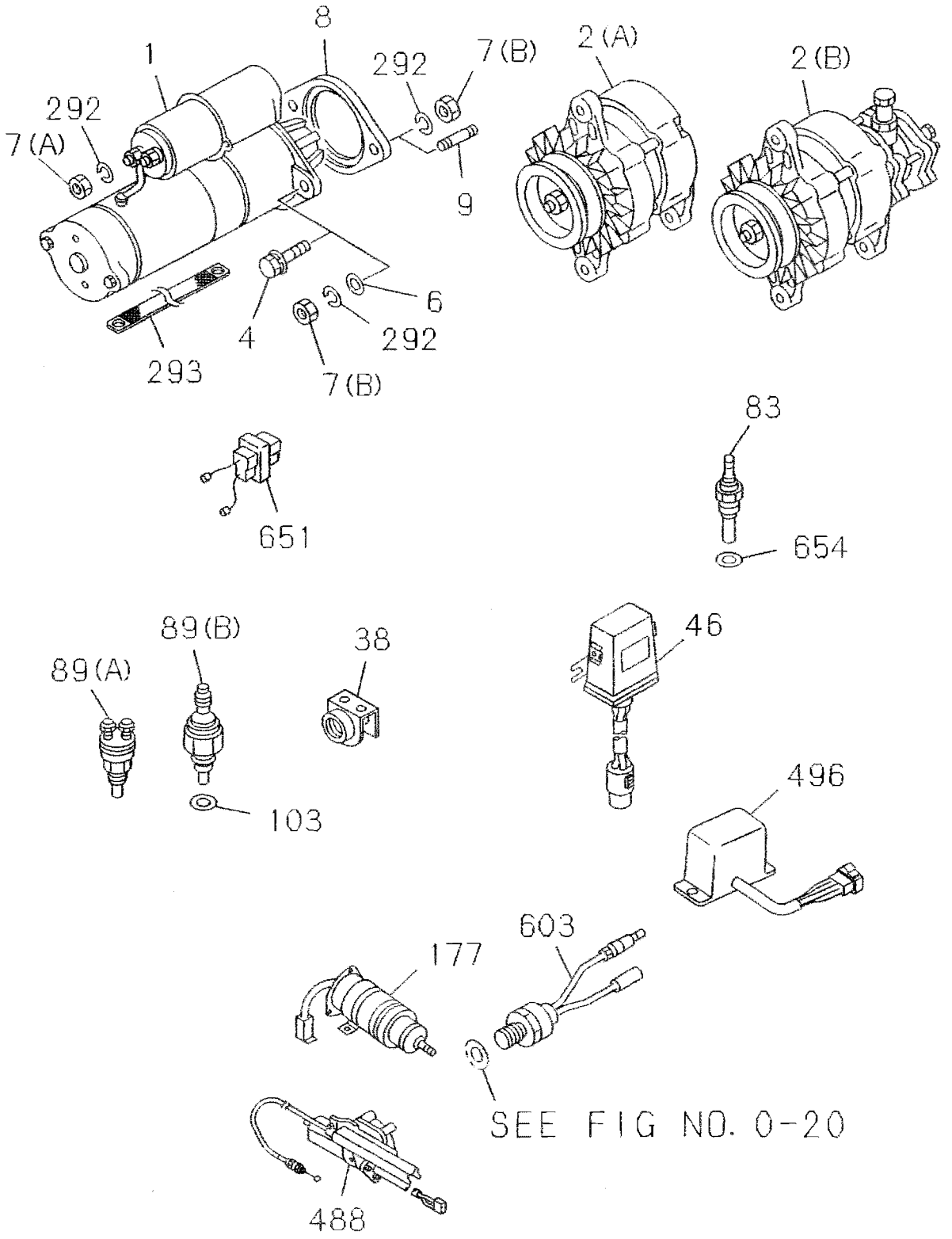

060A0250796

0-60	ENGINE ELECTRICAL CONTROL PARTS
FIG-NO.	(NO.3)

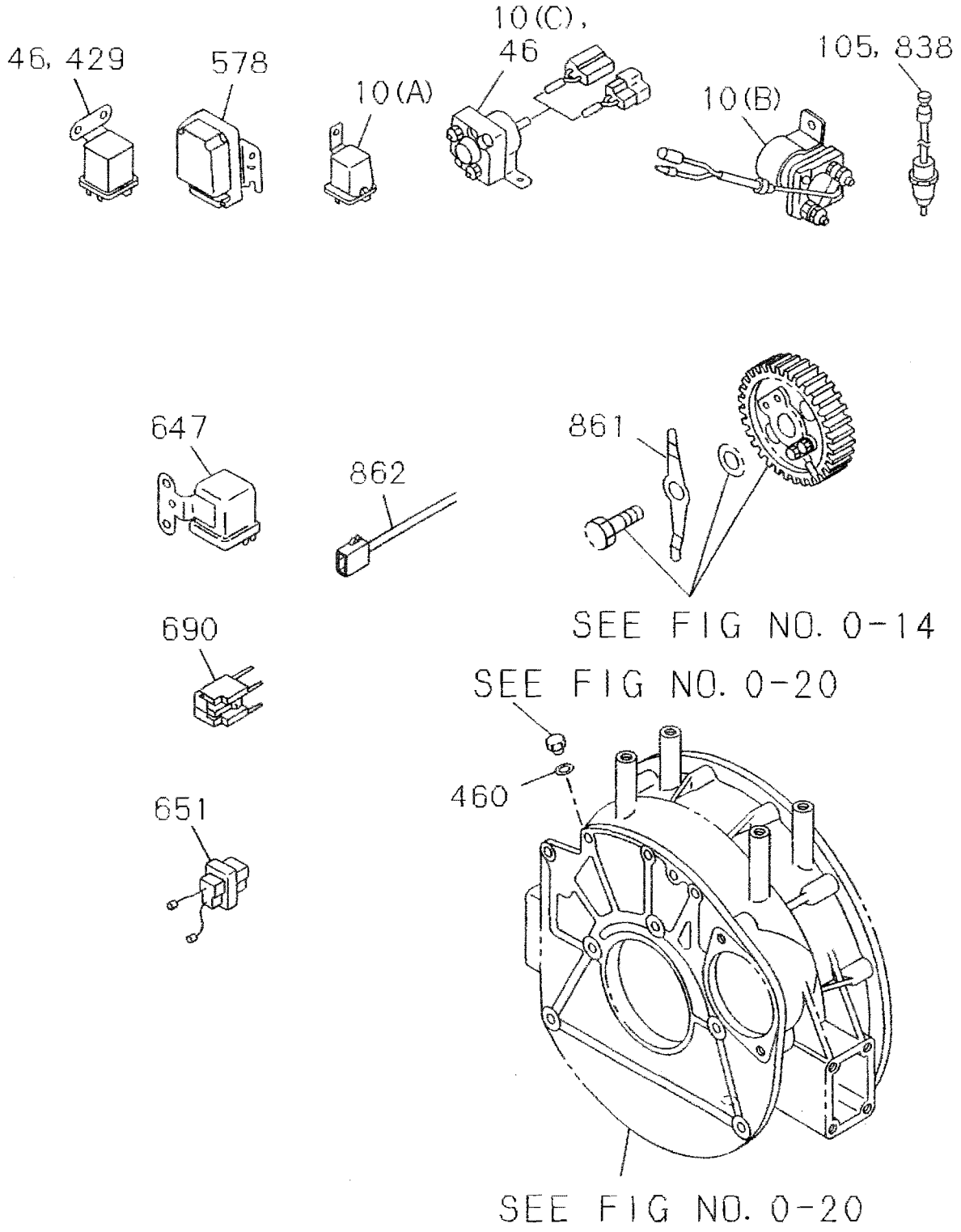

060A0350796

ENGINE ELECTRICAL CONTROL PARTS

0-60 A FIG-NO.

KEY. NO	PART NAME / PART NUMBER	ITC	APPLIED DATE	LR	QTY	4JB1 (A–Y) PPPPPPPPPPPPPPPPPPPPPPPP AAAAAAAAAAAAAAAAAAAAABBB 0000000011111111222 00 1234568923345678901 2 23 U G	4JB1 (Z–X) PPPPPPPPPPPPPPPPPPPP DDFHKKKKKKKLLLLLLNNN 0 0000LL U0000 00 1 1234 0 61122 11 1 U U U G F G	Remarks
1	STARTER ASM					--SEE FIG-NO 0-65 FOR COMPONENT		
	894423-4520		9503-		1	C D E I K L M P R T	Z A C M N	24V-3. 5KW
	894423-4520	C	9406-9406		1		F	24V-3. 5KW
	897084-8770		9407-		1		F	12V-2. 2KW
	897170-4000		9711-		1		H	12V-2. 2KW
	894410-4090	C	9406-9406		1	A B F G H J N O Q S	K L O P Q R S	12V-2. 2KW
	897084-8770		9407-		1	A B F G H J N O Q S U	K L O P Q R S	12V-2. 2KW
	894151-4133		9503-		1	V		12V-2. 2KW
	894171-2963		9503-		1	W X		12V-2. 2KW
	894377-3510		9503-		1		B	24V-3. 5KW
	897042-9972		9503-		1		J	12V-2. 2KW
2	GENERATOR ASM					--SEE FIG-NO 0-66 FOR COMPONENT		
(A)	894423-7560		9503-		1	A B F G H J O Q S U		12V-35A
(A)	581200-3300		9503-		1	C	Z A M N	12V-20A
(A)	894431-5600		9503-		1	D E I R		24V-20A
(A)	581200-2921	A	9503-9605		1	K L		24V-30A
(A)	897022-2112		9606-		1	K L		24V-30A
(A)	894338-8471		9503-		1	M	B C	24V-20A
(A)	581200-3470		9503-		1	N	J	24V-20A
(A)	897023-2631		9503-		1	T		24V-40A
(A)	894153-8821		9503-		1	V	K L O P	12V-35A
(A)	894338-0960		9503-		1	W X		12V-45A
(A)	894417-9240	A	9503-9705		1		F	12V-55A
(A)	581200-3470		9706-		1		F	12V-50A
(A)	897078-4710		9503-		1		Q R S	12V-75A
(B)	897037-6150		9503-		1		I	12V-50A
(A)	581200-3300		9503-9602		1	P		12V-20A
(A)	894423-7560		9603-		1	P		12V-35A
4	BOLT: STARTER							
	050051-2280	A	9503-9804		2	A B C D E F G H I J K L M N O P Q R S T U V W X	Z A B C Q	M12X28
	028781-2300		9805-		2	A B C D E F G H I J K L M N O P Q R S T U V W X	Z A B C Q	M12X28
	028781-2350		9805-		2	F G	H K L	M12X35
	050051-2350	A	9503-9804		2	F G	K L	M12X35 W/LK WASHER
	991056-2850		9503-		2	K L	M N R S	M12X85
	050041-2500		9503-		2		O P	
7	NUT: STARTER							
(A)	909111-4080		9503-		1	A B C D E F G H I J K L M N O P Q R S T U	Z A B C F H K L M N O P Q R S	M8
(B)	999110-4120		9503-		2	K L	M N R S	M12
(B)	999110-5120		9503-		2		F	M12
8	SPACER: STARTER							
	897029-9920		9503-		1	K L	K L M N O P R S	
9	STUD: STARTER							
	994411-2330		9503-		2		F	M12X33 L=51
10	RELAY: STARTER							
(A)	582550-0300		9503-		1		Z A	BLACK
(B)	894403-2470		9503-		1		Q R S	
16	BOLT: GEN							
(A)	909801-2021		9503-		1		F	M8X119

0-60 A ENGINE ELECTRICAL CONTROL PARTS

FIG-NO.

KEY. NO	PART NAME / PART NUMBER	I T C	APPLIED DATE	L R	QTY	ABCDE	FGHIJ	KLMNO	PQRST	UVWXY	ZABCD	EFGHI	JKLMN	OPQRS	TUVWX	Remarks
						4JB1										
						PPPPP AAAAA 0000 1234	PPPPP AAAAA 00001 56892	PPPPP AAAAA 11111 33456 U G	PPPPP AAAAA 11122 78901	PPPP ABBB 2 00 2 23	PPPPP DDFHK 0 1	PPPPP KKKKK 0000L 1234	PPPPP KLLLL L U00 0 G11 1 U G	PPPPP LLNNN 00 00 22 11 U U F G		
16	BOLT; GEN															
(A)	909801-2021	A	9503-9804		1	AB	FG IJ	NO	S	UV	C		JKLM	OPQRS		M8X119
(A)	028085-8120		9805-		1	AB	FG IJ	NO	S	UV	C		JKLM	OPQRS		M8X119
(A)	028085-8120		9805-		1	C			T		BC		MN			
(A)	909801-0341	A	9503-9804		1	C			T		BC		MN			
(A)	909800-9971		9408-9408		1					WX						
(A)	909801-0791	A	9409-9804		1					WX						M8X110
(A)	028085-8110		9805-		1					WX						M8X110
(A)	010806-0000		9503-		1									QRS		M10X100
(A)	909801-3250	A	9503-9804		1							G I				M10X125
(A)	028086-0120		9805-		1							G I				M10X125
(B)	010805-8350	A	9503-9804		2	DE	HI	KLM	PQR		A					M8X35
(B)	028680-8350		9805-		2	DE	HI	KLM	PQR		A					M8X35
17	WASHER; PL. GEN															
	909160-5080		9503-		1	ABC	FG J	NO	ST	UVWX	ZABC	F	JKLMN	OPQRS		ID=8
	909164-6080		9503-		2				T							ID=8 PL WASHER
	909160-5080		9503-		2	DE	HI	KLM	PQR		A					ID=8
18	WASHER; LK. GEN															
	909150-5080		9503-		1	ABC	FG J	NO	ST	UVWX	Z BC	F	JKLMN	OPQRS		ID=8
	909150-8100		9503-		1							I		QRS		ID=10
	909150-5080		9503-		2	DE	HI	KLM	PQR		A					ID=8
19	BRACKET; GEN															
(A)	894132-2490		9503-		1					V						
(A)	894337-8630		9503-		1					WX						
(A)	894170-1360		9503-		1						B		KLMN	OP		
(B)	894423-7450		9503-		1	DE	HI	KLM	PQR		ZA					
(C)	897045-9220		9503-		1							I				
(D)	897089-1640		9503-		1								J			
(E)	897084-2151		9503-		1									QRS		
23	NUT; GEN															
(A)	909110-4080		9503-		1	ABC	FG J	NO	ST	UVWX	Z BC	F	JKLMN	OPQRS		M8
(A)	909110-5100		9503-		1							I		QRS		M10
(B)	909110-4080		9503-		2	DE	HI	KLM	PQR		A					M8
24	BOLT; GEN BRKT															
(A)	050040-8400	A	9503-9804		2					V						M8X40 W/LK WASHER
(A)	028680-8400		9805-		2					V						M8X40
(A)	028680-8350		9805-		2					WX	B		KLMN	OP		M8X35
(A)	050040-8350	A	9503-9804		2					WX	B		KLMN	OP		M8X35 W/LK WASHER
(B)	028681-0250		9805-		1							I				M10X20
(B)	050041-0200	A	9503-9804		1							I				M10X20 W/LK WASHER
(B)	050041-0200	A	9503-9804		4								J			M10X20 W/LK WASHER
(B)	028681-0250		9805-		4								J			M10X20
(C)	050040-8600	A	9503-9804		1					V						M8X60 W/LK WASHER
(C)	109044-0711		9805-		1					V						M8X60
(C)	050040-8500	A	9503-9804		1					WX	B		KLMN	OP		M8X50 W/LK WASHER
(C)	028080-8450		9805-		1					WX	B		KLMN	OP		M8X50
(D)	010806-0000	A	9503-9804		1									QRS		M10X100
(D)	028081-0000		9805-		1									QRS		M10X100

ENGINE ELECTRICAL CONTROL PARTS

0-60 A
FIG-NO.

KEY NO | PART NAME

4JB1 model codes (applicability columns):

	A	B	C	D	E	F	G	H	I	J	K	L	M	N	O	P	Q	R	S	T	U	V	W	X	Y
Code	PA	PA01	PA02	PA03	PA04	PA05	PA06	PA08	PA09	PA12	PA13	PA13UG	PA14	PA15	PA16	PA17	PA18	PA19	PA20	PA21	PA22	PB	PB02	PB03	

	Z	A	B	C	D	E	F	G	H	I	J	K	L	M	N	O	P	Q	R	S	T	U	V	W	X
Code	PD	PD01	PF	PH	PK	PK01	PK02	PK03	PK04	PKL	PKL01	PL	PLUG	PL01	PL01UG	PL02	PL02UF	PN	PN01	PN01UG					

KEY NO	PART NUMBER	ITC	APPLIED DATE	LR	QTY	A–Y	Z–X	Remarks
24	**BOLT: GEN BRKT**							
(E)	050041-0350	A	9503-9804		1		Q R S	M10X35 W/LK WASHER
(E)	028681-0350		9805-		1		Q R S	M10X35
(E)	050041-0450	A	9503-9804		1		Q R S	M10X45 W/LK WASHER
(E)	028081-0400		9805-		1		Q R S	M10X35
38	**RESISTOR: CONT. GLOW PLUG**							
	982530-0460		9503-		1	D E I K L M R	Z A C M N	
	894173-9480		9503-		1	H		
	982530-0460		9503-9602		1	P		
	982530-0410		9603-		1	P		
	894173-9490		9503-		1		B	
	581420-0340		9503-		1		F	
46	**RELAY: GLOW PLUG**							
	894173-1200	A	9503-9509		1	F		
	897117-5920		9510-		1	F		
	894173-1200		9406-9406		1	G		
	897040-5020		9407-		1	G		
	181510-0250		9503-		1	V		
	181510-0290		9503-		1		C	
	897040-5020		9503-		1		J	
	894456-5390	A	9503-9509		1		Q R S	
	897117-5910		9510-		1		Q R S	
	894248-1610		9503-		1	F G Q	J Q R S	
	894248-1610		9503-		2	W X		
83	**THERMOMETER UNIT**							
	582450-0180		9503-		1	B J N O V	Q R S	
	897061-5050		9503-		1	G		
	894426-5661		9503-		1	W X		
89	**SWITCH: OVER HEAT WARNING**							
(A)	582450-0150		9503-		1	D E K L M R T	K L O P	
(A)	894167-9410		9503-		1		Z	
(A)	582450-0090		9503-		1		A	
(B)	582450-0200		9503-		1	F S U	C	
(B)	582450-0141		9503-		1	I Q	F	
(B)	582450-0200	C	9503-9503		1	J N O		
(B)	897125-6000		9504-		1	J N O		
(B)	897125-6010		9503-		1	P		
103	**GASKET: OVER HEAT WARNING SWITCH**							
	909571-3160		9503-		1	I		
105	**SWITCH: THERMO, QOS**							
	894121-1521		9503-		1	F	Q R S	
	894121-1521		9406-9406		1	G		
	897069-7861		9407-		1	G		
	897069-7861		9503-		1		J	
148	**BRACKET: SOLENOID VALVE**							
(A)	894152-9090		9503-		1	V		

0-60 A ENGINE ELECTRICAL CONTROL PARTS

FIG-NO.

KEY NO | PART NAME

4JB1

PPPPPPPPPPPPPPPPPPPPPPPPP PPPPPPPPPPPPPPPPPPPPPPPP
AAAAAAAAAAAAAAAAAAAAABBB DDFHKKKKKKKLLLLLLNNN
0000000011111111222 00 0 0000LL U0000 00
123456892334567890122 23 1 1234 0 G1122 11
U 1 U U U
G G F G

ABCDEFGHIJKLMNOPQRSTUVWXYZABCDEFGHIJKLMNOPQRSTUVWX

KEY NO	PART NUMBER	ITC	APPLIED DATE	LR	QTY	APPLICATION	Remarks
148	BRACKET: SOLENOID VALVE						
(B)	894446-7761		9503-		1	DE I KLM PQRSTU A	
(B)	894324-2210		9503-		1	F	
(B)	894446-7761		9407-		1	G	
(C)	894448-1913		9503-		1	WX	
(E)	894369-4521		9503-		1	B MN	
(F)	894463-4460		9503-		1	Z	
(G)	894463-4470		9503-		1	Z	
153	BOLT: BRKT FIX						
	028681-0400		9805-		1	DEF I KLM PQRSTU A	M10X22 W/LK WASHER
	050041-0220	A	9503-9804		1	DEF I KLM PQRSTU A	M10X22 W/LK WASHER
	050041-0350	A	9503-9804		3	DE G I KLM PQRSTU A	M10X35 W/LK WASHER
	028681-0400		9805-		3	DE G I KLM PQRSTU A	M10X35
	050041-0350	A	9503-9804		2	F	M10X35 W/LK WASHER
	028681-0400		9805-		2	F	M10X35
	050040-8200	A	9503-9804		2	V	M8X20 W/LK WASHER
	028680-8200		9805-		2	V	M8X20
	050051-2250	A	9503-9804		2	WX	M12X25 W/LK WASHER
	028781-2250		9805-		2	WX	M12X25
	020801-4400	A	9503-9804		1	Z	M14X40
	028881-4400		9805-		1	Z	M14X40
	050040-8320	A	9503-9804		1	B MN	M8X32 W/LK WASHER
	028680-8300		9805-		1	B MN	M8X32
	028881-4200		9805-		1	MN	M14X25
	020801-4250	A	9503-9804		1	MN	M14X25
	050140-8250	A	9503-9804		4	Z	M8X25 W/WASHER
	028680-8200		9805-		4	Z	M8X25
177	SOLENOID ASM: ENG STOP						
	181910-0520		9503-		1	DE I KLM R T A N	
	894453-3411		9503-		1	F Q S U	
	894453-3411		9407-		1	G	
	181910-0520		9503-9602		1	P	
	894453-3411		9603-		1	P	
	581910-0201		9503-		1	V	
	894446-6231		9503-		1	WX	
	894462-7351		9503-		1	Z	
	897013-4831		9503-		1	B	
	894453-3410		8606-9210		1	M	
	181910-0520		9211-		1	M	
202	WASHER: LK						
	909150-5140		9503-		1	B MN	ID=14
	909150-5080		9503-		1	MN	ID=8
247	WASHER: PL. BRKT. GEN						
	909164-6100		9503-		1	QRS	ID=10 OD=22
252	COVER: GEN						
	894371-7120		9503-		1	G S A QRS	
255	WASHER: LK. GEN BRKT						
	909150-8100		9503-		1	QRS	ID=10

ENGINE ELECTRICAL CONTROL PARTS

FIG-NO. 0-60 A

KEY NO	PART NAME	PART NUMBER	ITC	APPLIED DATE	LR	QTY	4JB1	Remarks
255	WASHER; LK, GEN BRKT	909150-5080		9503-		1	G S A	ID=8
286	NUT; GEN FAN COVER	909110-4080		9503-		1	G S	M8
288	WASHER; PL, GEN BRKT	909164-6100		9503-		1	F I Q R S	ID=10 OD=22
292	WASHER; LK, STARTER	909150-5080		9503-		1	A B C D E F G H I J K L M N O P Q R S T U Z A B C F H K L M N O P Q R S	ID=8
		909150-5120		9503-		2	K L F M N O P R S	ID=12
293	CABLE; STARTER EARTH	982931-5110		9503-		1	B C D E F G H I J K L M N O P Q R S T U A B C	
418	BOLT; CLIP	050040-6120		9503-		1	W X	M6X12 W/LK WASHER
429	RELAY; HTR	894248-1610		9503-		1	A B J N O	
460	GASKET; PLUG	909571-4200		9711-		1	H	
488	STOPPER; ENG	581900-0350		9503-		1	J N O	
563	WASHER; SPRING	909150-8100		9503-		1	Q R S	ID=10
578	RELAY; CHARGE WARNING	894455-0431		9503-		1	C D E I K	
		894455-0431		9503-9508		1	L	
603	SENSOR; TACHO	894126-8220		9503-		1	V W X	
647	RELAY; HOUR METER	182553-0140	A	9503-9702		1	I C	
		897114-0000		9703-		1	I C	
651	DIODE ASM	181514-0081		9503-		1	M	
654	GASKET; THERMOMETER	909571-3160		9503-		1	B E G J K L N O P V M N Q R S	
681	CLIP; CONNECTOR	894447-9820		9503-		1	W X	
690	CONNECTOR	582690-3380		9503-		1	C D E I C	

0-60 A ENGINE ELECTRICAL CONTROL PARTS

FIG-NO.

KEY. NO — PART NAME

4JB1

```
PPPPPPPPPPPPPPPPPPPPPPPP PPPPPPPPPPPPPPPPPPPPPP
AAAAAAAAAAAAAAAAAAAAABBB DDFHKKKKKKKLLLLLLNNN
 0000000011111111222 00  0   0000LL U0000 00
 1234568923345678901 2 23  1   1234 0 G1122 11
           U                     1   U U  U
           G                         G F  G
ABCDEFGHIJKLMNOPQRSTUVWXYZABCDEFGHIJKLMNOPQRSTUVWX
```

KEY NO	PART NAME / PART NUMBER	ITC	APPLIED DATE	LR	QTY	4JB1	Remarks
708	WASHER; PL.BRKT						
	909164-5140		9503-		1	Z	ID=14
861	PLATE; TACHO SENSOR						
	894334-7700		9503-		1	V W X	

ENGINE ELECTRICAL CONTROL PARTS

0-60 B

FIG-NO.

KEY NO	PART NUMBER	ITC	APPLIED DATE	LR	QTY	4JB1	A-4JB1	Remarks
						PPPPP PPPPP PPPPP P PPT TTT / YYYYY VVVWW WWWWW W TTP PPP / 0000 00 0000000 00B KKX / 1234 12 2346789 0 0 / 1 1	PPPPP PPPPP PPPPP PPPPP P / AAAAA AAAAA AAAAA AAYYY Y / AAAAA AAAAA AAAAA AWAAA A / 0000 00000 11111 10 000 / 1234 56789 01234 51 123	
						A B C D E F G H I J K L M N O P Q R S T U V W X Y	Z A B C D E F G H I J K L M N O P Q R S T U V W X	
1	STARTER ASM						--SEE FIG-NO 0-65 FOR COMPONENT.	
	894423-4520		9503-		1	A B C D E	Z Q R S	24V-3.5KW
	894410-4090	C	9406-9406		1	F G I J K L M N O R S W		12V-2.2KW
	897084-8770		9407-		1	F G H I J K L M N O P R S U W	A C E F J K M N O P	12V-2.2KW
	894171-2963		9503-		1	T		12V-2.2KW
	897170-4000		9712-		1	V		12V-2.2KW
	897137-4781		9503-		1		B D G H I L T	24V-3.2KW
2	GENERATOR ASM						--SEE FIG-NO 0-66 FOR COMPONENT.	
(A)	894338-8471		9503-		1	A D	Z Q	24V-20A
(A)	897023-2631		9503-		1	B C E	D L R S	24V-40A
(A)	894423-7560		9503-		1	F G H I J M O P	A C E J K O P	12V-35A
(A)	897143-3290		9503-		1		B G	24V-20A
(A)	581200-3300		9805-		1		H X	24V-20A
(A)	581200-3470		9503-		1	L U	M N	12V-50A
(A)	581200-3470		9805-		1		F	12V-50A
(A)	897182-2890		9805-		1		T	12V-30A
(A)	894338-0960		9503-		1	N R S T		12V-45A
(A)	894431-5600		9805-		1		I X	24V-20A
(A)	897182-2890		9710-		1		T	24V-30A
4	BOLT; STARTER							
	050051-2280	A	9503-9804		2	A B C D E F G I J K L M O P T W	Z C E Q R S	M12X28
	028781-2300		9805-		2	A B C D E F G I J K L M O P T W	Z C E P Q R S	M12X28
	050051-2350	A	9503-9804		2	N R S	A B D F G	M12X35
	028781-2350		9805-		2	N R S V	A B D F G	M12X35
	028181-2450		9805-		2		K	
6	WASHER; PL, STARTER							
	909160-5120		9805-		2		K	
7	NUT; STARTER							
(B)	999110-5120		9711-		2	U	K	M12X35
(A)	909111-4080		9503-		1	A B C D E F G H I J K L M N O P R S U V W	Z A B C D E F G H I J K L M N O P Q R S T	M8
8	SPACER; STARTER							
	897045-7830		9805-		2		K	
9	STUD; STARTER							
	994411-2330		9711-		1	U		
10	RELAY; STARTER							
(C)	582553-0454		9503-		1	G		
16	BOLT; GEN							
(A)	909801-2021	A	9503-9804		1	F G I J L M O P	A E F	M8X119
(A)	028085-8120		9805-		1	F G I J L M O P U	A E F	M8X119
(A)	909801-2021		9503-9508		1	A B C D		M8X119
(A)	909801-0341	A	9509-9804		1	A B C D E		
(A)	028085-8120		9805-		1	A B C D E H	H J K L M N O T	
(A)	909800-9971		9408-9408		1	N R S T		
(A)	909801-0791	A	9503-9804		1	N R S T		M8X110
(A)	028085-8110		9805-		1	N R S T		M8X110

0-60 B ENGINE ELECTRICAL CONTROL PARTS

FIG-NO.

KEY NO	PART NAME / PART NUMBER	ITC	APPLIED DATE	L/R	QTY	4JB1 (A–Y)	A-4JB1 (Z, A–X)	Remarks
16	BOLT; GEN							
(A)	028085-8120		9805-		1		Z B D F N Q R S	
(A)	909801-0341	A	9503-9804		1		Z B D F Q R S	
(A)	010805-8350		9503-		2		C G I P	M8X35
17	WASHER; PL. GEN							
	909160-5080		9503-		1	A D F G I J L M O P	Z A B D E F Q	ID=8
	909160-5080		9503-9503		1	B C		ID=8
	909164-6080		9504-		2	B C E		ID=8 PL WASHER
	909160-5080		9409-		1	N T U	H J K L M N O T	ID=8
	909160-5080		9503-		2		C G I R	ID=8
	909160-6080		9503-		2		S	ID=8
18	WASHER; LK. GEN							
	909150-5080		9503-		1	A B C D E F G H I J L M N O P R S T U	Z A B D E F H K L M N Q R S T	ID=8
	909150-5080		9503-		2		C G I J O P	ID=8
19	BRACKET; GEN							
(A)	894170-1360		9503-		1	C	K R	
(A)	894337-8630		9503-		1	N R S T		
(A)	894423-7450		9503-		1	F G H I L O P	C G I P	
23	NUT; GEN							
(A)	909110-4080		9503-		1	A B C D E F G H I J L M N O P R S T	Z A B D E F H K L M N Q R S T	M8
(A)	909110-4080		9503-		2		C G I J O P	M8
24	BOLT; GEN BRKT							
(A)	050040-8350	A	9503-9804		2	C N R S T		M8X35 W/LK WASHER
(A)	028680-8350		9805-		2	C N R S T		M8X35
(A)	050040-8350		9503-		2		K R	M8X35 W/LK WASHER
(C)	050040-8500	A	9503-9804		1	C N R S T		M8X50 W/LK WASHER
(C)	028080-8500		9805-		1	C N R S T		M8X50
(C)	509000-0841		9503-		1		K R	M8X55 W/LK WASHER
38	RESISTOR; CONT. GLOW PLUG							
	982530-0410		9503		1	F G H I J K L M N O P R S W	J O P	
	894173-9480		9503-		1		C K	
	982530-0460		9503-		1		F G H N	
	982530-0460		9503-9710		1		E	
	982530-0410		9711-		1	U V	E	
46	RELAY; GLOW PLUG							
	897040-5020		9503-		1		A M	
	897046-2820		9503-		1		B	
	894423-3140		9503-		1	A B C D E	Q R S T	
	894248-1610		9503-		1	T	A M	
	894248-1610		9503-		2	T		
	894258-0140		9503-		1		B D L	
	582553-0444		9503-		1	G		
83	THERMOMETER UNIT							
	983151-4320		9503-		1	G H	E G	
	894426-5661		9503-		1	T		

ENGINE ELECTRICAL CONTROL PARTS

0-60 B

FIG-NO.

KEY. NO	PART NAME / PART NUMBER	I T C	APPLIED DATE	L R	QTY	4JB1 (ABCDEFGHIJKLMNOPQRSTUVWXY)	A-4JB1 (ZABCDEFGHIJKLMNOPQRSTUVWX)	Remarks
83	THERMOMETER UNIT							
	897061-5050		9503-		1		A M	
89	SWITCH; OVER HEAT WARNING							
(A)	582450-0150		9503-		1	J M N O		
(A)	894167-9400		9503-		1	J		
(A)	582450-0130		9503-		1	G		
(B)	897125-6000		9407-		1	H	B D E F J L N O T	
(B)	582450-0141		9503-		1	L P R S		
(B)	897125-6010		9503-		1	U	I	
148	BRACKET; SOLENOID VALVE							
(B)	894446-7761		9503-		1	J M O P	Z A E M	
(C)	894448-1913		9503-		1	T		
(D)	897177-5160		9503-		1		D G H I J L O	
(E)	894369-4521		9503-		1	N		
153	BOLT; BRKT FIX							
	050041-0220	A	9503-9804		1	J M O P	Z A E	M10X22 W/LK WASHER
	028681-0220		9805-		1	J M O P	Z A E	M10X22
	050041-0350	A	9503-9804		3	J M O P	Z A E	M10X35 W/LK WASHER
	028681-0400		9805-		3	J M O P	Z A E M	M10X35
	028681-0400		9805-		2		H I J L O	M10X35
	028680-8300		9805-		1	N		M8X32
	050040-8320	A	9503-9804		1	N		M8X32 W/LK WASHER
	020801-4250	A	9503-9804		1	N		M14X25
	028881-4200		9805-		1	N		M14X25
	050051-2250	A	9503-9804		2	T		M12X25 W/LK WASHER
	028781-2250		9805-		2	T		M12X25
	050041-0350		9503-		2		D G	M10X35 W/LK WASHER
	028681-0200		9503-		1		M	M10X35
177	SOLENOID ASM; ENG STOP							
	894453-3411		9503-		1	J M N O P	Z A E J M O	
	181910-0520		9503-		1		D G H I L	
202	WASHER; LK							
	909150-5140		9503-		1	N		ID=14
252	COVER; GEN							
	894371-7120		9503-		1		A J M	
292	WASHER; LK, STARTER							
	909150-5080		9503-		1	A B C D E F G H I J K L M N O P R S U V W	Z A B C D E F G H I J K L M N O P Q R S T	ID=8
	909150-5120		9711-		2	U		
293	CABLE; STARTER EARTH							
	982931-5110		9503-		1	A B C D E R S	Z A C D E F G H J L M N O Q R S	
	897180-5560		9805-		1		I K T	
460	GASKET; PLUG							
	909571-4200		9503-		1	F G H I J K M N P V W	P	ID=20.5 OD=28.0
488	STOPPER; ENG							
	531900-0071		9503-		1	G H		

0-60 B ENGINE ELECTRICAL CONTROL PARTS

FIG-NO.

KEY. NO	PART NAME / PART NUMBER	ITC	APPLIED DATE	LR	QTY	4JB1 (ABCDEFGHIJKLMNOPQRSTUVWXY)	A-4JB1 (ZABCDEFGHIJKLMNOPQRSTUVWX)	Remarks
496	TIMER ASM: GEN							
	894137-5330		9503-		1	J		
	181910-0240		9503-		1		G I	
838	SENSOR: THERMO.QOS							
	897069-7861		9503-		1		A F M N	
	897117-1860		9503-		1		B	
862	CONNECTOR: GEN							
	894371-5560		9503-		1	L		

MEMO

0-61	BATTERY AND BATTERY CABLE
FIG-NO.	

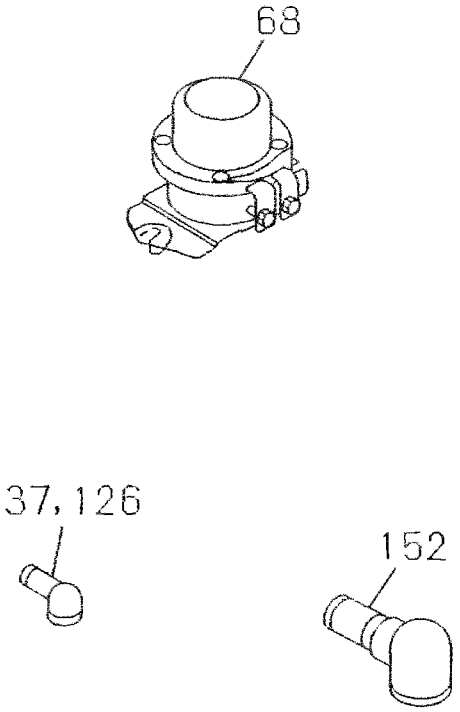

061A0150796

BATTERY AND BATTERY CABLE

0-61 A

FIG-NO.

Engine model: 4JB1

Applicability code columns (as printed in header):

```
PPPPP PPPPP PPPPP PPPPP PPPP  PPPPP PPPPP PPPPP PPPPP
AAAAA AAAAA AAAAA AAAAA ABBB  DDFHK KKKKK KLLLL LLNNN
 0000 00001 11111 11122 2 00   0    0000L L U00 00 00
 1234 56892 33456 78901 2 23   1    1234  0 G11 22 11
              U                       1   U U U
              G                           G F G
ABCDE FGHIJ KLMNO PQRST UVWXY ZABCD EFGHI JKLMN OPQRS TUVWX
```

KEY NO	PART NAME / PART NUMBER	ITC	APPLIED DATE	LR	QTY	ABCDE	FGHIJ	KLMNO	PQRST	UVWXY	ZABCD	EFGHI	JKLMN	OPQRS	TUVWX	Remarks
37	CAP; TERMINAL, BATTERY CABLE															
	982951-3250		9503-		3	ABCDE	IJ	KL NO	P RS	U						
	982951-3240		9503-		2	ABCDE	IJ	KL NO	P RS	U						
68	RELAY; BATTERY															
	182550-1120		9503-		1	B	J	NO	P							
	182550-1090		9503-		1			KL			C					
	894379-5430		9503-		1			M								
126	CAP; TERMINAL, AC GEN															
	982951-3250		9503-		1		H						KLMN	OP		
152	CAP; TERMINAL, STARTER															
	982951-3320		9503-		1	ABCDE	HIJ	KL NO	P RS	U			KLMN	OP		

0-61 B BATTERY AND BATTERY CABLE

FIG-NO.

KEY NO	PART NAME	PART NUMBER	ITC	APPLIED DATE	LR	QTY	4JB1 PPPPPPPPPPPPPPPPPPPPPPPPPPPPPPPPPPPPPPPPPPPPPPPP YYYYVVVWWWWWWWWWTTTTTTTTTTTTTTTTTTTTTTTTTTTTTTTTTTTTTTTT 0000 00 0000000000 00BKKX 1234 12 2346789 0 0 1 1 ABCDEFGHIJKLMNOPQRSTUVWXY	A-4JB1 PPPPPPPPPPPPPPPPPPPPPPPPPPPPPPPPPPPPPPPPPPPPPPPP AAAAAAAAAAAAAAAAAAAAAAAAAAAAAAAAAAAAAAAAAAAAAAAA AAAAAAAAAAAAAAAAAAAAAAAAAAAAAAAAAAAAAAAAAAAAAAAA 0000000001111110 000 1234567890123451 123 ZABCDEFGHIJKLMNOPQRSTUVWX	Remarks
37	CAP; TERMINAL, BATTERY CABLE								
		982951-3240		9503-		2	AB G IJKLM OP	D E GHI L P	
		982951-3250		9503-		3	AB G IJKLM OP	E GHI P	
		982951-3250		9503-		5	C	R	
		982951-3250		9503-		4	DE	D L Q S	
68	RELAY; BATTERY								
		894379-5430		9503-		1		B	
126	CAP; TERMINAL, AC GEN								
		982951-3250		9503-		1		C K	
152	CAP; TERMINAL, STARTER								
		982951-3320		9503-		1	AB G IJKLM OP	C E GHI K P	
		982951-3330		9607-		3		L	

MEMO

0-65	STARTER
FIG-NO.	(NO.1)

ASM
8-94151-413-*

KEY	MARK
1	*

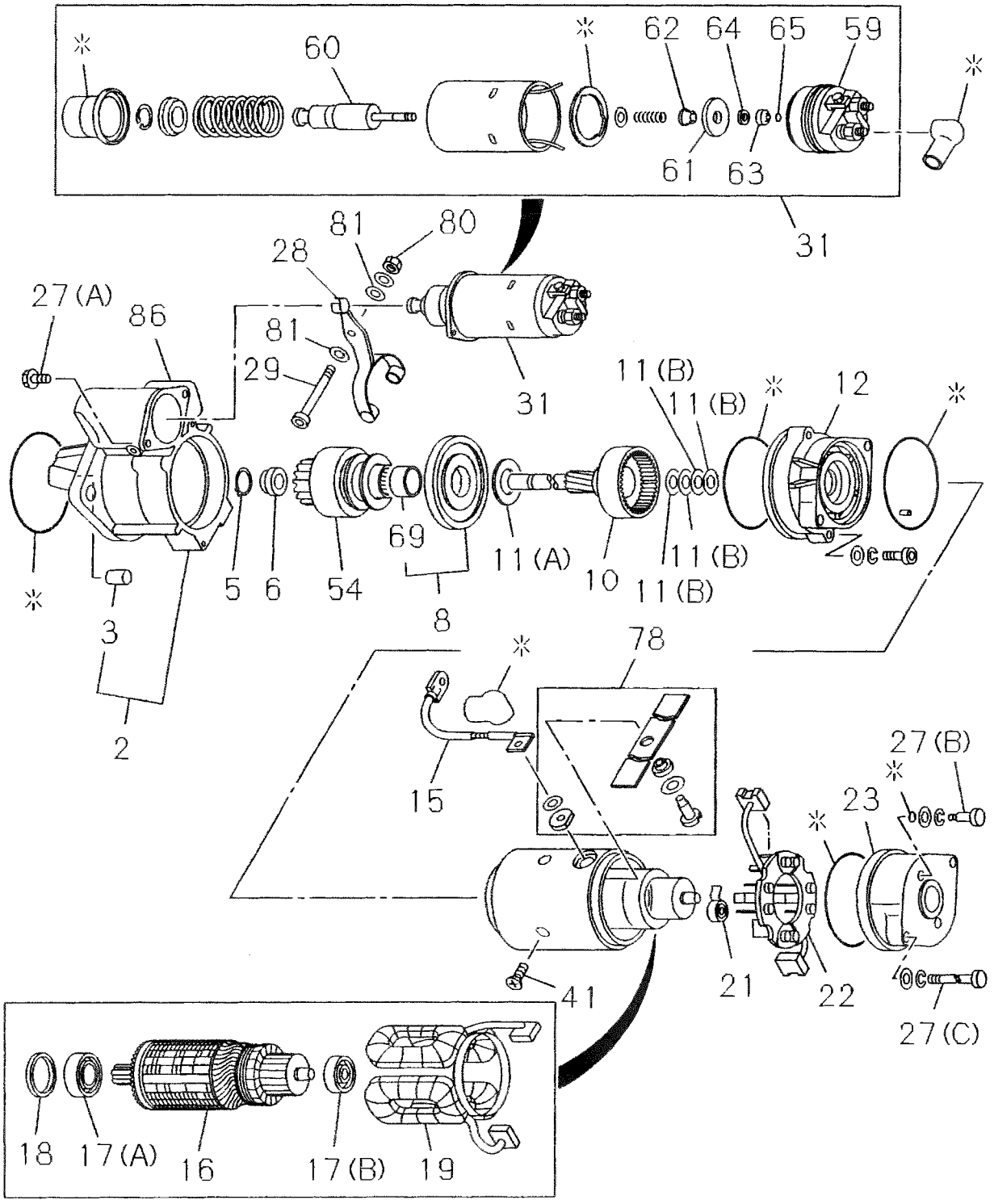

065A0150796

STARTER

(NO.2)

0-65

FIG-NO.

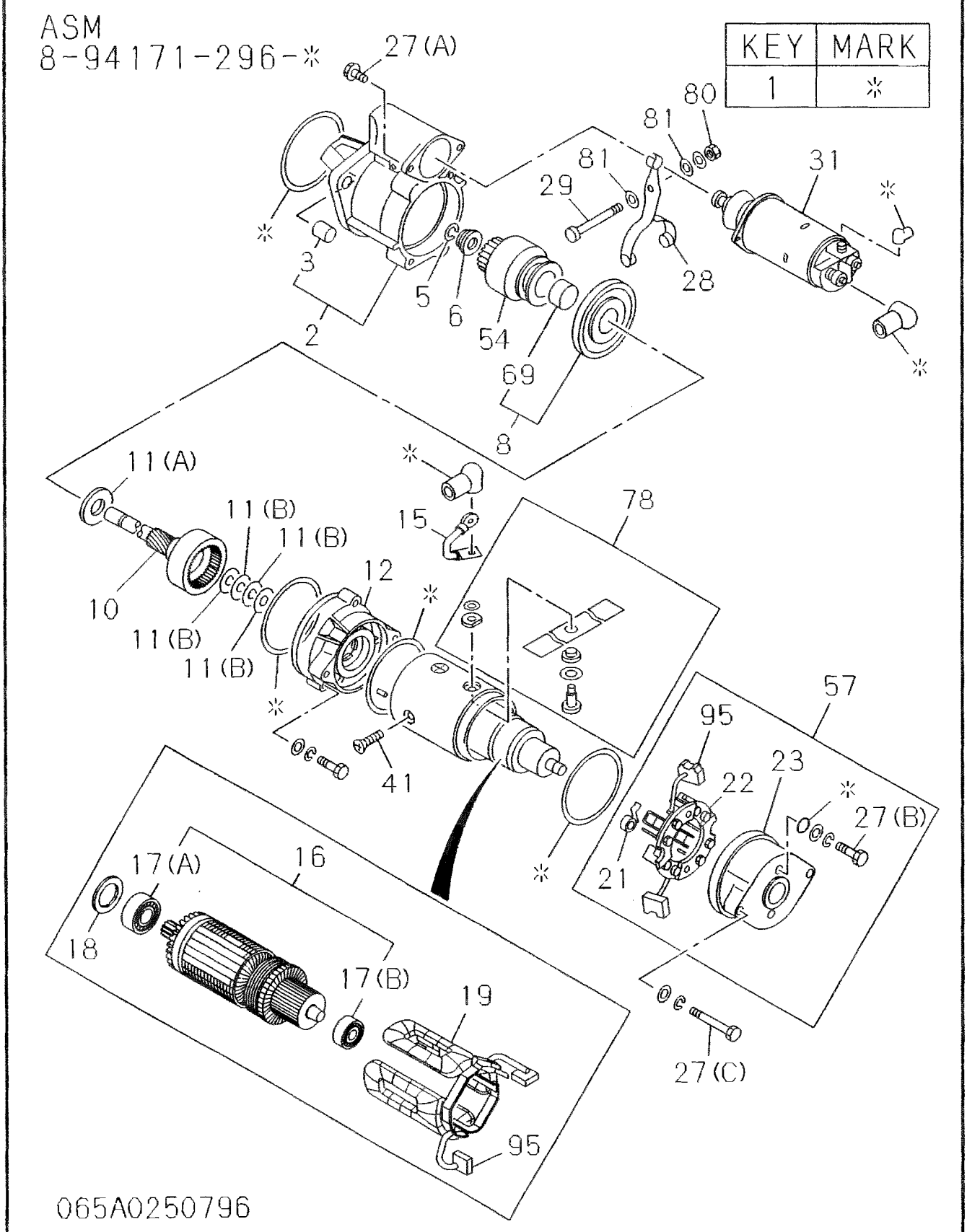

KEY	MARK
1	*

0-65	STARTER
FIG-NO.	(NO.3)

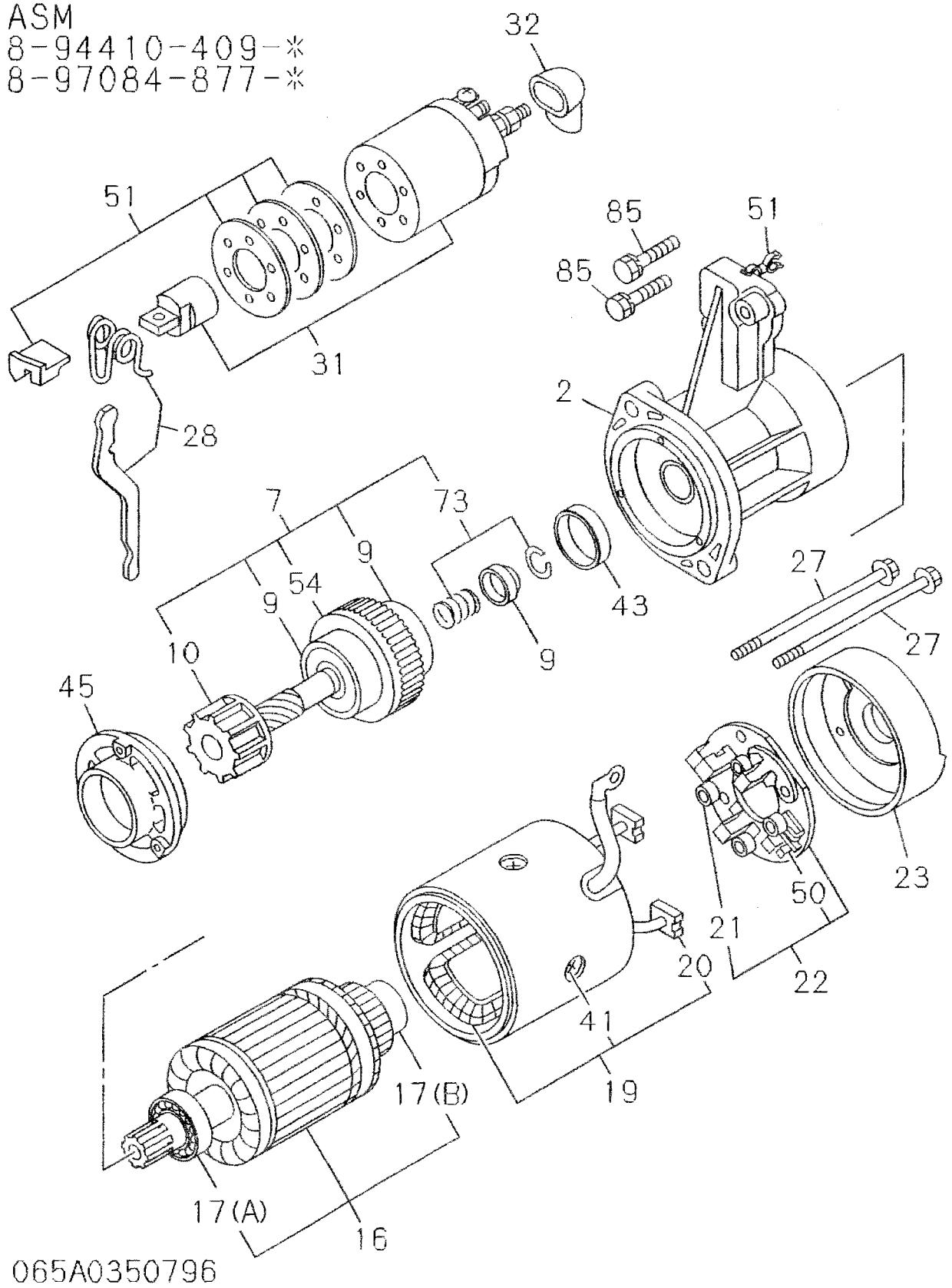

STARTER

(NO.4)

0-65

FIG-NO.

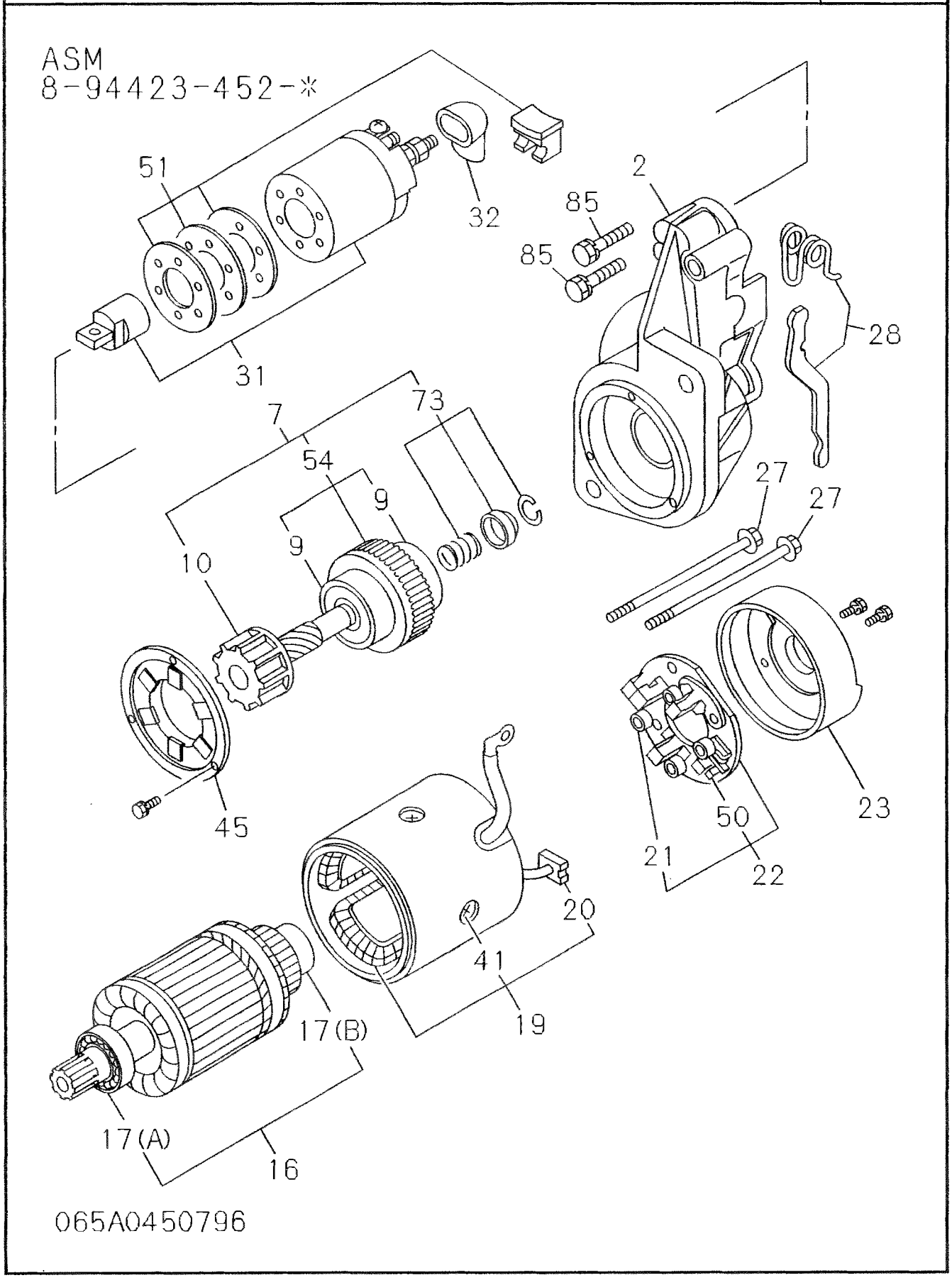

0-65	STARTER
FIG-NO.	(NO.5)

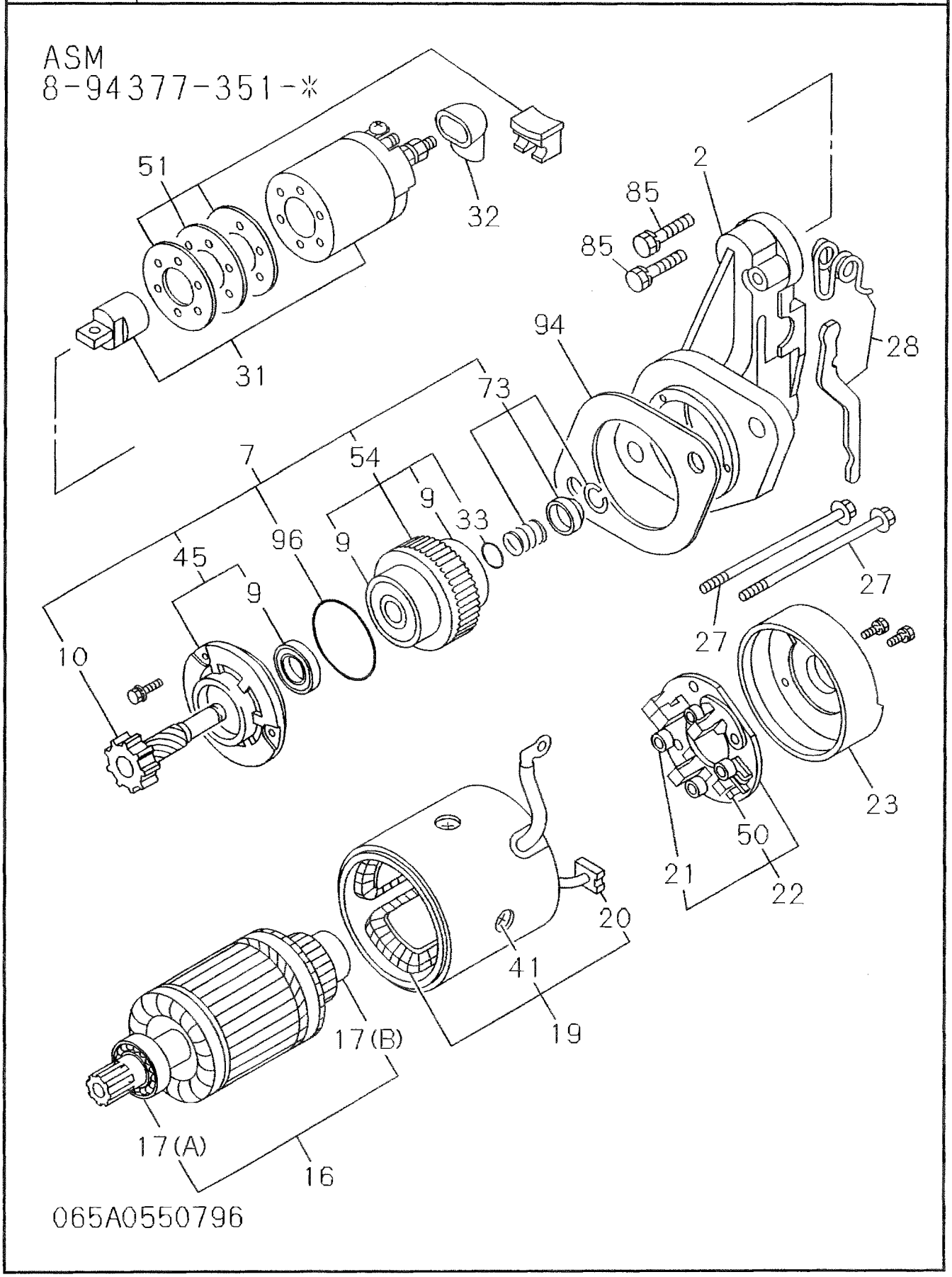

STARTER

(NO.6)

0-65

FIG-NO.

ASM
8-97137-478-*

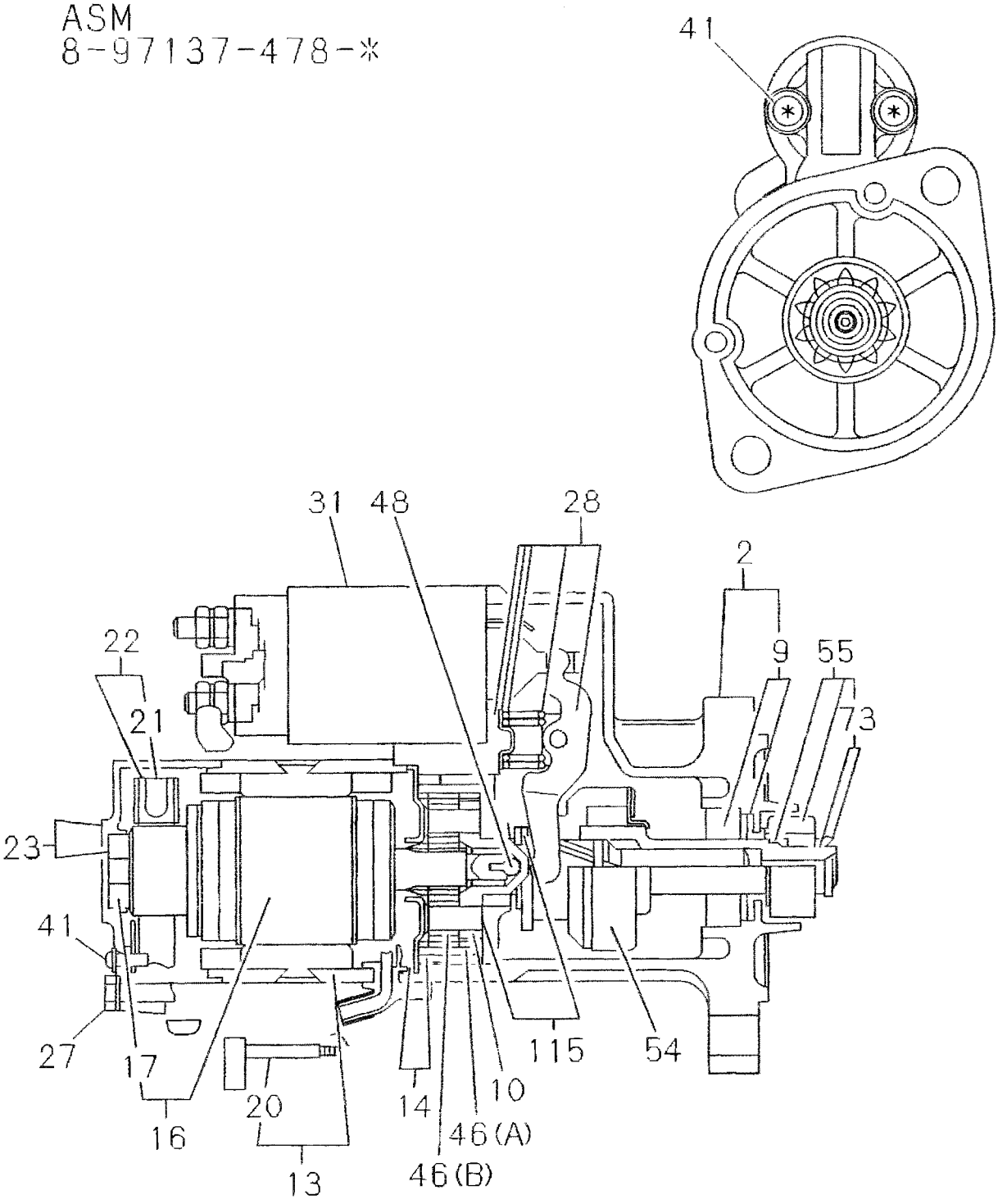

065A0650796

0-65	STARTER
FIG-NO.	(NO.7)

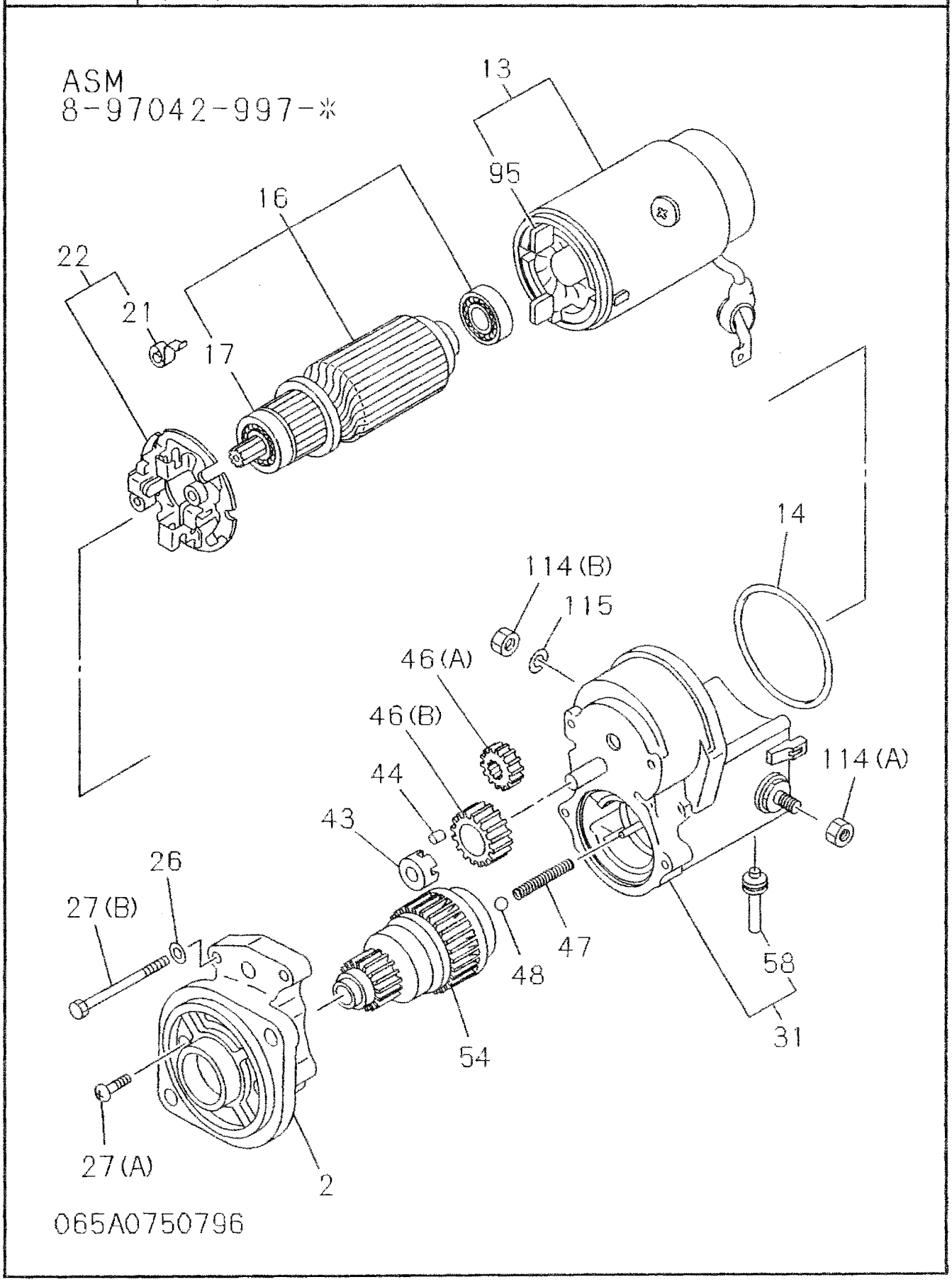

STARTER

0-65
FIG-NO.

KEY. NO	PART NAME / PART NUMBER	ITC	APPLIED DATE	LR	QTY	88888888 99999999 44444777 11344001 57712483 11703247 42344984 19505977 36192778 33000000 ABCDEFGHIJKLMNOPQRSTUVWXYZABCDEFGHIJKLMNOPQRSTUVWX	Remarks
1	SEAL KIT: STARTER						
	894321-6880		9503-		1	A	
	894178-0550		9503-		1	B	
2	CASE: PINION, STARTER						
	894178-0360		9503-		1	A	
	894438-8770		9503-		1	B	
	897037-6890		9503-		1	C	
	894435-5690		9503-		1	D G	
	894456-9010		9503-		1	E	
	894167-4350		9503-		1	F	
	897137-6000		9503-		1	H	
3	METAL: PINION CASE STARTER						
	894178-0370		9503-		1	A	
	894178-0370		9503-		1	B	
5	CLIP: PINION STOPPER STARTER						
	894178-0380		9503-		1	A	
	894178-0380		9503-		1	B	
6	STOPPER: PINION STARTER						
	894178-0390		9503-		1	A	
	894178-0390		9503-		1	B	
7	CLUTCH ASM: PINION, STARTER						
	897026-2430		9503-		1	C	
	894435-5630		9503-		1	D G	
	894456-8990		9503-		1	E	
8	BRACKET: CENTER STARTER						
	894178-0410		9503-		1	A	
	894178-0410		9503-		1	B	
9	BEARING: GEAR SHAFT STARTER						
	897026-2490		9503-		1	C	
	897026-2460		9503-		1	C	
	894228-4680		9503-		2	C	
	894228-4480		9503-		1	D G	
	894228-4490		9503-		1	D G	
	894435-5660		9503-		1	D G	
	894228-4680		9503-		2	E	
	897145-3230		9503-		1	H	
10	SHAFT: GEAR STARTER						
	894178-0440		9503-		1	A	
	894178-0440		9503-		1	B	
	897026-2440		9503-		1	C	
	894450-9190		9503-		1	D	
	894450-9000		9503-		1	E	

0-65 STARTER

FIG-NO.

KEY. NO	PART NAME / PART NUMBER	I T C	APPLIED DATE	L R	Q T Y	88888888 99999999 44444777 11344001 57712483 11703247 42344984 19505977 36192778 33000000	Remarks
						ABCDEFGHIJKLMNOPQRSTUVWXYZABCDEFGHIJKLMNOPQRSTUVWX	
10	SHAFT: GEAR STARTER						
	897145-3240		9503-		1	H	
	897116-4830		9503-		5	H	
11	WASHER: GEAR SHAFT STARTER						
(A)	894178-0430		9503-		1	A	
(B)	581129-1600		9503-		1	A	
(B)	581129-1590		9503-		1	A	
(B)	581129-1580		9503-		1	A	
(A)	894178-0430		9503-		1	B	
(B)	581129-1600		9503-		1	B	
(B)	581129-1590		9503-		AR	B	
(B)	581129-1580		9503-		1	B	
12	BRACKET: CENTER RR STARTER						
	894178-0450		9503-		1	A	
	894178-0450		9503-		1	B	
13	YOKE: STARTER						
	894167-4250		9503-		1	F	
	897116-5090		9503-		1	H	
14	GASKET: YOKE, STARTER						
	894167-4280		9503-		1	F	
	897116-4890		9503-		1	H	
15	WIRE: LEAD STARTER						
	894178-0270		9503-		1	A	
	894178-0270		9503-		1	B	
16	ARMATURE: STARTER						
	894418-8670		9503-		1	A	
	894418-8670		9503-		1	B	
	894152-9670		9503-		1	C	
	894435-5610		9503-		1	D G	
	894152-9670		9503-		1	E	
	897083-1930		9503-		1	F	
	897116-5080		9503-		1	H	
17	BEARING: ARMATURE, STARTER						
(A)	181129-5310		9503-		1	A	
(B)	894418-8660		9503-		1	A	
(A)	894418-8480		9503-		1	B	
(B)	894418-8660		9503-		1	B	
(A)	894228-4360		9503-		1	C	
(B)	894152-9680		9503-		1	C	
(A)	894228-4360		9503-		1	D G	
(B)	894228-4370		9503-		1	D G	
(A)	894228-4360		9503-		1	E	
(B)	894152-9680		9503-		1	E	

STARTER

0-65

FIG-NO.

KEY. NO	PART NAME / PART NUMBER	I T C	APPLIED DATE	L R	QTY	88888888 99999999 44444777 11344001 57712483 11703247 42344984 19505977 36192776 33000000 ABCDEFGHIJKLMNOPQRSTUVWXYZABCDEFGHIJKLMNOPQRSTUVWX	Remarks
17	BEARING; ARMATURE, STARTER						
	897093-1950		9503-		1	F	
	897116-4910		9503-		1	H	
18	WASHER; THRUST, ARMATURE, STARTER						
	581129-1560		9503-		1	A	
	581129-1560		9503-		AR	B	
19	COIL; FIELD, STARTER						
	894178-0520		9503-		1	A	
	894178-0520		9503-		1	B	
	894152-9690		9503-		1	C	
	894136-8990		9503-		1	D G	
	894152-9690		9503-		1	E	
20	BRUSH; (+), STARTER						
	894152-9700		9503-		2	C	
	894136-9000		9503-		2	D G	
	894152-9700		9503-		2	E	
	897116-5100		9503-		2	H	
21	SPRING; BRUSH HOLDER, STARTER						
	894178-0470		9503-		4	A	
	894178-0470		9503-		4	B	
	894152-9720		9503-		4	C	
	894242-0640		9503-		4	D G	
	894152-9720		9503-		4	E	
	581117-0150		9503-		4	F	
	897116-5160		9503-		4	H	
22	HOLDER; BRUSH, STARTER						
	894178-0480		9503-		1	A	
	894178-0480		9503-		1	B	
	894152-9710		9503-		1	C	
	894136-9010		9503-		1	D G	
	894152-9710		9503-		1	E	
	894167-4300		9503-		1	F	
	897116-5110		9503-		1	H	
23	COVER; RR COVER, STARTER						
	894418-8630		9503-		1	A	
	894178-0340		9503-		1	B	
	894438-3660		9503-		1	C	
	894435-5620		9503-		1	D G	
	894152-9740		9503-		1	E	
	897137-6010		9503-		1	H	
26	SEAL; THROUGH BOLT, STARTER						
	581129-2110		9503-		2	F	
27	BOLT; THROUGH, STARTER						
(A)	894178-0260		9503-		2	A	

0-65 STARTER

FIG-NO.

KEY. NO	PART NAME / PART NUMBER	I T C	APPLIED DATE	L R	QTY	88888888 99999999 44444777 11344001 57712483 11703247 42344984 19505977 36192778 33000000 ABCDEFGHIJKLMNOPQRSTUVWXYZABCDEFGHIJKLMNOPQRSTUVWX	Remarks
27	BOLT: THROUGH, STARTER						
(B)	894178-0350		9503-		2	A	
(C)	894178-0490		9503-		2	A	
(A)	894178-0260		9503-		2	B	
(B)	894178-0350		9503-		2	B	
(C)	894178-0490		9503-		2	B	
	894242-0710		9503-		2	C	
	894242-0710		9503-		2	D G	
	894242-8710		9503-		2	E	
(A)	894167-4340		9503-		2	F	
(B)	894167-4330		9503-		2	F	
	897116-5140		9503-		1	H	
28	LEVER: SHIFT, STARTER						
	894178-0170		9503-		1	A	
	894178-0170		9503-		1	B	
	894152-9800		9503-		1	C	
	894435-5710		9503-		1	D G	
	894152-9800		9503-		1	E	
	897116-4920		9503-		1	H	
29	PIN: SHIFT LEVER STARTER						
	181129-0400		9503-		1	A	
	181129-0400		9503-		1	B	
31	SWITCH: ENGAGE STARTER						
	894321-6860		9503-		1	A	
	894321-6860		9503-		1	B	
	897026-2470		9503-		1	C	
	894435-5680		9503-		1	D	
	894152-9810		9503-		1	E	
	897083-1960		9503-		1	F	
	897084-7070		9503-		1	G	
	897116-4940		9503-		1	H	
32	COVER: RUBBER, STARTER						
	894178-0210		9503-		1	A	
	581129-0690		9503-		1	C	HITACHI
	581129-0690		9503-		1	D G	HITACHI
	581129-0690		9503-		1	E	HITACHI
33	GASKET: ENGAGE SW STARTER						
	897026-3010		9503-		1	C	
41	SCREW: RR COVER, STARTER						
	581129-0240		9503-		4	A	
	581129-0240		9503-		4	B	
	894228-4390		9503-		4	C	
	894228-4390		9503-		4	D G	
	894228-4390		9503-		4	E	

STARTER

0-65
FIG-NO.

KEY NO	PART NAME / PART NUMBER	ITC	APPLIED DATE	LR	QTY	98888888 99999999 44444777 11344001 57712483 11703247 42344984 19505977 36192778 33000000 ABCDEFGHIJKLMNOPQRSTUVWXYZABCDEFGHIJKLMNOPQRSTUVWX	Remarks
41	SCREW: RR COVER, STARTER						
	897116-4950		9503-		1	H	
43	RETAINER: PINION STARTER						
	894435-5670		9503-		1	D G	
	581129-1000		9503-		1	F	
44	ROLLER: PINION STARTER						
	581129-0990		9503-		5	F	
45	RETAINER: BEARING, STARTER						
	897026-2480		9503-		1	C	
	894435-5700		9503-		1	D G	
	894152-9830		9503-		1	E	
46	GEAR: CLU STARTER						
(A)	581123-0100		9503-		1	F	
(B)	894167-4270		9503-		1	F	
(A)	897116-4850		9503-		1	H	
(B)	897116-4900		9503-		4	H	
47	SPRING: PINION STARTER						
	581129-0960		9503-		1	F	
48	BALL: PINION, STARTER						
	581129-0920		9503-		1	F	
	897116-5150		9503-		1	H	
50	BRUSH: (-), STARTER						
	894152-9730		9503-		2	C	
	894136-9000		9503-		2	D G	
	894152-9730		9503-		2	E	
51	COVER SET: DUST ENGAGE SW STARTER						
	894152-9820		9503-		1	C	
	894435-5720		9503-		1	D G	
	894152-9820		9503-		1	E	
54	CLUTCH: PINION, STARTER						
	894178-0400		9503-		1	A	
	894438-8780		9503-		1	B	
	897026-2450		9503-		1	C	
	894450-9180		9503-		1	D	
	894152-9770		9503-		1	E	
	581124-0030		9503-		1	F	
	897145-3250		9503-		1	H	
55	PINION: CLU, STARTER						
	897137-6060		9503-		1	H	
57	COVER ASM: RR, STARTER						
	894340-4440		9503-		1	B	

0-65 STARTER

FIG-NO.

KEY NO	PART NAME / PART NUMBER	I T C	APPLIED DATE	L R	QTY	88888888 99999999 44444777 11344001 57712483 11703247 42344984 19505977 36192778 33000000 ABCDEFGHIJKLMNOPQRSTUVWXYZABCDEFGHIJKLMNOPQRSTUVWX	Remarks
58	PIPE; DRAIN RR COVER STARTER						
	181129-6770		9503-		2	F	
59	TERMINAL; ENGAGE SW STARTER						
	894178-0280		9503-		1	A	
60	PLUNGER; ENGAGE SW STARTER						
	894178-0200		9503-		1	A	
61	CONTACT; ENGAGE SW STARTER						
	894178-0230		9503-		1	A	
62	BUSHING; ENGAGE SW STARTER						
	894178-0220		9503-		1	A	
63	HOLDER; ENGAGE SW STARTER						
	581118-0190		9503-		1	A	NIKKO
64	WASHER; INSULATION ENGAGE SW STARTER						
	894178-0240		9503-		1	A	
65	RING; CLIP ENGAGE SW STARTER						
	581129-1490		9503-		2	A	NIKKO
69	METAL; CENTER BRKT, STARTER						
	894178-0420		9503-		1	A	
	894178-0420		9503-		1	B	
73	STOPPER SET; PINION						
	894152-9780		9503-		1	C	
	894228-4500		9503-		1	D G	
	894152-9780		9503-		1	E	
	894475-6880		9503-		1	H	
78	TERMINAL; LEAD WIRE STARTER						
	894178-0280		9503-		1	A	
	894178-0280		9503-		1	B	
80	NUT; SHIFT LEVER PIN STARTER						
	509400-0250		9503-		1	A	
	509400-0250		9503-		1	B	
81	WASHER; SHIFT LEVER PIN, STARTER						
	982125-3410		9503-		2	A	
	581129-0220		9503-		2	B	
85	BOLT; ENGAGE SW FIX, STARTER						
	901910-6370		9503-		2	C	
	581129-2940		9503-		2	D G	
	901910-6370		9503-		2	E	

STARTER

0-65
FIG-NO.

KEY NO	PART NAME / PART NUMBER	TC	APPLIED DATE	LR	QTY	88888888 99999999 44444777 11344001 57712483 11703247 42344984 19505977 36192778 33000000 ABCDEFGHIJKLMNOPQRSTUVWXYZABCDEFGHIJKLMNOPQRSTUVWX	Remarks
86	RELAY: STARTER						
	181171-0280		9503-		1	A	
94	GASKET: GEAR CASE TO CENTER BRKT, STARTER						
	897026-2510		9503-		1	C	
95	BRUSH SET: (+) & (-), STARTER						
	894178-0530		9503-		2	B	
	894178-0540		9503-		2	B	
	897083-1940		9503-		1	F	
96	GASKET: FRT CASE						
	897026-2500		9503-		1	C	
114	NUT: TERMINAL						
(A)	909400-0420		9503-		1	F	
(B)	909110-5080		9503-		1	F	M8
115	WASHER: TERMINAL						
	909150-5080		9503-		1	F	ID=8
	897116-4840		9503-		1	H	

0-66	GENERATOR
FIG-NO.	(NO.1)

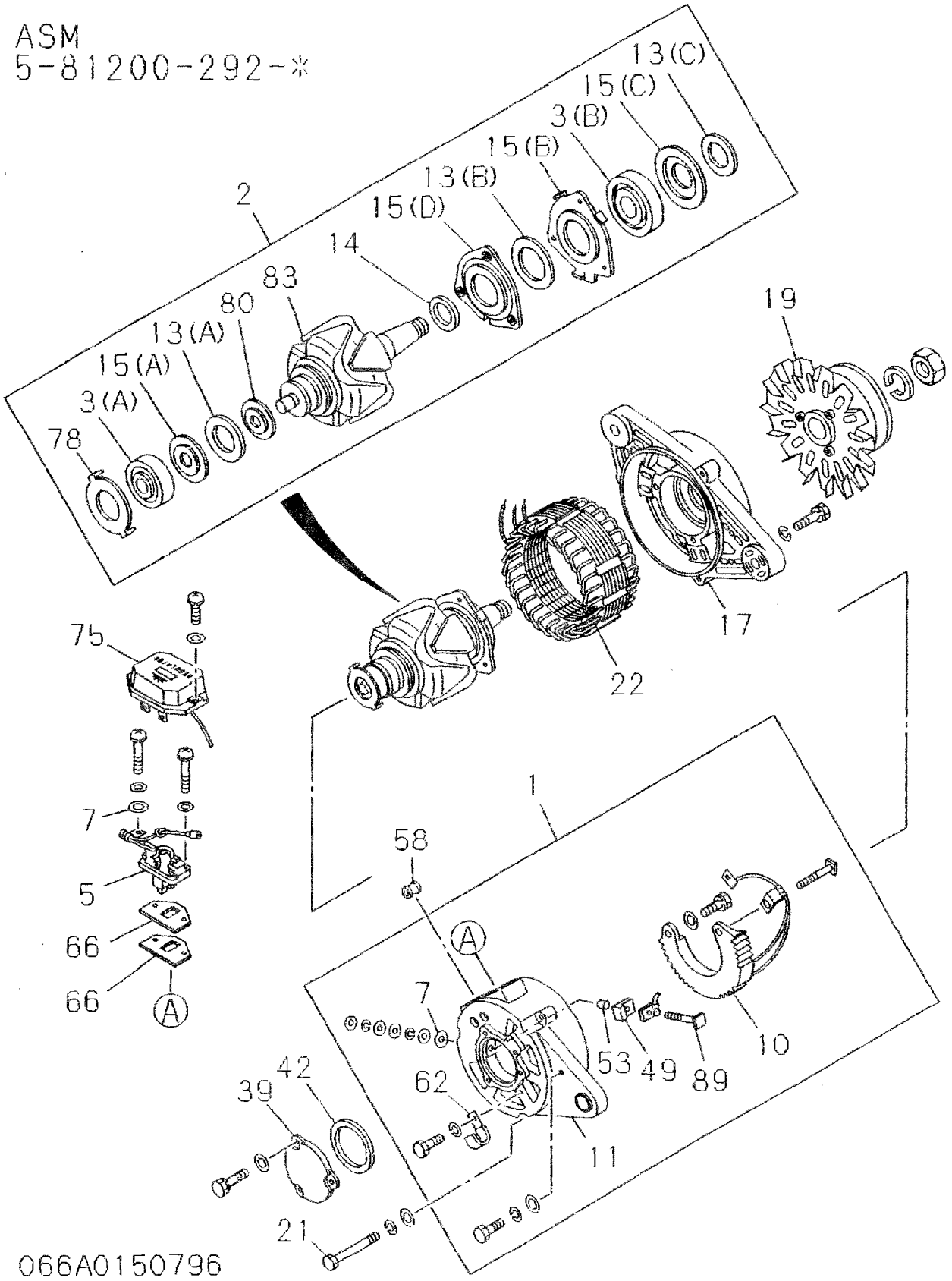

GENERATOR

(NO.2)

0-66

FIG-NO.

ASM
5-81200-330-*
8-94431-560-*
5-81200-347-*
8-94338-847-*
8-94153-882-*
8-94423-756-*
8-94417-924-*

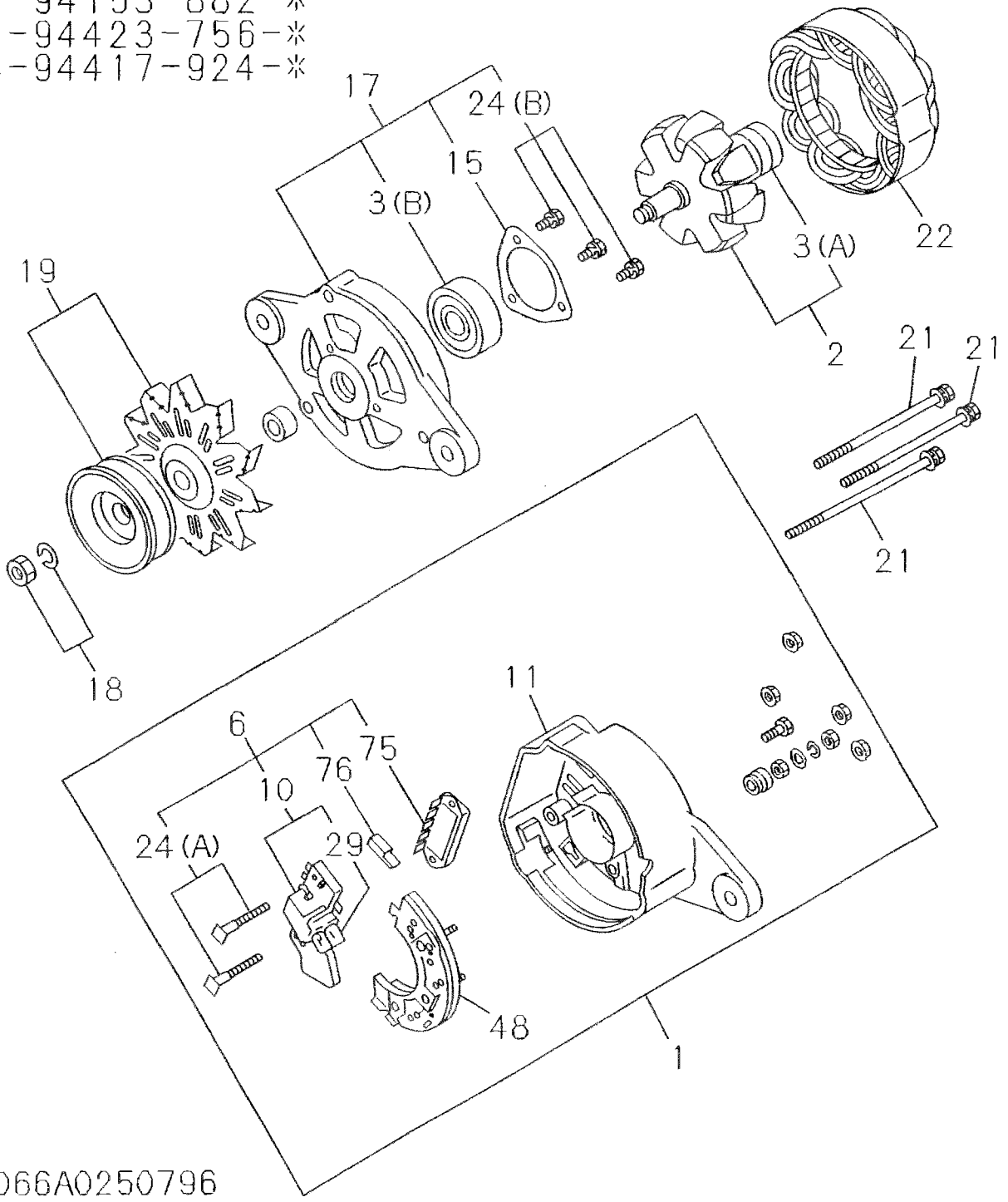

0-66	GENERATOR
FIG-NO.	(NO.3)

ASM
8-94338-096-*

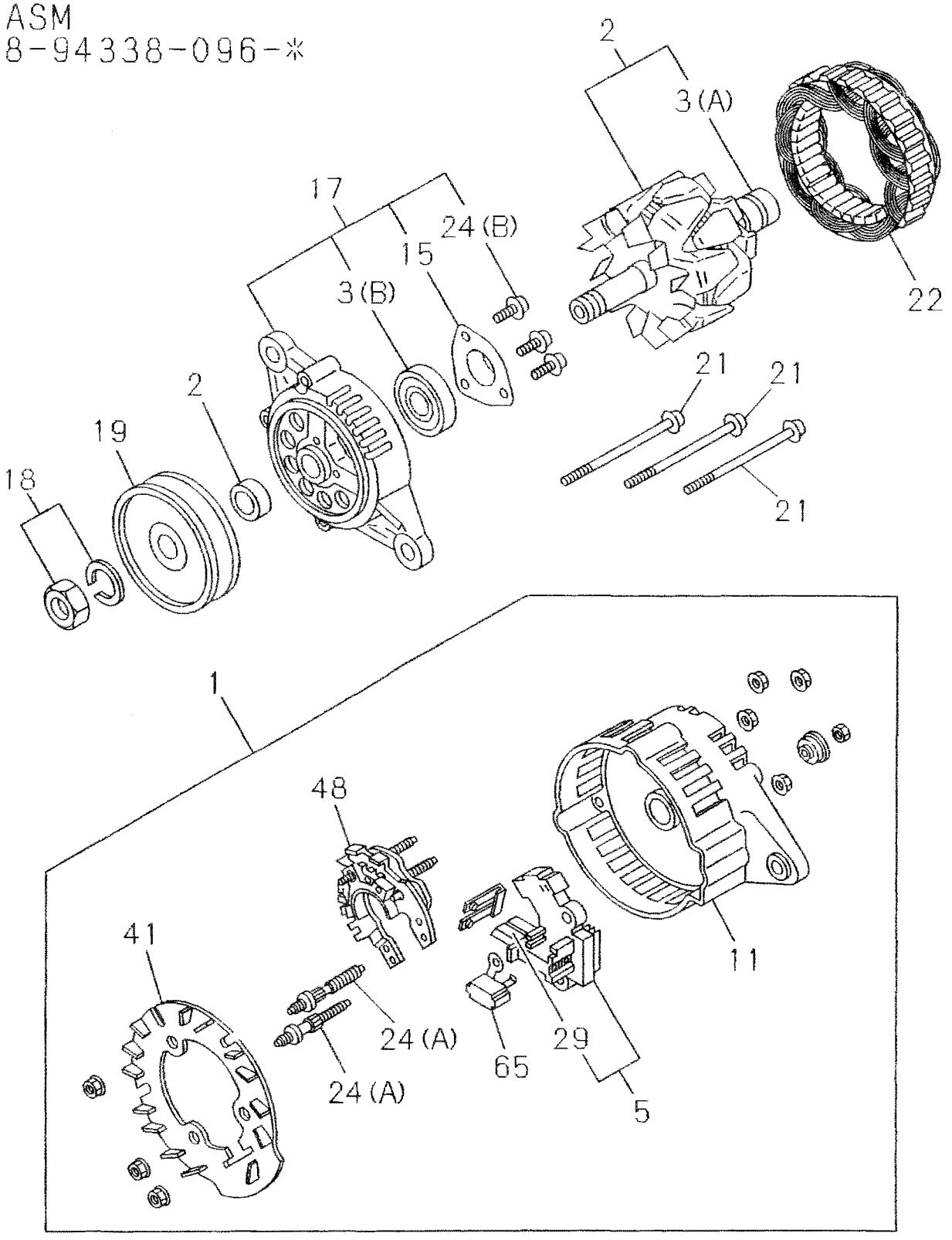

066A0350796

GENERATOR
(NO.4)

0-66
FIG-NO.

ASM
8-97023-263-*

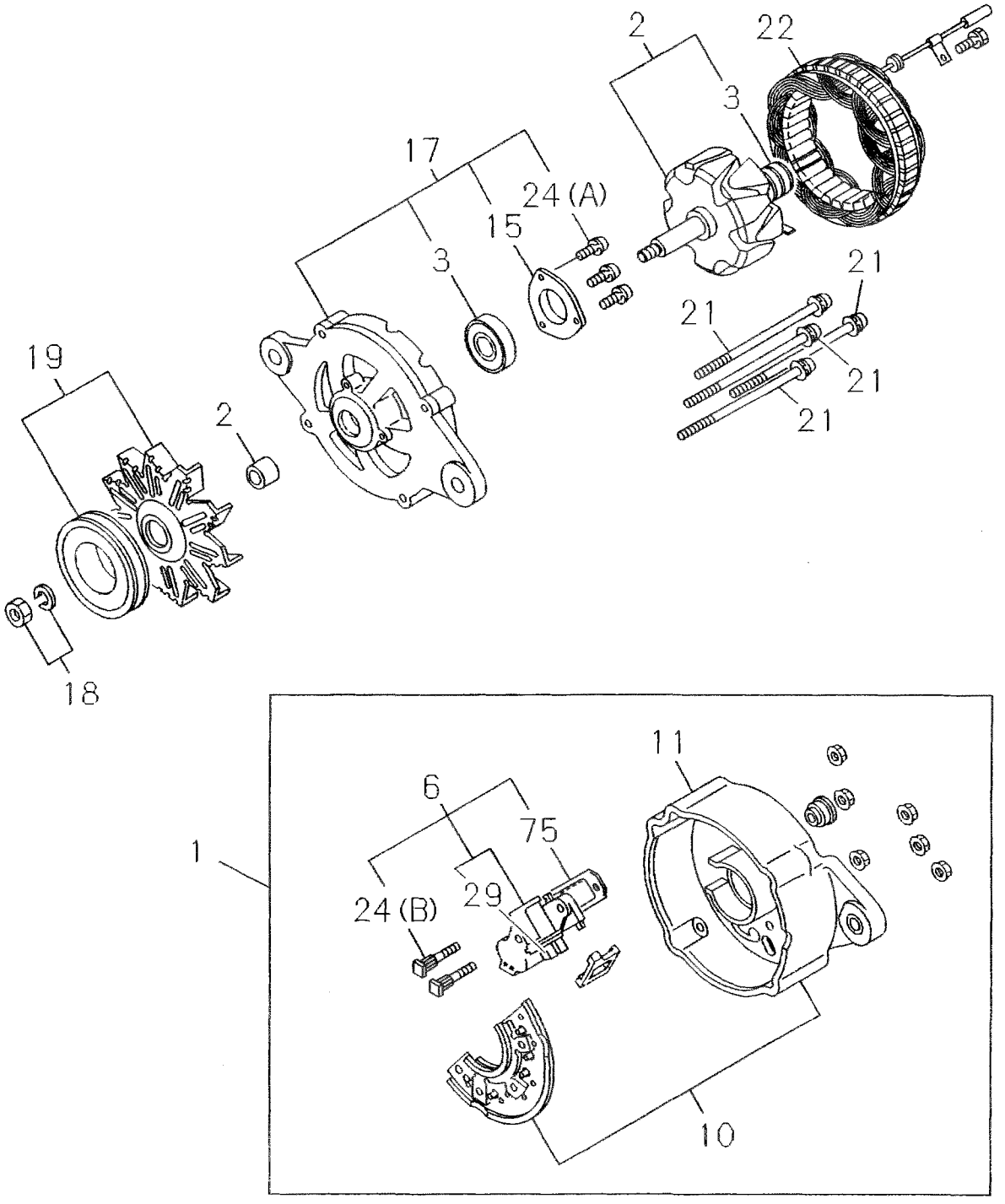

066A0450796

0-66	GENERATOR
FIG-NO.	(NO.5)

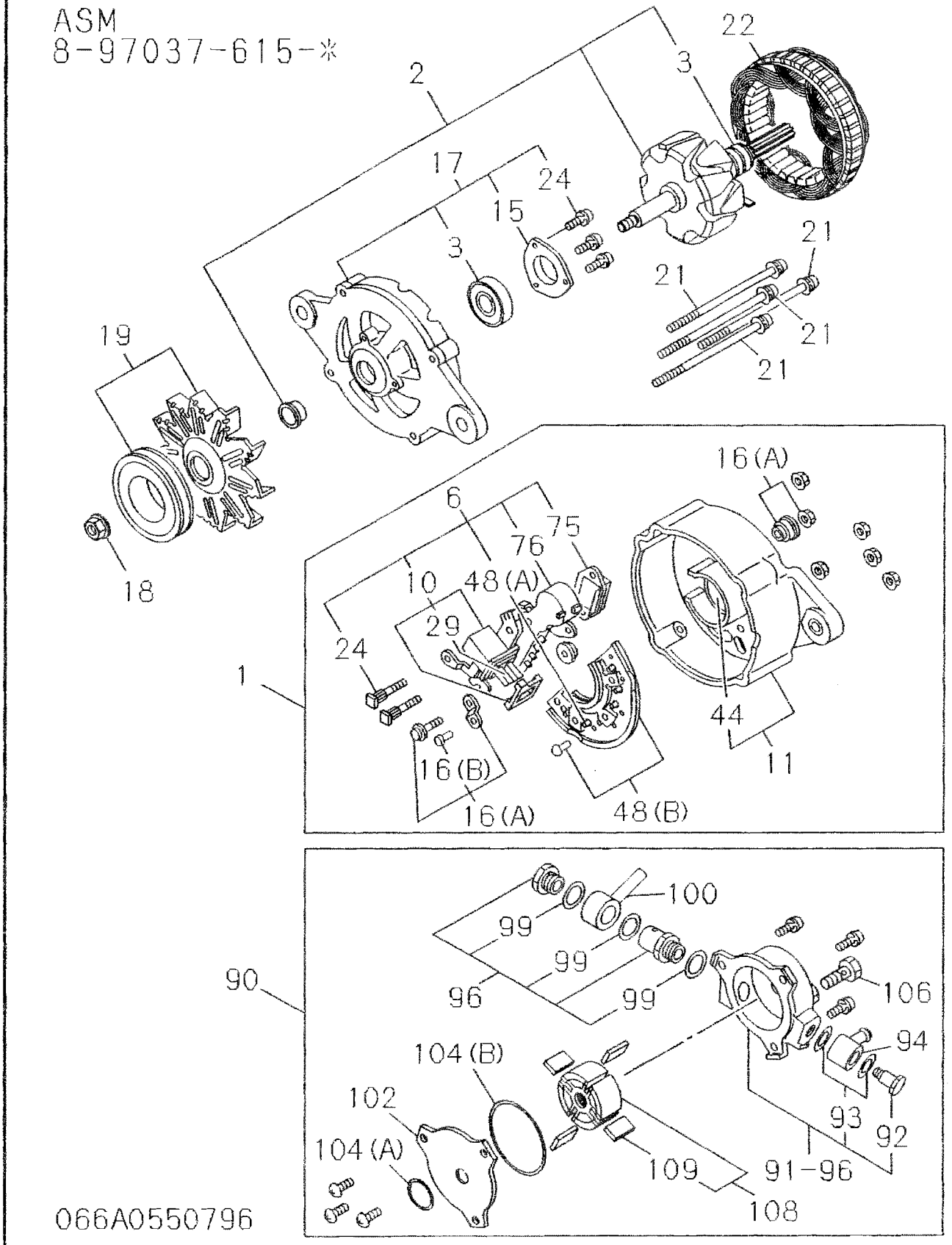

GENERATOR

(NO.6)

0-66

FIG-NO.

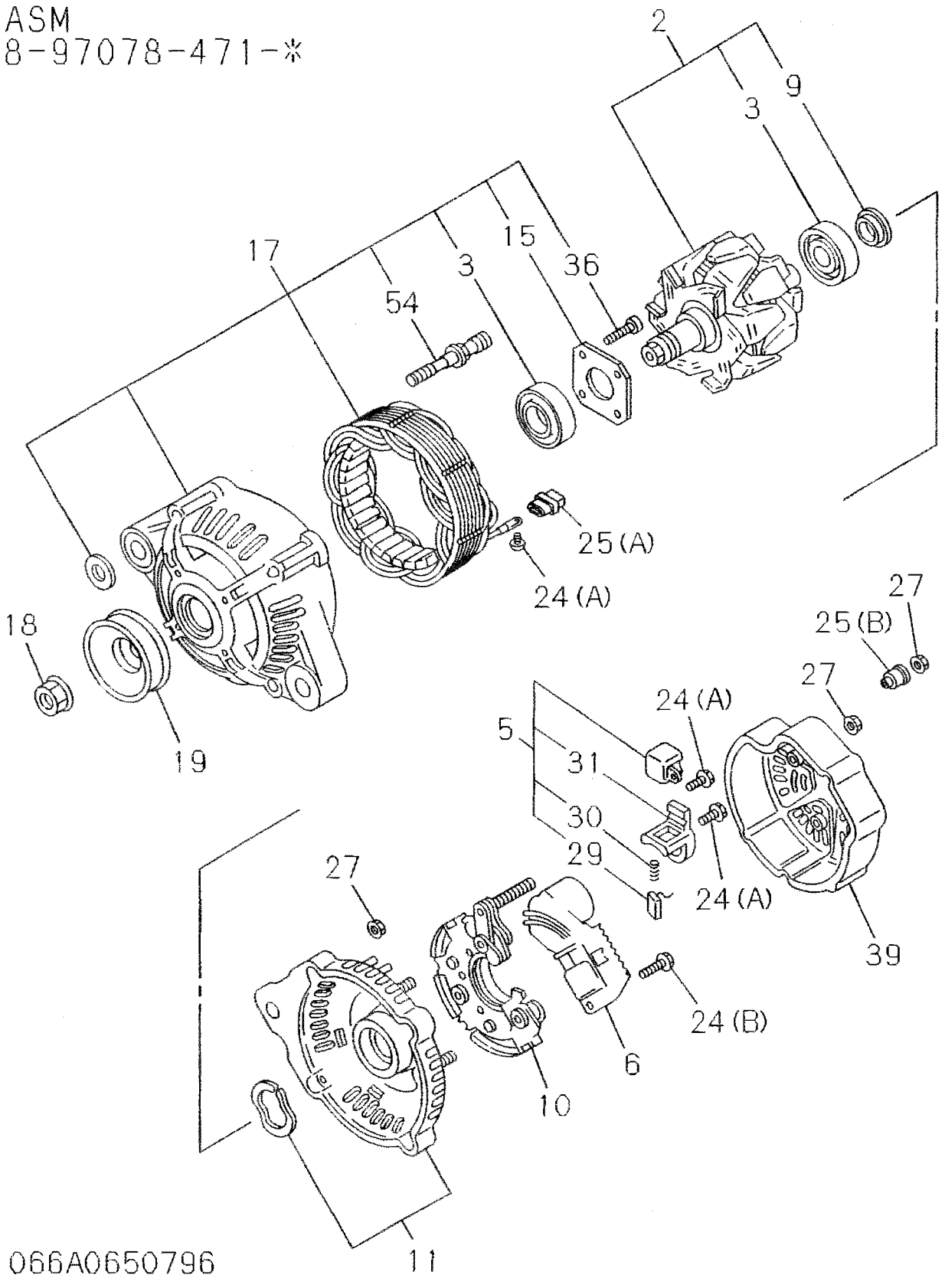

0-66	GENERATOR
FIG-NO.	(NO.7)

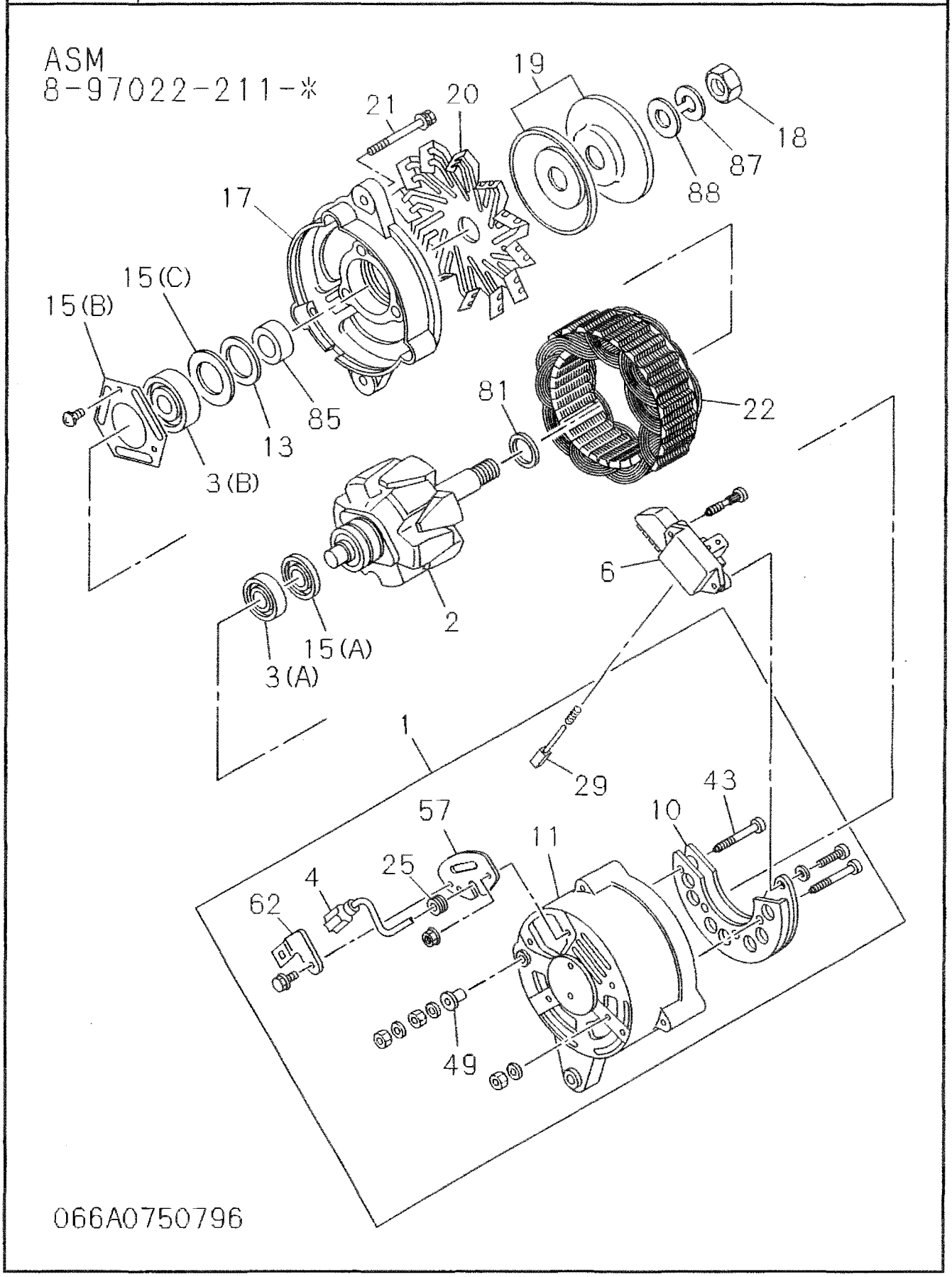

ASM
8-97143-329-*

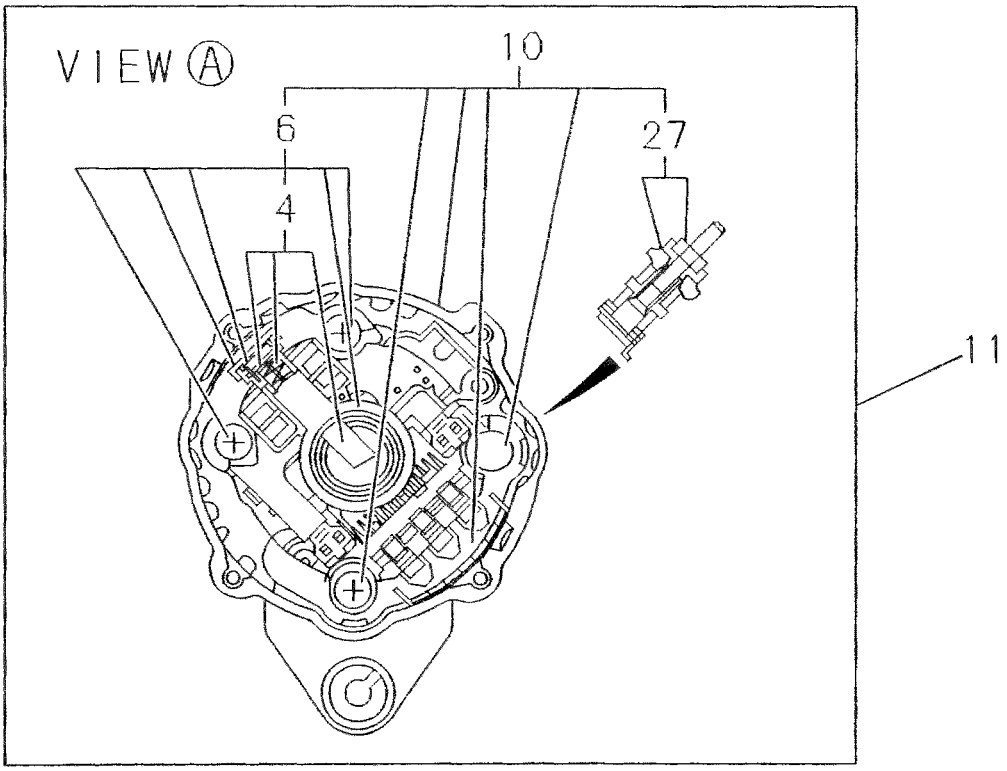

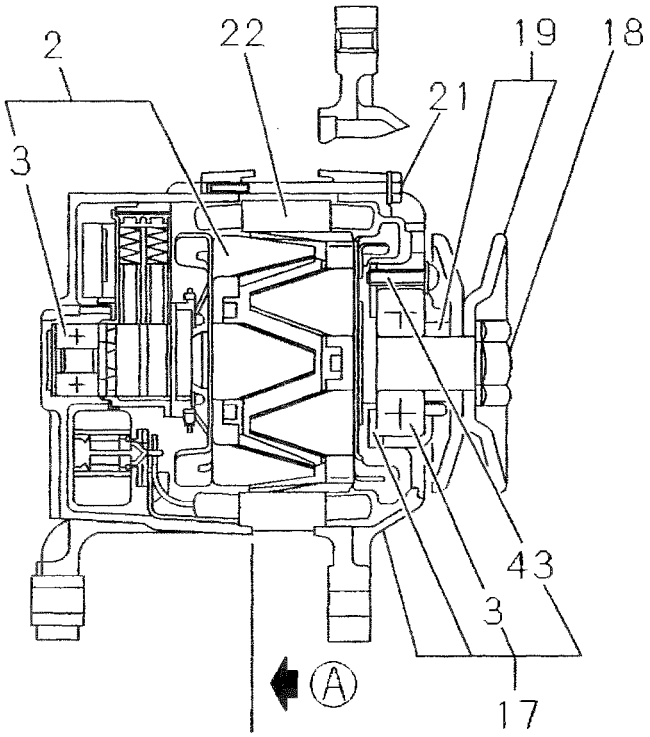

066A0850796

0-66 GENERATOR

FIG-NO.

KEY. NO	PART NAME / PART NUMBER	ITC	APPLIED DATE	LR	QTY	5558888888888888 / 8889999999999999 / 1114444447777777 / 2221334440000001 / 0005331232222374 / 0003887312323783 / 2338089752222643 / 9348942561616172 / 2072674601613519 / 1001010002100C	Remarks
						ABCDEFGHIJKLMNOPQRSTUVWXYZABCDEFGHIJKLMNOPQRSTUVWX	
1	COVER ASM: RR, GEN						
	581214-1201		9503-		1	A	
	581214-1230		9503-		1	B	
	521214-1520		9503-		1	C	
	894401-5710		9503-		1	D	
	894389-2320		9503-		1	E	
	894326-7690		9503-		1	F	
	894458-4120		9503-		1	G	
	581214-1310		9503-		1	H	
	894453-2510		9503-		1	I	
	897029-0560		9503-		1	J	
	897037-1700		9503-		1	K	
	897046-3680		9503-		1	L	
2	ROTOR: GEN						
	181221-0300		9503-		1	A	
	581221-0650		9503-		1	B	
	581221-0710		9503-		1	C	
	581221-0630		9503-		1	D H	
	894389-2450		9503-		1	E	
	894326-7680		9503-		1	F	
	894458-3990		9503-		1	G	
	894453-2490		9503-		1	I	
	897029-0540		9503-		1	J	
	897037-1670		9503-		1	K	
	897046-3670		9503-		1	L	
	894410-9840		9503-		1	M	
	897144-7280		9503-		1	N	ID=12 OD=24
3	BEARING: ROTOR, GEN						
(A)	181229-2240		9503-		1	A	
(B)	181229-2980		9503-		1	A	
(A)	900090-1810		9503-		1	BCD H	
(B)	509800-0870		9503-		1	B D F H	
(B)	894212-7140		9503-		1	C	
(A)	894389-2420		9503-		1	E	
(B)	894389-2410		9503-		1	E	
(A)	894326-7710		9503-		1	F	
(A)	894458-4240		9503-		1	G	
(B)	894458-4230		9503-		1	G	
(A)	894453-2580		9503-		1	I	
(B)	894223-9790		9503-		1	I	
(A)	894173-0540		9503-		1	J	
(B)	181229-2790		9503-		1	J	
	894462-8590		9503-		1	K	
	894333-5210		9503-		1	K	
	894121-1780		9503-		1	L	
	894223-9790		9503-		1	L	
	894406-9810		9503-		1	M	
	894123-0500		9503-		1	M	

GENERATOR

0-66

FIG-NO.

KEY. NO	PART NAME / PART NUMBER	I T C	APPLIED DATE	L R	Q T Y	5558888888888888 / 8889999999999999 / 1114444447777777 / 2221334440000001 / 0005331232232374 / 0003887312378 3 / 2338089752264 3 / 9348942561617 2 / 2072674601351 9 / 1001010002100 0 / ABCDEFGHIJKLMNOPQRSTUVWXYZABCDEFGHIJKLMNOPQRSTUVWX	Remarks
3	BEARING; ROTOR, GEN						
	897144-7400		9503-		1	N	ID=18 OD=24
	897144-7410		9503-		1	N	
4	TERMINAL; BRUSH, GEN						
	897029-0580		9503-		1	J	
	897144-7380		9503-		2	N	
5	HOLDER; BRUSH, GEN						
	181217-0230		9503-		1	A	
	894389-2340		9503-		1	E	
	894139-0131		9503-		1	M	
6	REGULATOR ASM; VOLTAGE, GEN						
	581219-0330		9503-		1	B	
	581219-0390		9503-		1	C	
	581219-0360		9503-		1	D H	
	894326-7760		9503-		1	F	
	894458-4150		9503-		1	G	
	894453-2530		9503-		1	I	
	181270-0150		9503-		1	J	
	897037-1720		9503-		1	K	
	894462-8720		9503-		1	L	
	894139-0120		9503-		1	M	
	897144-7420		9503-		1	N	
7	WASHER; INSULATE, RECTIFIER, GEN						
	181229-2270		9503-		1	A	
	181229-1350		9503-		1	A	
9	COVER; FELT WASHER, ROTOR, GEN						
	894123-0510		9503-		1	M	
10	RECTIFIER; GEN						
	181219-0330		9503-		1	A	
	581215-0460		9503-		1	B F	
	581215-0470		9503-		1	C	
	581215-0460		9503-		1	D H	
	894458-4160		9503-		1	G	
	894453-2540		9503-		1	I	
	897029-0570		9503-		1	J	
	897037-1740		9503-		1	K	
	894156-5920		9503-		1	L	
	894125-8840		9503-		1	M	
	897144-7370		9503-		1	N	
11	COVER; RR, GEN						
	581214-1211		9503-		1	A	
	581214-1240		9503-		1	B F	
	581214-1530		9503-		1	C	

0-66 GENERATOR

FIG-NO.

KEY NO	PART NAME / PART NUMBER	ITC	APPLIED DATE	LR	QTY	A	B	C	D	E	F	G	H	I	J	K	L	M	N	Remarks
						5812002921	5812003300	5812003470	8941538821	8943380960	8943388471	8944179240	8944237560	8944315600	8970222112	8970232631	8970376150	8970784710	8971433290	
11	COVER: RR. GEN																			
	894401-5720		9503-		1				D											
	894389-2330		9503-		1					E										
	894476-3860		9503-		1							G								
	581214-1320		9503-		1								H							
	894453-2520		9503-		1									I						
	894382-2790		9503-		1										J					
	897037-1710		9503-		1											K				
	897046-3690		9503-		1												L			
	894455-3690		9503-		1													M		
	897144-7360		9503-		1														N	
13	GASKET: ROTOR, GEN																			
(A)	181229-2310		9503-		1	A														
(C)	181229-1650		9503-		1	A														
(B)	181229-1620		9503-		1	A														
	894339-0420		9503-		1										J					
14	COLLAR: STEEL																			
	181229-1600		9503-		1	A														
15	RETAINER: ROTOR, GEN																			
(A)	982216-0600		9503-		1	A														
(B)	181229-1630		9503-		1	A														
(C)	181229-1640		9503-		1	A														
(D)	181229-1610		9503-		1	A														
	581229-0290		9503-		1		B		D		F		H							
	894233-6490		9503-		1			C				G								
	894389-2390		9503-		1					E										
	894223-9740		9503-		1									I						
(A)	894173-0600		9503-		1										J					
(B)	894338-8650		9503-		1										J					
(C)	894173-0590		9503-		1										J					
	894223-9740		9503-		1											K				
	894223-9740		9503-		1												L			
	894406-9820		9503-		1													M		
16	TERMINAL ASM: RECTIFIER, GEN																			
(A)	894156-5970		9503-		1												L			
(B)	894156-5980		9503-		1												L			
17	COVER ASM: FRT, GEN																			
	581213-0470		9503-		1	A														
	581213-0430		9503-		1		B		D		F		H							
	581213-0560		9503-		1			C												
	894389-2380		9503-		1					E										
	894458-4190		9503-		1							G								
	894143-0280		9503-		1									I						
	894382-2770		9503-		1										J					
	897037-1690		9503-		1											K				

GENERATOR

0-66
FIG-NO.

KEY. NO	PART NAME / PART NUMBER	ITC	APPLIED DATE	LR	QTY	A 5812002921	B 5812003300	C 5812003470	D 8941538821	E 8943380960	F 8943388471	G 8944179240	H 8944237560	I 8944315600	J 8970222112	K 8970232631	L 8970376150	M 8970784710	N 8971433290	Remarks
17	COVER ASM; FRT, GEN																			
	894462-8760		9503-		1												L			
	894413-8900		9503-		1													M		M6
	897144-7260		9503-		1														N	
18	NUT; PULLEY, GEN																			
	982235-0150		9503-		1		B		D		F		H							
	894233-6520		9503-		1			C				G		I						
	894410-3440		9503-		1					E										
	894173-0800		9503-		1										J					
	897037-1750		9503-		1											K				
	897016-3010		9503-		1												L			
	894123-0430		9503-		1													M		
	897145-3270		9503-		1														N	
19	PULLEY; GEN																			
	581222-0740		9503-		1	A														
	581222-0770		9503-		1		B		D		F		H							
	581222-0860		9503-		1			C												
	894389-2400		9503-		1					E										
	894458-4210		9503-		1							G								
	894460-2850		9503-		1									I						
	894173-0510		9503-		1										J					
	894143-0300		9503-		1											K				
	897016-3000		9503-		1												L			
	897084-1310		9503-		1													M		
	897144-7390		9503-		1														N	
20	FAN; GEN																			
	894173-0700		9503-		1										J					
21	BOLT; THROUGH, GEN																			
	181229-0970		9503-		3	A														
	581219-1890		9503-		2		B				F									
	581219-1900		9503-		1		B				F									
	894233-6510		9503-		4			C												
	581229-1830		9503-		1				D				H							
	894401-5730		9503-		2				D											
	581219-1890		9503-		2					E										
	894424-3730		9503-		1					E										
	894233-6510		9503-		2							G								
	894233-6510		9503-		2							G								
	581229-1820		9503-		2								H							
	894116-4350		9503-		4									I						
	181229-3820		9503-		3										J					
	894116-4350		9503-		4											K				
	894462-8790		9503-		2												L			
	894116-4350		9503-		2												L			
	897145-3280		9503-		1														N	ID=16 OD=22
22	STATOR; GEN																			
	581211-0620		9503-		1	A														

0-66 GENERATOR

FIG-NO.

KEY. NO	PART NAME / PART NUMBER	ITC	APPLIED DATE	LR	QTY	5558888888888888 / 8889999999999999 / 1114444447777777 / 2221334440000001 / 0005331232222374 / 0003887312323783 / 2338089752222643 / 9348942561616172 / 2072674601313519 / 1001010002101000	ABCDEFGHIJKLMNOPQRSTUVWXYZABCDEFGHIJKLMNOPQRSTUVWX	Remarks
22	STATOR; GEN							
	581211-0600		9503-		1	B		
	581211-0670		9503-		1	C		
	581211-0580		9503-		1	D H		
	894389-2460		9503-		1	E		
	894361-9130		9503-9605		1	F		
	897144-8450		9606-		1	F		
	894458-4110		9503-		1	G		
	894453-2500		9503-		1	I		
	897029-0550		9503-		1	J		
	897037-1680		9503-		1	K		
	894167-4060		9503-		1	L		
	897144-7320		9503-		1	N		
24	SCREW; RECTIFIER, GEN							
(A)	581229-1660		9503-		2	BCD FGHI		
(B)	581229-1650		9503-		1	BCD F H		
(A)	894389-2430		9503-		1	E		
(A)	894389-2440		9503-		1	E		
(B)	894410-3450		9503-		1	E		
(B)	894223-6530		9503-		1	G I		
(A)	894233-6530		9503-		1	K		
(B)	897037-8870		9503-		2	K		
	894462-8800		9503-		1	L		
(A)	894123-0660		9503-		7	M		
(B)	894123-0610		9503-		2	M		
25	BUSHING; INSULATION TERMINAL							
	181229-5200		9503-		1	J		
(A)	894123-0590		9503-		4	M		
(B)	894123-0630		9503-		1	M		
27	NUT; RECTIFIER, GEN							
	894123-0640		9503-		7	M		
	894206-1860		9503-		2	M		
	897145-5160		9503-		1	N		
29	BRUSH; GEN							
	581215-0400		9503-		2	BCD FGHI		
	894462-8500		9503-		2	E		
	894437-9220		9503-		2	J		
	897037-1730		9503-		2	K		
	894156-5930		9503-		2	L		
	894123-0560		9503-		2	M		
30	SPRING; BRUSH, GEN							
	894123-0570		9503-		2	M		
31	SHEET; BRUSH, GEN							
	894139-0141		9503-		1	M		

GENERATOR

0-66

FIG-NO.

KEY. NO	PART NAME / PART NUMBER	ITC	APPLIED DATE	LR	QTY	5558888888888888 / 8889999999999999 / 1114444447777777 / 2221334440000001 / 0005331232232374 / 0003887312323783 / 2338089752222643 / 9348942561616172 / 2072674601351 9 / 1001010002 1000	Remarks
						ABCDEFGHIJKLMNOPQRSTUVWXYZABCDEFGHIJKLMNOPQRSTUVWX	
36	SCREW; FRT COVER						
	894123-0470		9503-		4	M	
39	COVER; END, RR COVER, GEN						
	181214-0830		9503-		1	A	
	894125-8860		9503-		1	M	
41	GUIDE; FAN, GEN						
	894389-2350		9503-		1	E	
42	GASKET; RR COVER, GEN						
	181229-2330		9503-		1	A	
43	SCREW; RR END COVER						
	894382-2820		9503-		1	J	
	897144-7270		9503-		1	N	
44	SEAL; RR COVER, GEN						
	894156-5890		9503-		1	L	
48	DIODE; GEN						
	581262-0050		9503-		1	B D F H	
	581262-0060		9503-		1	C	
	894389-2360		9503-		1	E	
	894458-4170		9503-		1	G	
	894453-2550		9503-		1	I	
(A)	894237-7270		9503-		1	L	
(B)	894462-8750		9503-		1	L	
49	BUSHING; RECTIFIER, GEN						
	181229-2350		9503-		1	A	
	894173-0610		9503-		1	J	
53	TUBE; RECTIFIER, GEN						
	181229-2340		9503-		1	A	
54	BOLT; RECTIFIER, GEN						
	894123-0480		9503-		4	M	
57	COVER; BRUSH, GEN						
	181229-5440		9503-		1	J	
58	BUSHING; BRUSH, GEN						
	181229-1670		9503-		1	A	
62	CLIP; TERMINAL, BRUSH, GEN						
	181118-0110		9503-		1	A	
	181229-1220		9503-		1	J	
65	CONDENSER; GEN						
	894389-2370		9503-		1	E	

0-66 GENERATOR

FIG-NO.

KEY. NO	PART NAME / PART NUMBER	I T C	APPLIED DATE	L R	Q T Y	5558888888888888 8889999999999999 1114444447777777 2221334440000001 0005331232237 4 0003887312378 3 2338089752264 3 9348942561617 2 2072674601351 9 1001010002100 0 ABCDEFGHIJKLMNOPQRSTUVWXYZABCDEFGHIJKLMNOPQRSTUVWX	Remarks
66	GASKET; BRUSH HOLDER, GEN						
	181229-2260		9503-		1	A	
	181229-2320		9503-		1	A	
75	REGULATOR; VOLTAGE, GEN						
	181251-0240		9503-		1	A	
	581251-0160		9503-		1	B F I	
	581270-0040		9503-		1	CD GH	
	581251-0160		9503-		1	K	
	894462-8740		9503-		1	L	
76	BLOCK; REG, GEN						
	894458-4180		9503-		1	G	
	894462-8730		9503-		1	L	
78	CLIP; ROTOR, GEN						
	181229-2300		9503-		1	A	
80	PLATE; ROTOR, GEN						
	181229-1230		9503-		1	A	
81	SPACER; ROTOR, GEN						
	894173-0550		9503-		1	J	
83	RING; SLIP, ROTOR, GEN						
	181224-0090		9503-		1	A	
85	SPACER; PULLEY, GEN						
	894173-0560		9503-		1	J	
87	WASHER; PULLEY, GEN						
	181229-4790		9503-		1	J	
88	WASHER; PL, PULLEY GEN						
	894173-0570		9503-		1	J	
89	BOLT; RECTIFIER, GEN						
	181229-3100		9503-		1	A	
90	PUMP ASM; VAC, GEN						
	897046-3700		9503-		1	L	
91	BODY; VAC PUMP						
	894462-8850		9503-		1	L	
92	BOLT; DELIVERY, VAC PUMP						
	519619-0310		9503-		1	L	
93	GASKET; CONN, VAC PUMP						
	519679-0042		9503-		2	L	

GENERATOR

0-66

FIG-NO.

KEY. NO	PART NAME / PART NUMBER	I T C	APPLIED DATE	L R	Q T Y	5558888888888 / 8889999999999 / 1114444447777 / 2221334440001 / 0005331232 2374 / 0003887312 3783 / 2338089752 2643 / 9348942561 6172 / 2072674601 3519 / 1001010002 1000 / ABCDEFGHIJKLMNOPQRSTUVWXYZABCDEFGHIJKLMNOPQRSTUVWX	Remarks
94	CONNECTOR; VAC PUMP						
	894156-6400		9503-		1	L	
96	VALVE ASM; VAC PUMP						
	894462-8860		9503-		1	L	
99	GASKET; VAC PUMP						
	519679-0020		9503-		2	L	
	519679-0030		9503-		1	L	
100	CONNECTOR; VAC PUMP						
	519619-0330		9503-		1	L	
102	COVER; FRT. VAC PUMP						
	897046-3710		9503-		1	L	
104	GASKET; FRT COVER. VAC PUMP						
(A)	894223-9950		9503-		1	L	
(B)	894462-8770		9503-		1	L	
106	BOLT; OIL CONN. VAC PUMP						
	894223-9890		9503-		1	L	
108	ROTOR; VAC PUMP						
	897016-3040		9503-		1	L	
109	VANE; VAC PUMP						
	894462-8830		9503-		4	L	

0-80	INJECTION PUMP
FIG-NO.	(NO.1)

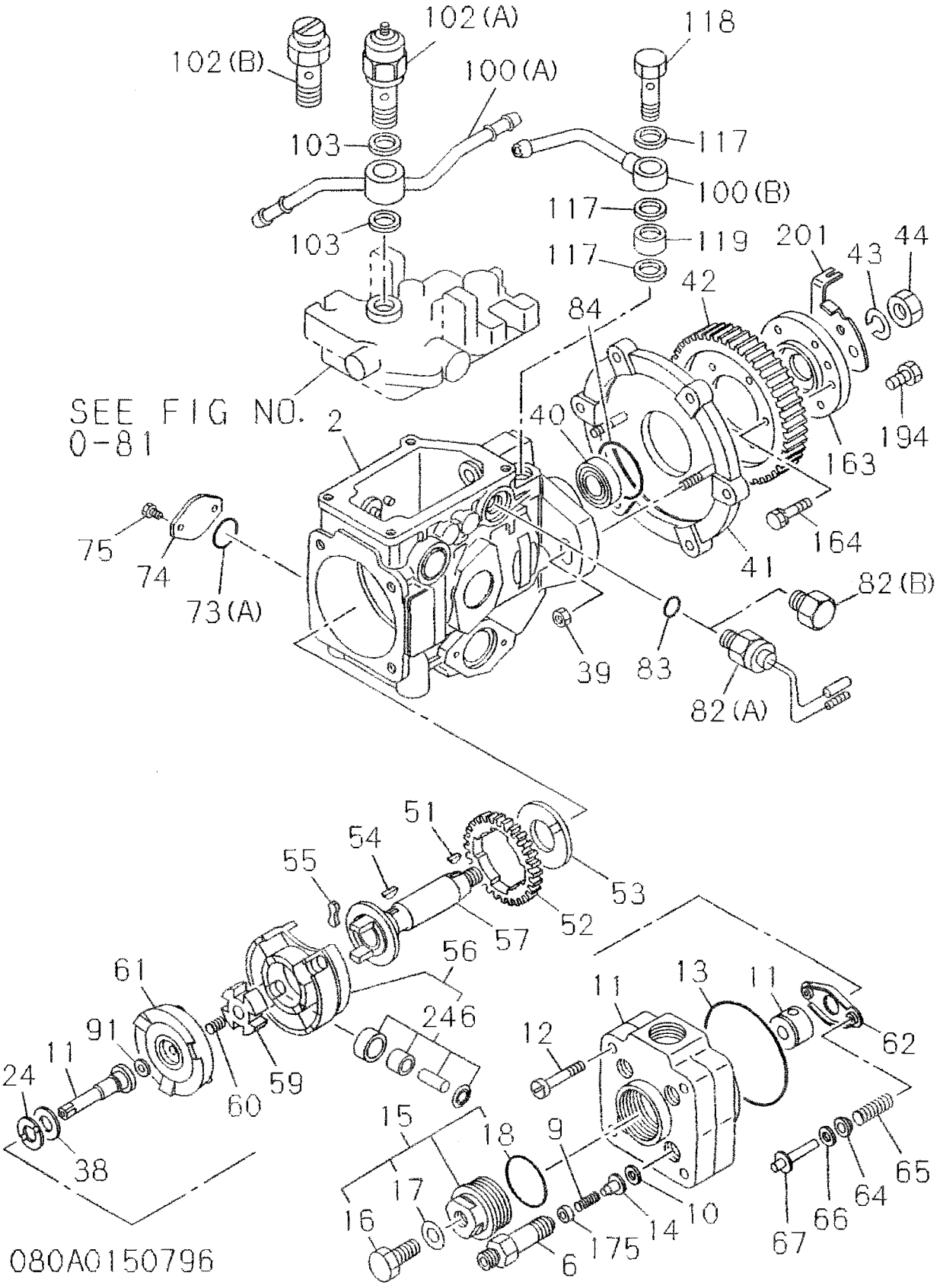

INJECTION PUMP

(NO.2)

0-80

FIG-NO.

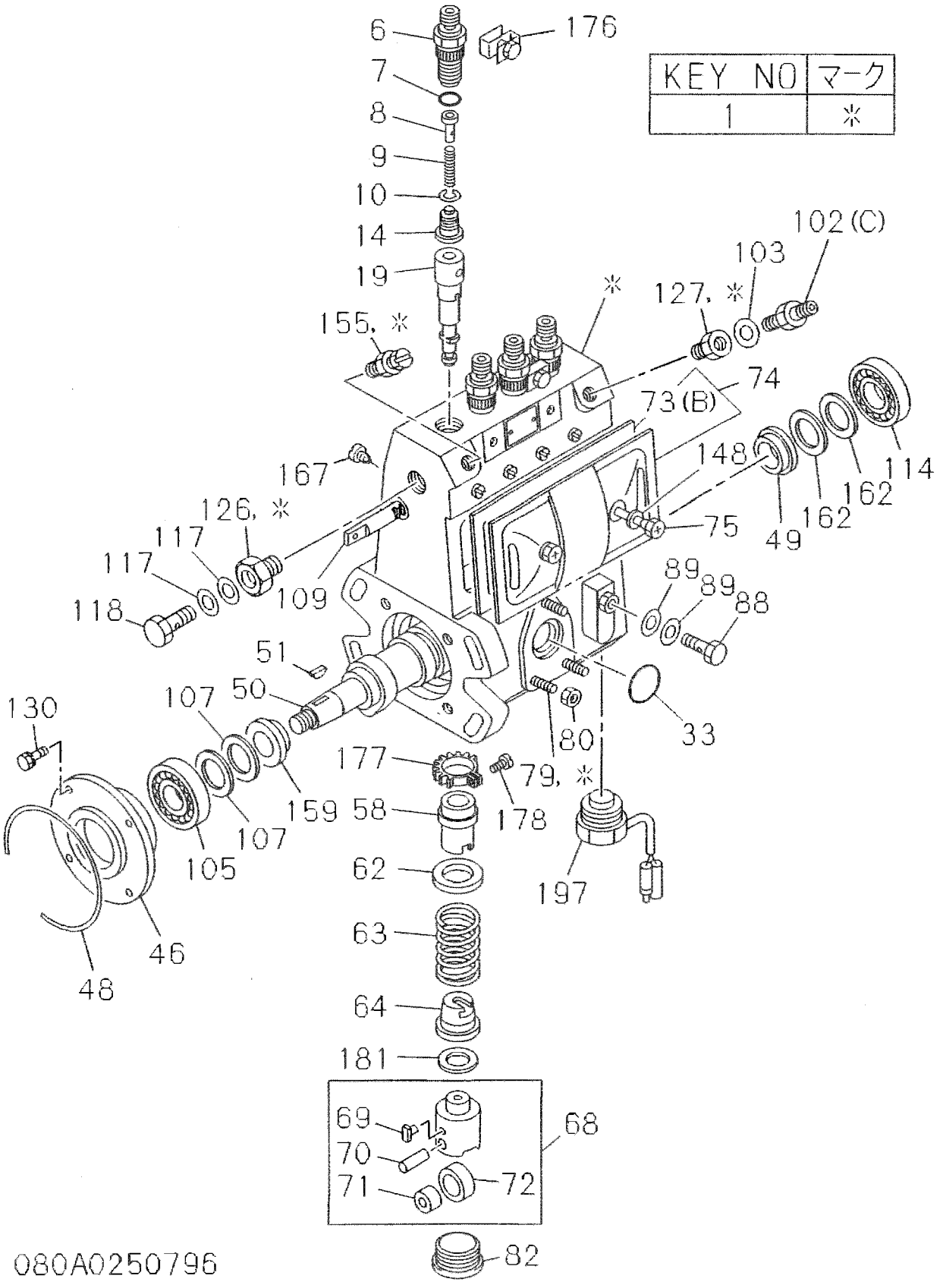

KEY NO	マーク
1	※

0-80 INJECTION PUMP

FIG-NO.

Column	Model No.
A	8943357071
B	8943413080
C	8943429343
D	8943603062
E	8943607061
F	8943732092
G	8943811481
H	8943881970
I	8943889600
J	8944040322
K	8944288042
L	8944419431
M	8944467751
N	8944492211
O	8944627554
P	8944659290
Q	8944761841
R	8947011479
S	8947011624
T	8947014420
U	8947015790
V	8947017760
W	8947020390
X	8947020757
Y	8947027060
Z	8947029949
A2	8947032231
B2	8947039657
C2	8947042082
D2	8947043525
E2	8947048794
F2	8947049026
G2	8947049192
H2	8947061575
I2	8947068551
J2	8947081573
K2	8947088599
L2	8947089427
M2	8947100265
N2	8947104509
O2	8947108922
P2	8947134873
Q2	8947134874
R2	8947137832
S2	8947139224
T2	8947168074
U2	8947173882
V2	8947176201
W2	
X2	

KEY NO	PART NAME / PART NUMBER	ITC	APPLIED DATE	LR	QTY	Applicable columns (ABCDE FGHIJ KLMNO PQRST UVWXY ZABCD EFGHI JKLMN OPQRS TUVWX)	Remarks
1	HOUSING; PUMP, FUEL INJ						
(A)	897021-4990		9503-		1	CDE FGH KLMNO R T U XY Z CD EFGHI JKLMN OPQRS TUV	
(B)	897062-9480		9503-		1	Q	
2	HOUSING ASM; PUMP, FUEL INJ						
	894418-0370		9503-		1	AB J W	
	894445-5790		9503-		1	I S V AB	
	894174-8310		9503-		1	P	
3	REPAIR KIT; FUEL INJ PUMP						
	894228-5450		9503-		1	AB J P W AB	
6	HOLDER; DELIVERY VALVE, INJ PUMP						
	894174-8050		9503-		4	AB IJ P S W AB	
	515644-0170		9503-		4	CDE FGH KLMNO QR T U XY Z CD EFGHI JKLMN OPQRS TUV	
	894317-4970		9503-		4	V	
7	GASKET; HOLDER, DELIVERY VALVE						
	109623-0520		9503-		4	CDE FGH KLMNO QR T U XY Z CD EFGHI JKLMN OPQRS TUV	
8	STOPPER; DELIVERY VALVE, INJ PUMP						
	515629-0450		9503-		4	CDE FGH KLMNO QR T U XY Z CD EFGHI JKLMN OP R TUV	
	515629-0450		9512-		4	S	
9	SPRING; DELIVERY VALVE						
	894174-8030		9503-		4	AB IJ P S VW AB	
	515643-0010		9503-		4	CDE FGH KLMNO QR T U XY Z CD EFGHI JKLMN OPQRS TUV	
10	GASKET; DELIVERY VALVE, INJ PUMP						
	894247-7160		9503-		4	AB IJ P S VW AB	
	115649-0010		9503-		4	CDE FGH KLMNO QR T U XY Z CD EFGHI JKLMN OPQRS TUV	
11	HEAD ASM; DISTR, INJ PUMP						
	894174-8390		9503-		1	AB P VW B	
	894386-6010		9503-		1	I S A	
	894418-0310		9503-		1	J	
12	SCREW; DISTR HD, INJ PUMP						
	894257-6700		9503-		4	AB IJ P S VW AB	
13	GASKET; DISTR HD, INJ PUMP						
	894227-5270		9503-		1	AB IJ P S VW AB	
14	VALVE; DELIVERY, INJ PUMP						
	894174-8020		9503-		4	AB J P W	
	894149-7560		9503-		4	C O U X G I	
	894167-7850		9503-		4	DE FGH KLMN QR T YZ K R	
	894408-5120		9503-		4	I S V A	
	894240-6190		9503-		4	B	
	515641-0030		9503-		4	C EF O	

INJECTION PUMP

FIG-NO. 0-80

KEY. NO	PART NAME / PART NUMBER	ITC	APPLIED DATE	LR	QTY	88888|88888|88888|88888|88888|88888|88888|88888|88888|888 99999|99999|99999|99999|99999|99999|99999|99999|99999|999 44444|44444|44444|44777|77777|77777|77777|77777|77777|777 33333|33334|44444|44000|00000|00000|00000|00011|11111|111 34466|78880|24446|67111|11222|23344|44466|88800|03333|677 51200|31884|81692|56114|57007|92923|89918|18904|84479|836 73937|21190|89727|91464|57370|92605|70155|55425|98882|082 00300|04963|04725|28722|77956|43582|92975|79260|27732|780 78466|98702|43515|94940|96070|91725|46251|39759|23424|421 10321|21002|21114|01001|00201|01101|00010|20112|01101|000 ABCDE|FGHIJ|KLMNO|PQRST|UVWXY|ZABCD|EFGHI|JKLMN|OPQRS|TUVWX	Remarks
14	VALVE; DELIVERY, INJ PUMP						
	897032-1620		9503-		4	D	
	515641-0010		9503-		4	H J LMN TUV	
	515641-0010		9503-9612		4	P	
	897146-8240		9503-		4	Q	
	897146-8240		9503-9511		4	S	
	515641-0010		9512-		4	S	
15	PLUG; DISTR, INJ PUMP						
	894174-8170		9503-		1	AB IJ P S VW AB	
16	BOLT; DISTR PLUG, INJ PUMP						
	894174-8180		9503-		1	AB IJ P S VW AB	
17	GASKET; BOLT, DISTR PLUG, INJ PUMP						
	894227-6020		9503-		1	AB IJ P S VW AB	
18	GASKET; DISTR PLUG, INJ PUMP						
	894227-6370		9503-		1	AB IJ P S VW AB	
19	PLUNGER ASM; INJ PUMP						
	894167-7840		9503-		4	CDE F H KLMN Q T XY Z GH J LMN	
	894440-2870		9503-		4	G O R U I K R	
	897046-4240		9503-		4	C EF O	
	897032-1610		9503-		4	D	
	897146-8130		9503-		4	PQ S TUV	
24	WASHER; PLUNGER, INJ PUMP						
	894227-5150		9503-		1	AB J P VW B	
	894317-4930		9503-		1	I S A	
33	GASKET; FUEL FEED PUMP, INJ PUMP						
	109623-0130		9503-		1	CDE FGH KLMNO QR T U XY Z CD EFGHI JKLMN OPQRS TUV	
38	SHIM; PLUNGER BARREL, INJ PUMP						
	894227-5140		9503-		1	AB IJ P S VW AB	
39	NUT; MTG BRACKET FIX						
	894227-8290		9503-		2	AB J P	
	894244-8290		9503-		2	I S V AB	
	894227-8290		9503-9511		2	W	
	897119-3440		9512-		2	W	
40	SEAL; OIL, CM/SHF FRT, INJ PUMP						
	894227-4750		9503-		1	AB I P S VW AB	
	894418-0380		9503-		1	J	
41	BRACKET; INJ PUMP HSG						
	894174-8430		9503-		1	AB J P VW B	
	894317-5150		9503-		1	I S A	

0-80 INJECTION PUMP

FIG-NO.

KEY NO — PART NAME

Model code columns (read vertically, one code per column):

```
88888888888888888888888888888888888888888888888888888
99999999999999999999999999999999999999999999999999999
44444444444444444777777777777777777777777777777777777
33333333344444440000000000000000000000011111111111111
34466788802444667111112222334444466888000333336771
51200318848169256114570079292389918189048447983 6
73937211908972791464573709260570155554259888208 2
00300049630472528722779564358292975792602773278 0
78466987024351594940960709172546251397592342442 1
10321210022111401001002010110100010201120110100 0
```

ABCDE FGHIJ KLMNO PQRST UVWXY ZABCD EFGHI JKLMN OPQRS TUVWX

KEY NO	PART NAME / PART NUMBER	ITC	APPLIED DATE	LR	QTY	Applicability	Remarks
42	GEAR; DRIVE, INJ PUMP						
	894326-3500		9503-		1	A B I S W A B	
	894139-7441		9503-		1	J P	
	894468-0760		9503-		1	V	
43	WASHER; LK, DRIVE GEAR, INJ PUMP						
	894227-6480		9503-		1	A B I J P S V A B	
	894227-6480		9503-9511		1	W	
44	NUT; DRIVE GEAR FIX, INJ PUMP						
	115629-0060		9503-		1	A B I J P S V A B	
	115629-0060		9503-9511		1	W	
	894226-5650		9512-		1	W	M14
46	COVER; FRT, PUMP HSG						
	894167-7860		9503-		1	C D E F G H K L M N O Q R T U X Y Z C D E F G H I J K L M N O P Q R S T U V	
48	GASKET; FRT COVER TO HSG						
	515619-1560		9503-		1	C D E F G H K L M N O Q R T U X Y Z C D E F G H I J K L M N O P Q R S T U V	
49	RING; FRT BRG, CM/SHF						
	981225-0470		9503-		1	C D E F G H K L M N O Q R T U X Y Z C D E F G H I J K L M N O P Q R S T U V	
50	CAMSHAFT; INJ PUMP						
	897021-5000		9503-		1	C D E F G H K L M N O Q R T U X Y Z C D E F G H I J K L M N O P Q R S T U V	
51	KEY; DRIVE GEAR, INJ PUMP						
	583539-0240		9503-		1	A B I J P S V A B	
	519619-0490		9503-		1	C D E F G H K L M N O Q R T U X Y Z C D E F G H I J K L M N O P Q R S T U V	16MM
	583539-0240		9503-9511		1	W	
52	GEAR; GOV DRIVE, INJ PUMP						
	894227-4830		9503-		1	A B I J P S V W A B	
53	WASHER; GOV DRIVE GEAR, INJ PUMP						
	894227-4840		9503-		1	A B J P V W B	
	894317-4880		9503-		1	I S A	
54	KEY; FEED PUMP, INJ PUMP						
	894227-4810		9503-		1	A B I J P S V W A B	
55	DAMPER; CAM DRIVE, INJ PUMP						
	894227-4821		9503-		2	A B I J P S V W A B	
56	ROLLER ASM; TIMER, INJ PUMP						
	894227-4850		9503-		1	A B J P V B	
	894317-4890		9503-		1	I S A	
	894227-4850		9503-9511		1	W	
	894433-7600		9512-		1	W	
57	SHAFT; DRIVE, INJ PUMP						
	894227-4800		9503-		1	A B J P V W B	

INJECTION PUMP

0-80

FIG-NO.

KEY. NO | PART NAME

Applicability codes (serial number columns):

```
88888|88888|88888|88888|88888|88888|88888|88888|88888|888
99999|99999|99999|99999|99999|99999|99999|99999|99999|999
44444|44444|44444|44777|77777|77777|77777|77777|77777|777
33333|33334|44444|44000|00000|00000|00000|00011|11111|111
34466|78880|24446|67111|11222|23344|44466|88800|03333|677
51200|31884|81692|56114|57007|92923|89918|18904|84479|836
73937|21190|89727|91464|57370|92605|70155|55425|98882|082
00300|04963|04725|28722|77956|43582|92975|79260|27732|780
78466|98702|43515|94940|96070|91725|46251|39759|23424|421
10321|21002|21114|01001|00201|01101|00010|20112|01101|000
ABCDE|FGHIJ|KLMNO|PQRST|UVWXY|ZABCD|EFGHI|JKLMN|OPQRS|TUVWX
```

KEY NO	PART NUMBER / PART NAME	ITC	APPLIED DATE	LR	QTY	Applicability	Remarks
57	SHAFT: DRIVE, INJ PUMP						
	894321-1650		9503-		1	I S A	
58	SLEEVE: CONT, INJ PUMP						
	981225-0580		9503-		4	CDEFGH KLMNO QR TU XYZ CDEFGHIJKLMNOPQRSTUV	
59	DISC: DRIVE, INJ PUMP						
	894227-4890		9503-		1	AB J P V B	
	894317-4900		9503-		1	I S A	
	894317-4900		9503-9511		1	W	
	894227-4890		9512-		1	W	
60	SPRING: DRIVE DISC, INJ PUMP						
	894227-6470		9503-		1	AB IJ P S VW AB	
61	CAM: DISC, PLUNGER, INJ PUMP						
	894174-8320		9503-		1	AB J P VW B	
	894321-1700		9503-		1	I S A	
62	SEAT: PLUNGER SPRING, INJ PUMP						
	894227-5161		9503-		1	AB IJ P S VW AB	
	981235-0150		9503-		4	CDEFGH KLMNO QR TU XYZ CDEFGHIJKLMNOPQRSTUV	
63	SPRING: PLUNGER, INJ PUMP						
	515643-0090		9503-		4	CDEFGH KLMNO QR TU XYZ CDEFGHIJKLMNOPQRSTUV	
64	SEAT: PLUNGER SPRING LWR, INJ PUMP						
	894227-5170		9503-		2	AB I P S VW AB	
	981235-0210		9503-		4	CDEFGH KLMNO QR U XYZ CDEFGHIJKLMNOPQRSTUV	
65	SPRING KIT: PLUNGER, INJ PUMP						
	894228-4040		9503-		1	AB IJ P S VW AB	
66	SHIM: PLUNGER SPRING, INJ PUMP						
	894227-5180		9503-		AR	AB IJ P S VW AB	T=0.50
	894227-5190		9503-		AR	AB IJ P S VW AB	T=0.80
	894227-5200		9503-		AR	AB IJ P S VW B	T=1.00
	894227-5210		9503-		AR	AB IJ P S VW B	T=1.20
	894227-5220		9503-		AR	AB IJ P S VW B	T=1.50
	894227-5230		9503-		AR	AB IJ P S VW B	T=1.80
	894227-5240		9503-		AR	AB IJ P S VW B	T=2.00
	894433-2040		9503-		AR	AB I S VW B	T=0.90
	894433-2050		9503-		AR	AB I S VW B	T=1.10
	894433-2060		9503-		AR	AB I S VW B	T=1.30
	894433-2070		9503-		AR	AB I S VW B	T=1.40
	894433-2080		9503-		AR	AB I S VW B	T=1.60
	894433-2090		9503-		AR	AB I S VW B	T=1.70
67	PIN: GUIDE, PLUNGER SPRING						
	894227-5250		9503-		2	AB IJ P S VW AB	

0-80 INJECTION PUMP

FIG-NO.

KEY. NO	PART NAME	PART NUMBER	I T C	APPLIED DATE	L R	Q T Y	88888888888888888888888888888888888888888888888888888888 99999999999999999999999999999999999999999999999999999999 44444444444444444777777777777777777777777777777777777777 33333333334444444400000000000000000000000011111111111111 34466788802444667111112222233344444466880003333677 51200318848169256114570079292389918189048447983 6 73937211908972791464573709260570155554259888208 2 00300049630472528722779564358292975792602773278 0 78466987024351594940960709172546251397592342442 1 10321210022111401001002010110100010201120110100 0 ABCDEFGHIJKLMNOPQRSTUVWXYZABCDEFGHIJKLMNOPQRSTUVWX	Remarks
68	TAPPET; CM/SHF, INJ PUMP							
	981221-2230	9503-				4	CDEFGH KLMNO QR TU XYZ CDEFGHIJKLMNOPQRSTUV	
69	GUIDE; TAPPET, INJ PUMP							
	515619-0410	9503-				4	CDEFGH KLMNO QR TU XYZ CDEFGHIJKLMNOPQRSTUV	
70	PIN; TAPPET ROLLER, INJ PUMP							
	981222-2200	9503-				4	CDEFGH KLMNO QR TU XYZ CDEFGHIJKLMNOPQRSTUV	
71	BUSHING; TAPPET ROLLER, INJ PUMP							
	115629-0010	9503-				4	CDEFGH KLMNO QR TU XYZ CDEFGHIJKLMNOPQRSTUV	
72	ROLLER; TAPPET, INJ PUMP							
	115622-0030	9503-				4	CDEFGH KLMNO QR TU XYZ CDEFGHIJKLMNOPQRSTUV	
73	GASKET; COVER TO HSG							
(A)	894227-4910	9503-				1	AB IJ P S VW AB	
(B)	894386-5960	9503-				1	CDEFGH KLMNO QR TU XYZ CDEFGHIJKLMNOPQRSTUV	
74	COVER; HSG, INJ PUMP							
	894242-9670	9503-				1	AB IJ P S VW AB	
	894171-1090	9503-				1	CDEFGH KLMNO QR TU XYZ CDEFGHIJKLMNOPQRSTUV	
75	SCREW; COVER TO HSG							
	894313-2760	9503-				2	AB I S VW AB	
	115619-0030	9503-				2	CDEFGH KLMNO QR TU XYZ CDEFGHIJKLMNOPQRSTUV	
	894227-5010	9503-				2	J P	
79	STUD; FUEL FEED PUMP TO HSG							
	981215-1150	9503-				3	CDEFGH KLMNO QR TU XYZ CDEFGHIJKLMNOPQRSTUV	
80	NUT; FUEL FEED PUMP FIX							
	894171-1100	9503-				3	CDEFGH KLMNO QR TU XYZ CDEFGHIJKLMNOPQRSTUV	
82	PLUG; HSG, INJ PUMP							
(B)	894465-2840	9503-				1	AB J	GRAY
	515619-1360	9503-				4	CDE G KLM QR TU XYZ D FGHIJKLMN PQRSTUV	
	515619-1360	9503-				3	F H NO C E O	
(A)	894403-2891	9503-				1	I S V A	
(A)	894440-2810	9503-				1	P	
(B)	894242-2840	9503-				1	W B	
83	GASKET; HSG PLUG							
	894227-6710	9503-				1	AB IJ P S V AB	
	894227-6710	9512-				1	W	
84	GASKET; BRACKET TO HSG							
	894247-7220	9503-				1	AB IJ P S V AB	
	894247-7220	9503-9511				1	W	
	909561-3530	9512-				1	W	

INJECTION PUMP

FIG-NO. 0-80

KEY NO | PART NAME

Model code header (applicability columns, read vertically):

88888	88888	88888	88888	88888	88888	88888	88888	88888	888
99999	99999	99999	99999	99999	99999	99999	99999	99999	999
44444	44444	44444	44777	77777	77777	77777	77777	77777	777
33333	33334	44444	44000	00000	00000	00000	00011	11111	111
34466	78880	24446	67111	11222	23344	44466	88800	03333	677
51200	31884	81692	56114	57007	92923	89918	18904	84479	836
73937	21190	89727	91464	57370	92605	70155	55425	98882	082
00300	04963	04725	28722	77956	43582	92975	79260	27732	780
78466	98702	43515	94940	96070	91725	46251	39759	23424	421
10321	21002	21114	01001	00201	01101	00010	20112	01101	000
ABCDE	FGHIJ	KLMNO	PQRST	UVWXY	ZABCD	EFGHI	JKLMN	OPQRS	TUVWX

KEY NO	PART NUMBER	ITC	APPLIED DATE	LR	QTY	Applicability	Remarks
88	**BOLT; EYE, OIL FEED, INJ PUMP**						
	897012-8360		9503-		1	C D E F G H K L M N O Q T U X Y Z C D E F G H I J K L M N O P Q R S T U V	
	897021-5010		9503-		1	R	
89	**GASKET; OIL FEED BOLT, INJ PUMP**						
	909572-0100		9503-		2	C D E F G H K L M N O Q R T U X Y Z C D E F G H I J K L M N O P Q R S T U V	ID=10.2 OD=19
91	**SHIM; PLUNGER, INJ PUMP**						
	894227-5350		9503-		AR	A B I S V W A B	T=2.04
	894227-5360		9503-		AR	A B I S V W A B	T=2.06
	894227-5370		9503-		AR	A B I S V W A B	T=2.08
	894227-5380		9503-		AR	A B I S V W A B	T=2.10
	894227-5390		9503-		AR	A B I S V W A B	T=2.12
	894227-5400		9503-		AR	A B I S V W A B	T=2.14
	894227-5410		9503-		AR	A B I S V W A B	T=2.16
	894227-5420		9503-		AR	A B I S V W A B	T=2.18
	894227-5430		9503-		AR	A B I S V W A B	T=2.20
	894227-5440		9503-		AR	A B I S V W A B	T=2.22
	894227-5450		9503-		AR	A B I S V W A B	T=2.24
	894227-5460		9503-		AR	A B I S V W A B	T=2.26
	894227-5470		9503-		AR	A B I S V W A B	T=2.28
	894227-5480		9503-		AR	A B I S V W A B	T=2.30
	894227-5490		9503-		AR	A B I S V W A B	T=2.32
	894227-5500		9503-		AR	A B I S V W A B	T=2.34
	894227-5510		9503-		AR	A B I S V W A B	T=2.36
	894227-5520		9503-		AR	A B I S V W A B	T=2.38
	894227-5530		9503-		AR	A B I S V W A B	T=2.40
	894227-5540		9503-		AR	A B I S V W A B	T=2.42
	894227-5550		9503-		AR	A B I S V W A B	T=2.44
	894227-5560		9503-		AR	A B I S V W A B	T=2.46
	894227-5570		9503-		AR	A B I S V W A B	T=2.48
	894227-5580		9503-		AR	A B I S V W A B	T=2.50
	894227-5590		9503-		AR	A B I S V W A B	T=2.52
	894227-5600		9503-		AR	A B I S V W A B	T=2.54
	894227-5610		9503-		AR	A B I S V W A B	T=2.56
	894227-5620		9503-		AR	A B I S V W A B	T=2.58
	894227-5630		9503-		AR	A B I S V W A B	T=2.60
	894227-5640		9503-		AR	A B I S V W A B	T=2.62
	894227-5650		9503-		AR	A B I S V W A B	T=2.64
	894227-5660		9503-		AR	A B I S V W A B	T=2.66
	894227-5670		9503-		AR	A B I S V W A B	T=2.68
	894227-5680		9503-		AR	A B I S V W A B	T=2.70
	894227-5690		9503-		AR	A B I S V W A B	T=2.72
	894227-5700		9503-		AR	A B I S V W A B	T=2.74
	894227-5710		9503-		AR	A B I S V W A B	T=2.76
	894227-5720		9503-		AR	A B I S V W A B	T=2.78
	894227-5730		9503-		AR	A B I S V W A B	T=2.80
	894227-5740		9503-		AR	A B I S V W A B	T=2.82
	894227-5750		9503-		AR	A B I S V W A B	T=2.84
	894227-5760		9503-		AR	A B I S V W A B	T=2.86

0-80 INJECTION PUMP

FIG-NO.

KEY NO | PART NAME

PART NUMBER	ITC	APPLIED DATE	LR	QTY	ABCDE	FGHIJ	KLMNO	PQRST	UVWXY	ZABCD	EFGHI	JKLMN	OPQRS	TUVWX	Remarks
					88888	88888	88888	88888	88888	88888	88888	88888	88888	888	
					99999	99999	99999	99999	99999	99999	99999	99999	99999	999	
					44444	44444	44444	44777	77777	77777	77777	77777	77777	777	
					33333	33334	44444	44000	00000	00000	00000	00011	11111	111	
					34466	78880	24446	67111	11222	23344	44466	88800	03333	677	
					51200	31884	81692	56114	57007	92923	89918	18904	84479	836	
					73937	21190	89727	91464	57370	92605	70155	55425	98882	082	
					00300	04963	04725	28722	77956	43582	92975	79260	27732	780	
					78466	98702	43515	94940	96070	91725	46251	39759	23424	421	
					10321	21002	21114	01001	00201	01101	00010	20112	01101	000	
91 SHIM: PLUNGER, INJ PUMP															
894227-5770		9503-		AR	A B	I		S	V W	A B					T=2.88
894227-5780		9503-		AR	A B	I		S	V W	A B					T=2.90
894227-5280		9503-		AR	A B	I		S	V W	B					T=1.90
894227-5290		9503-		AR	A B	I		S	V W	B					T=1.92
894227-5300		9503-		AR	A B	I		S	V W	B					T=1.94
894227-5310		9503-		AR	A B	I		S	V W	B					T=1.96
894227-5320		9503-		AR	A B	I		S	V W	B					T=1.98
894227-5330		9503-		AR	A B	I		S	V W	B					T=2.00
894227-5340		9503-		AR	A B	I		S	V W	B					T=2.02
894111-6580		9503-		AR	B	I		S	V W	B					T=1.74
894111-6590		9503-		AR	B	I		S	V W	B					T=1.76
894111-6600		9503-		AR	B	I		S	V W	B					T=1.78
894111-6610		9503-		AR	B	I		S	V W	B					T=1.80
894111-6620		9503-		AR	B	I		S	V W	B					T=1.82
894111-6630		9503-		AR	B	I		S	V W	B					T=1.84
894111-6640		9503-		AR	B	I		S	V W	B					T=1.86
894111-6650		9503-		AR	B	I		S	V W	B					T=1.88
894174-7510		9503-		AR		J		P							T=1.90
894174-7520		9503-		AR		J		P							T=1.92
894174-7530		9503-		AR		J		P							T=1.94
894174-7540		9503-		AR		J		P							T=1.96
894174-7550		9503-		AR		J		P							T=1.98
894174-7560		9503-		AR		J		P							T=2.00
894174-7570		9503-		AR		J		P							T=2.02
894174-7580		9503-		AR		J		P							T=2.04
894174-7590		9503-		AR		J		P							T=2.06
894174-7600		9503-		AR		J		P							T=2.08
894174-7610		9503-		AR		J		P							T=2.10
894174-7620		9503-		AR		J		P							T=2.12
894174-7630		9503-		AR		J		P							T=2.14
894174-7640		9503-		AR		J		P							T=2.16
894174-7650		9503-		AR		J		P							T=2.18
894174-7660		9503-		AR		J		P							T=2.20
894174-7670		9503-		AR		J		P							T=2.22
894174-7680		9503-		AR		J		P							T=2.24
894174-7690		9503-		AR		J		P							T=2.26
894174-7700		9503-		AR		J		P							T=2.28
894174-7710		9503-		AR		J		P							T=2.30
894174-7720		9503-		AR		J		P							T=2.32
894174-7730		9503-		AR		J		P							T=2.34
894174-7740		9503-		AR		J		P							T=2.36
894174-7750		9503-		AR		J		P							T=2.38
894174-7760		9503-		AR		J		P							T=2.40
894174-7770		9503-		AR		J		P							T=2.42
894174-7780		9503-		AR		J		P							T=2.44
894174-7790		9503-		AR		J		P							T=2.46
894174-7800		9503-		AR		J		P							T=2.48
894174-7810		9503-		AR		J		P							T=2.50
894174-7820		9503-		AR		J		P							T=2.52

INJECTION PUMP

0-80

FIG-NO.

KEY. NO	PART NAME / PART NUMBER	ITC	APPLIED DATE	LR	QTY											Remarks
						88888	88888	88888	88888	88888	88888	88888	88888	88888	888	
						99999	99999	99999	99999	99999	99999	99999	99999	99999	999	
						44444	44444	44444	44777	77777	77777	77777	77777	77777	777	
						33333	33334	44444	44000	00000	00000	00000	00011	11111	111	
						34466	78880	24446	67111	11222	23344	44466	88800	03333	677	
						51200	31884	81692	56114	57007	92923	89918	18904	84479	836	
						73937	21190	89727	91464	57370	92605	70155	55425	98882	082	
						00300	04963	04725	28722	77956	43582	92975	79260	27732	780	
						78466	98702	43515	94940	96070	91725	46251	39759	23424	421	
						10321	21002	21114	01001	00201	01101	00010	20112	01101	000	
						ABCDE	FGHIJ	KLMNO	PQRST	UVWXY	ZABCD	EFGHI	JKLMN	OPQRS	TUVWX	
91	SHIM; PLUNGER, INJ PUMP															
	894174-7830		9503-		AR		J		P							T=2.54
	894174-7840		9503-		AR		J		P							T=2.56
	894174-7850		9503-		AR		J		P							T=2.58
	894174-7860		9503-		AR		J		P							T=2.60
	894174-7870		9503-		AR		J		P							T=2.62
	894174-7880		9503-		AR		J		P							T=2.64
	894174-7890		9503-		AR		J		P							T=2.66
	894174-7900		9503-		AR		J		P							T=2.68
	894174-7910		9503-		AR		J		P							T=2.70
	894174-7920		9503-		AR		J		P							T=2.72
	894174-7930		9503-		AR		J		P							T=2.74
	894174-7940		9503-		AR		J		P							T=2.76
	894174-7950		9503-		AR		J		P							T=2.78
	894174-7960		9503-		AR		J		P							T=2.80
	894174-7970		9503-		AR		J		P							T=2.82
	894174-7980		9503-		AR		J		P							T=2.84
	894174-7990		9503-		AR		J		P							T=2.86
	894174-8000		9503-		AR		J		P							T=2.88
	894174-8010		9503-		AR		J		P							T=2.90
100	PIPE; FUEL INJ PUMP															
(B)	894418-0360		9503-		1	AB	IJ		S	VW	B					
(A)	894418-0350		9503-		1	AB	J			W						
(A)	894317-5130		9503-		1		I		S	V	AB					
(A)	894174-8210		9503-		1				P							
(B)	894317-5140		9503-		1						A					
102	VALVE; OVERFLOW, INJ PUMP															
(B)	894227-6440		9503-		1	AB	IJ		S	VW	AB					
(C)	897011-6871		9503-		1	C							MN	P		
(A)	894174-8200		9503-		1				P							
103	GASKET; OVERFLOW VALVE, INJ PUMP															
	894227-6450		9503-		2	AB	J			W	AB					
	115759-0010		9503-		1	C							MN	P		
	894433-6450		9503-		2		I		S	V						
	894169-5270		9503-		2				P							
105	BEARING; CM/SHF RR, INJ PUMP															
	900090-6770		9503-		1	CDE	FGH	KLMNO	Q T	U XY	Z CD	EFGHI	JKLMN	OPQRS	TUV	NSK
	509800-0380		9503-		1	CDE	FGH	KLMNO	Q T	U XY	Z CD	EFGHI	JKLMN	OPQRS	TUV	NTN
107	SHIM; RR BEARING, CM/SHF															
	515629-0150		9503-		AR	CDE	FGH	KLMNO	QR T	U XY	Z CD	EFGHI	JKLMN	OPQRS	TUV	T=0.10
	515629-0160		9503-		AR	CDE	FGH	KLMNO	QR T	U XY	Z CD	EFGHI	JKLMN	OPQRS	TUV	T=0.12
	515629-0170		9503-		AR	CDE	FGH	KLMNO	QR T	U XY	Z CD	EFGHI	JKLMN	OPQRS	TUV	T=0.14
	515629-0180		9503-		AR	CDE	FGH	KLMNO	QR T	U XY	Z CD	EFGHI	JKLMN	OPQRS	TUV	T=0.16
	515629-0190		9503-		AR	CDE	FGH	KLMNO	QR T	U XY	Z CD	EFGHI	JKLMN	OPQRS	TUV	T=0.18
	515629-0200		9503-		AR	CDE	FGH	KLMNO	QR T	U XY	Z CD	EFGHI	JKLMN	OPQRS	TUV	T=0.50

0-80 FIG-NO.	INJECTION PUMP

KEY NO / PART NAME

Model code columns (read vertically):

```
88888 88888 88888 88888 88888 88888 88888 88888 88888 888
99999 99999 99999 99999 99999 99999 99999 99999 99999 999
44444 44444 44444 44777 77777 77777 77777 77777 77777 777
33333 33334 44444 44000 00000 00000 00000 00011 11111 111
34466 78880 24446 67111 11222 23344 44466 88800 03333 677
51200 31884 81692 56114 57007 92923 89918 18904 84479 836
73937 21190 89727 91464 57370 92605 70155 55425 98882 082
00300 04963 04725 28722 77956 43582 92975 79260 27732 780
78466 98702 43515 94940 96070 91725 46251 39759 23424 421
10321 21002 21114 01001 00201 01101 00010 20112 01101 000
ABCDE FGHIJ KLMNO PQRST UVWXY ZABCD EFGHI JKLMN OPQRS TUVWX
```

KEY NO	PART NUMBER	ITC	APPLIED DATE	LR	QTY	Applicability	Remarks
107	SHIM; RR BEARING, CM/SHF						
	515629-0380		9503-		AR	CDE FGH KLMNO QR TU XYZ CD EFGHI JKLMN OPQRS TUV	T=1.00
	981225-0330		9503-		AR	CDE FGH KLMNO QR TU XYZ CD EFGHI JKLMN OPQRS TUV	T=0.30
	515619-0390		9503-		AR	CDE FGH KLMNO QR TU XYZ CD EFGHI JKLMN OPQRS TUV	T=0.70
	515629-0900		9503-		AR	CDE FGH KLMNO QR TU XYZ CD EFGHI JKLMN OPQRS TUV	T=1.40
	115639-0880		9503-		AR	CDE FGH KLMNO QR TU XYZ CD EFGHI JKLMN OPQRS TUV	T=2.40
	515629-0210		9503-		AR	PQ	T=0.30
	515629-0210		9503-9511		AR	S	T=0.30
109	RACK; CONT, INJ PUMP						
	515637-0020		9503-		1	CDE FGH KLMNO QR TU XYZ CD EFGHI JKLMN OPQRS TUV	
114	BEARING; CM/SHF FRT, INJ PUMP						
	900090-6770		9503-		1	CDE FGH KLMNO QR TU XYZ CD EFGHI JKLMN OPQRS TUV	NSK
	509800-0380		9503-		1	CDE FGH KLMNO QR TU XYZ CD EFGHI JKLMN OPQRS TUV	NTN
117	GASKET; EYE BOLT, INJ PUMP						
	894227-6450		9503-		3	AB J P AB	
	115759-0010		9503-		2	CDE FGH KLMNO QR TU XYZ CD EFGHI JKLMN OPQRS TUV	
	894433-6450		9503-		3	I S V	
	894227-6450		9503-9511		3	W	
	897119-1870		9512-		3	W	
	909592-0140		9503-		2	C E O	
118	BOLT; EYE, FUEL INL, INJ PUMP						
	894174-8240		9503-		1	AB J P W	
	115619-0820		9503-		1	CDE FGH KLMNO QR TU XYZ CD EFGHI JKLMN OPQRS TUV	
	894227-6600		9503-		1	I S V AB	
119	SPACER; FUEL INL, INJ PUMP						
	894227-6620		9503-		1	AB IJ P S VW AB	
126	ADAPTER; EYE BOLT, PUMP HSG						
	981235-0170		9503-		1	CDE FGH KLMNO QR TU XYZ CD EFGHI JKLMN OPQRS TUV	
127	ADAPTER; FUEL PIPE						
	515619-0440		9503-		1	CDE FGH KLMNO R TU XYZ CD EFGHI JKLMN OPQRS TUV	
130	SCREW; FRT COVER TO HSG						
	901900-6140		9503-		4	CDE FGH KLMNO QR TU XYZ CD EFGHI JKLMN OPQRS TUV	M6X14 W/LK WASHER
148	GASKET; COVER FIX BOLT						
	981215-1440		9503-		2	CDE FGH KLMNO QR TU XYZ CD EFGHI JKLMN OPQRS TUV	
155	BOLT; AIR BLEED, INJ PUMP						
	115619-0240		9503-		1	CDE FGH KLMNO QR TU XYZ CD EFGHI JKLMN OPQRS TUV	
159	RING; RR BEARING, CM/SHF, INJ PUMP						
	981225-0470		9503-		1	CDE FGH KLMNO QR TU XYZ CD EFGHI JKLMN OPQRS TUV	
162	SHIM; FRT BRG, CM/SHF						
	515629-0150		9503-		AR	CDE FGH KLMNO QR TU XYZ CD EFGHI JKLMN OPQRS TUV	T=0.10

INJECTION PUMP

FIG-NO. 0-80

Model code columns (header, read vertically per column A–X):

```
88888|88888|88888|88888|88888|88888|88888|88888|88888|888
99999|99999|99999|99999|99999|99999|99999|99999|99999|999
44444|44444|44444|44777|77777|77777|77777|77777|77777|777
33333|33333|44444|44000|00000|00000|00000|00011|11111|111
34466|78880|24446|67111|11222|23344|44466|88800|03333|677
51200|31884|81692|56114|57007|92923|89918|18904|84479|836
73937|21190|89727|91464|57370|92605|70155|55425|98882|082
00300|04963|04725|28722|77956|43582|92975|79260|27732|780
78466|98702|43515|94940|96070|91725|46251|39759|23424|421
10321|21002|21114|01001|00201|01101|00010|20112|01101|000
ABCDE|FGHIJ|KLMNO|PQRST|UVWXY|ZABCD|EFGHI|JKLMN|OPQRS|TUVWX
```

KEY. NO	PART NAME / PART NUMBER	ITC	APPLIED DATE	LR	QTY	Applicable models	Remarks
162	SHIM; FRT BRG, CM/SHF						
	515629-0160		9503-		AR	C D E F G H K L M N O Q R T U X Y Z C D E F G H I J K L M N O P Q R S T U V	T=0.12
	515629-0170		9503-		AR	C D E F G H K L M N O Q R T U X Y Z C D E F G H I J K L M N O P Q R S T U V	T=0.14
	515629-0180		9503-		AR	C D E F G H K L M N O Q R T U X Y Z C D E F G H I J K L M N O P Q R S T U V	T=0.16
	515629-0190		9503-		AR	C D E F G H K L M N O Q R T U X Y Z C D E F G H I J K L M N O P Q R S T U V	T=0.18
	515629-0200		9503-		AR	C D E F G H K L M N O Q R T U X Y Z C D E F G H I J K L M N O P Q R S T U V	T=0.50
	515629-0380		9503-		AR	C D E F G H K L M N O Q R T U X Y Z C D E F G H I J K L M N O P Q R S T U V	T=1.00
	981225-0330		9503-		AR	C D E F G H K L M N O Q R T U X Y Z C D E F G H I J K L M N O P Q R S T U V	T=0.30
	515619-0390		9503-		AR	C D E F G H K L M N O Q R T U X Y Z C D E F G H I J K L M N O P Q R S T U V	T=0.70
	515629-0900		9503-		AR	C D E F G H K L M N O Q R T U X Y Z C D E F G H I J K L M N O P Q R S T U V	T=1.40
	115639-0880		9503-		AR	C D E F G H K L M N O Q R T U X Y Z C D E F G H I J K L M N O P Q R S T U V	T=2.40
163	COUPLING; INJ PUMP						
	894227-3371		9503-		1	A B J P V W B	
	894364-5300		9503-		1	I S A	
164	BOLT; GEAR TO COUPLING						
	515619-1120		9503-		6	A B I S V A B	
	515729-0580		9503-		6	J P	
	515619-1120		9503-9511		6	W	
	901910-6180		9512-		6	W	M6X18
167	BOLT; CONT RACK, INJ PUMP						
	115639-0030		9503-		1	C D E F G H K L M N O Q R T U X Y Z C D E F G H I J K L M N O P Q R S T U V	
175	STOPPER; SPR						
	894174-8040		9503-		4	A B I J P S W A B	
176	PLATE; LK, DELIVERY VALVE HOLDER						
	515625-0010		9503-		2	C D E F G H K L M N O Q R T U X Y Z C D E F G H I J K L M N O P Q R S T U V	
177	PINION; CONT SLEEVE, INJ PUMP						
	981225-0570		9503-		4	C D E F G H K L M N O Q R T U X Y Z C D E F G H I J K L M N O P Q R S T U V	
178	SCREW; PINION, INJ PUMP						
	981235-0030		9503-		4	C D E F G H K L M N O Q R T U X Y Z C D E F G H I J K L M N O P Q R S T U V	
181	SHIM; TAPPET, INJ PUMP						
	515619-0340		9503-		AR	C D E F G H K L M N O Q R T U X Y Z C D E F G H I J K L M N O P Q R S T U V	T=0.30
	515619-0350		9503-		AR	C D E F G H K L M N O Q R T U X Y Z C D E F G H I J K L M N O P Q R S T U V	T=0.40
	515619-0360		9503-		AR	C D E F G H K L M N O Q R T U X Y Z C D E F G H I J K L M N O P Q R S T U V	T=0.50
	515619-0010		9503-		AR	C D E F G H K L M N O Q R T U X Y Z C D E F G H I J K L M N O P Q R S T U V	T=0.60
	515619-0020		9503-		AR	C D E F G H K L M N O Q R T U X Y Z C D E F G H I J K L M N O P Q R S T U V	T=0.70
	515619-0030		9503-		AR	C D E F G H K L M N O Q R T U X Y Z C D E F G H I J K L M N O P Q R S T U V	T=0.80
	515619-0040		9503-		AR	C D E F G H K L M N O Q R T U X Y Z C D E F G H I J K L M N O P Q R S T U V	T=0.90
	515619-0050		9503-		AR	C D E F G H K L M N O Q R T U X Y Z C D E F G H I J K L M N O P Q R S T U V	T=1.00
	515619-0070		9503-		AR	C D E F G H K L M N O Q R T U X Y Z C D E F G H I J K L M N O P Q R S T U V	T=1.10
	515619-0080		9503-		AR	C D E F G H K L M N O Q R T U X Y Z C D E F G H I J K L M N O P Q R S T U V	T=1.20
	515619-0090		9503-		AR	C D E F G H K L M N O Q R T U X Y Z C D E F G H I J K L M N O P Q R S T U V	T=1.30
	515619-0100		9503-		AR	C D E F G H K L M N O Q R T U X Y Z C D E F G H I J K L M N O P Q R S T U V	T=1.40

0-80 INJECTION PUMP

FIG-NO.

KEY. NO	PART NAME / PART NUMBER	I T C	APPLIED DATE	L R	Q T Y	Applicability	Remarks
						88888 88888 88888 88888 88888 88888 88888 88888 88888 888 99999 99999 99999 99999 99999 99999 99999 99999 99999 999 44444 44444 44444 44777 77777 77777 77777 77777 77777 777 33333 33334 44444 44000 00000 00000 00000 00011 11111 111 34466 78880 24446 67111 11222 23344 44466 88800 03333 677 51200 31884 81692 56114 57007 92923 89918 18904 84479 836 73937 21190 89727 91464 57370 92605 70155 55425 98882 082 00300 04963 04725 28722 77956 43582 92975 79260 27732 780 78466 98702 43515 94940 96070 91725 46251 39759 23424 421 10321 21002 21114 01001 00201 01101 00010 20112 01101 000 ABCDE FGHIJ KLMNO PQRST UVWXY ZABCD EFGHI JKLMN OPQRS TUVWX	
181	SHIM: TAPPET, INJ PUMP						
	515619-0110		9503-		AR	CDE FGH KLMNO QR T U XY Z CD EFGHI JKLMN OPQRS TUV	T=0.55
	515619-0120		9503-		AR	CDE FGH KLMNO QR T U XY Z CD EFGHI JKLMN OPQRS TUV	T=0.65
	515619-0130		9503-		AR	CDE FGH KLMNO QR T U XY Z CD EFGHI JKLMN OPQRS TUV	T=0.75
	515619-0150		9503-		AR	CDE FGH KLMNO QR T U XY Z CD EFGHI JKLMN OPQRS TUV	T=0.85
	981235-0420		9503-		AR	CDE FGH KLMNO QR T U XY Z CD EFGHI JKLMN OPQRS TUV	T=0.95
	981235-0430		9503-		AR	CDE FGH KLMNO QR T U XY Z CD EFGHI JKLMN OPQRS TUV	T=1.05
	981235-0440		9503-		AR	CDE FGH KLMNO QR T U XY Z CD EFGHI JKLMN OPQRS TUV	T=1.15
	981235-0450		9503-		AR	CDE FGH KLMNO QR T U XY Z CD EFGHI JKLMN OPQRS TUV	T=1.25
	515619-1060		9503-		AR	CDE FGH KLMNO QR T U XY Z CD EFGHI JKLMN OPQRS TUV	T=1.50
	515619-1070		9503-		AR	CDE FGH KLMNO QR T U XY Z CD EFGHI JKLMN OPQRS TUV	T=1.60
	515619-0250		9503-		AR	CDE FGH KLMNO QR T U XY Z CD EFGHI JKLMN OPQRS TUV	T=0.20
	515619-0260		9503-		AR	CDE FGH KLMNO QR T U XY Z CD EFGHI JKLMN OPQRS TUV	T=0.25
	515619-0270		9503-		AR	CDE FGH KLMNO QR T U XY Z CD EFGHI JKLMN OPQRS TUV	T=0.35
	515619-0370		9503-		AR	CDE FGH KLMNO QR T U XY Z CD EFGHI JKLMN OPQRS TUV	T=0.45
	515619-1080		9503-		AR	CDE FGH KLMNO QR T U XY Z CD EFGHI JKLMN OPQRS TUV	T=1.35
	515619-1090		9503-		AR	CDE FGH KLMNO QR T U XY Z CD EFGHI JKLMN OPQRS TUV	T=1.45
	515619-1100		9503-		AR	CDE FGH KLMNO QR T U XY Z CD EFGHI JKLMN OPQRS TUV	T=1.55
194	BOLT: TIMING PLATE						
	894389-4450		9503-		1	I S A	
197	PICKUP: INJ PUMP						
	894440-2810		9503-		1	E F H KLMNO C E G O R V	
201	PLATE: TIMING						
	894457-4780		9503-		1	I S A	
246	ROLLER KIT: INJ PUMP						
	897163-1720		9512-		1	W	

MEMO

0-81	GOVERNOR; INJECTION PUMP
FIG-NO.	(NO.1)

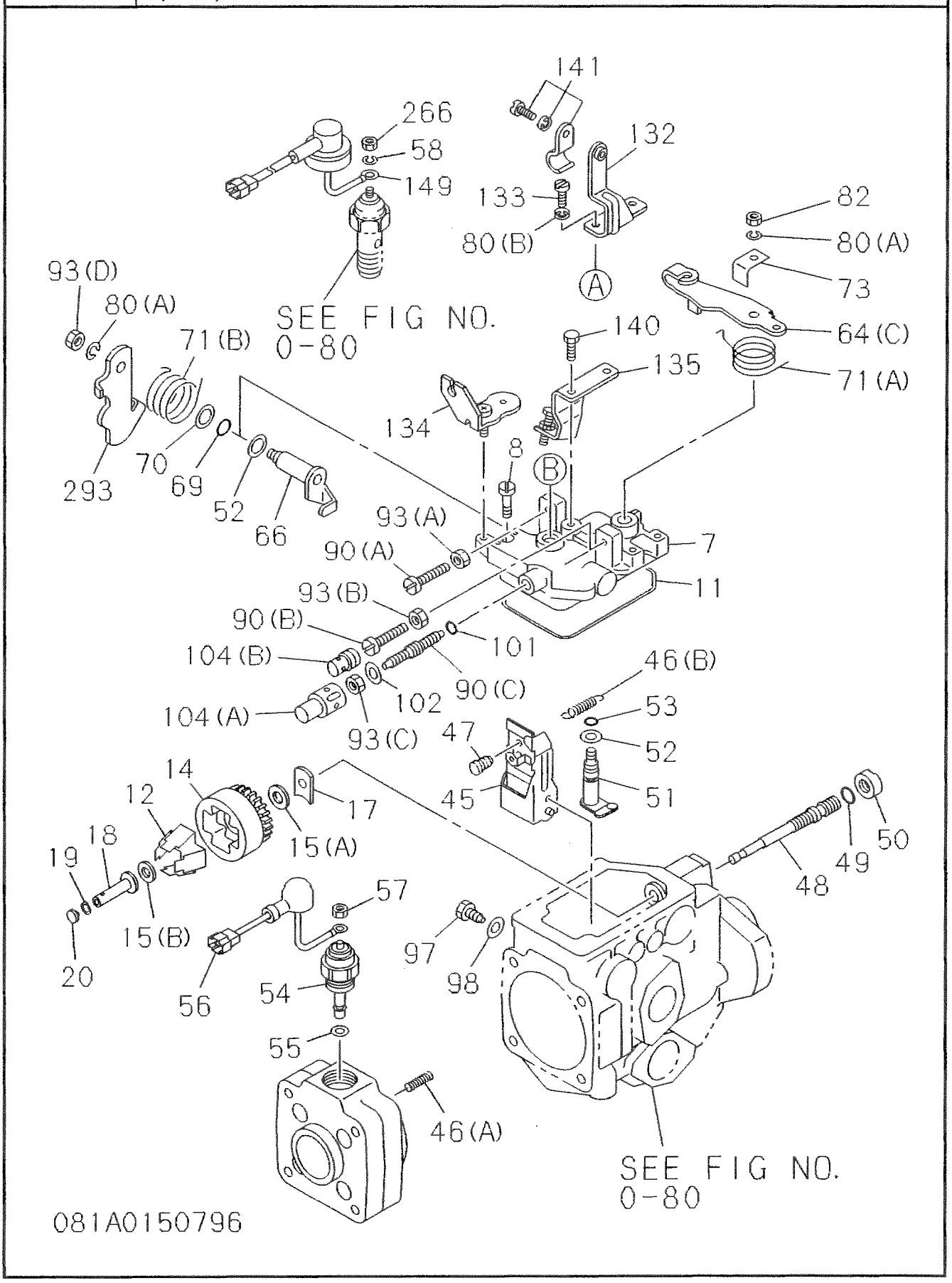

GOVERNOR; INJECTION PUMP

(NO.2)

0-81

FIG-NO.

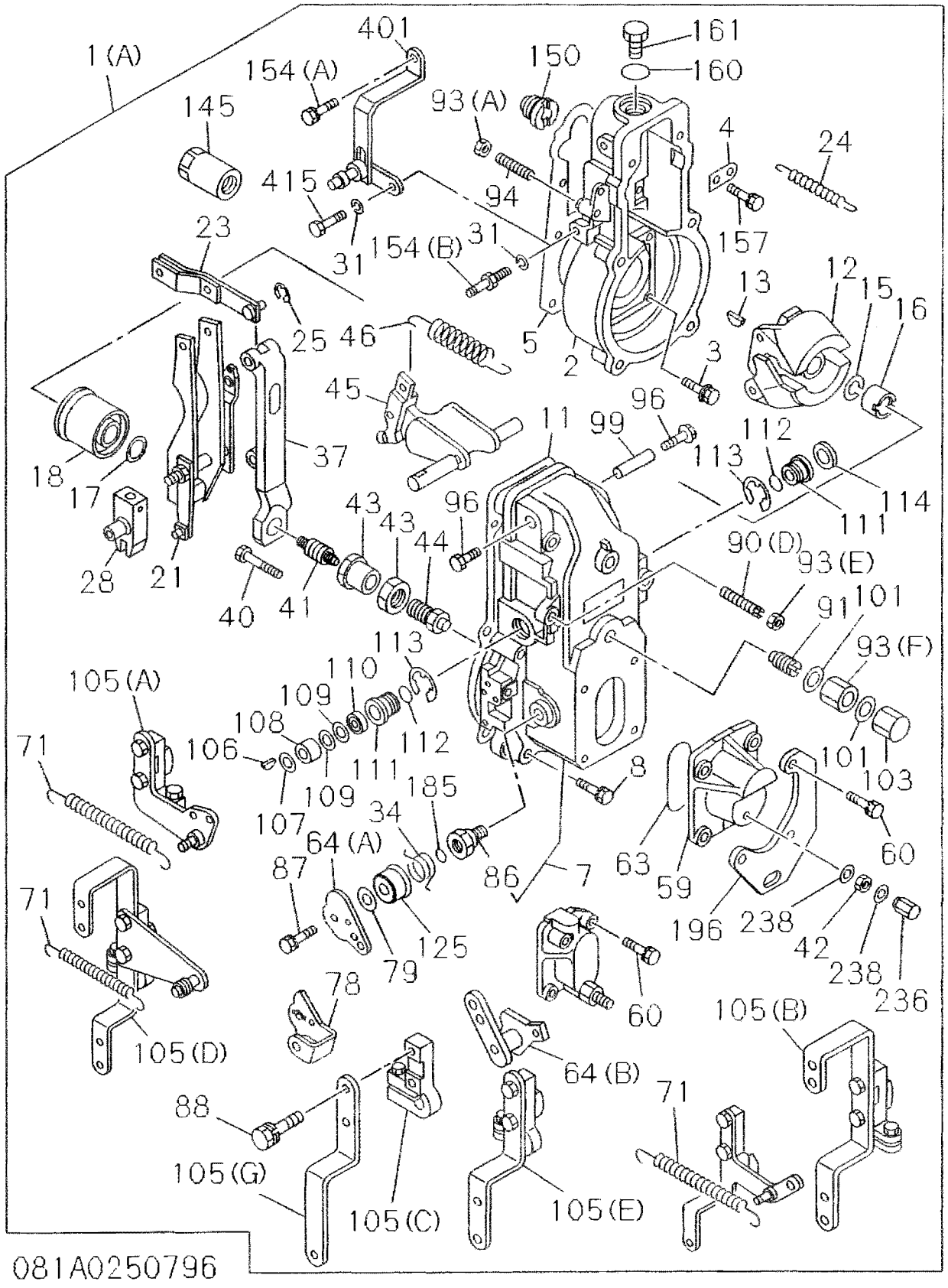

0-81	GOVERNOR; INJECTION PUMP
FIG-NO.	(NO.3)

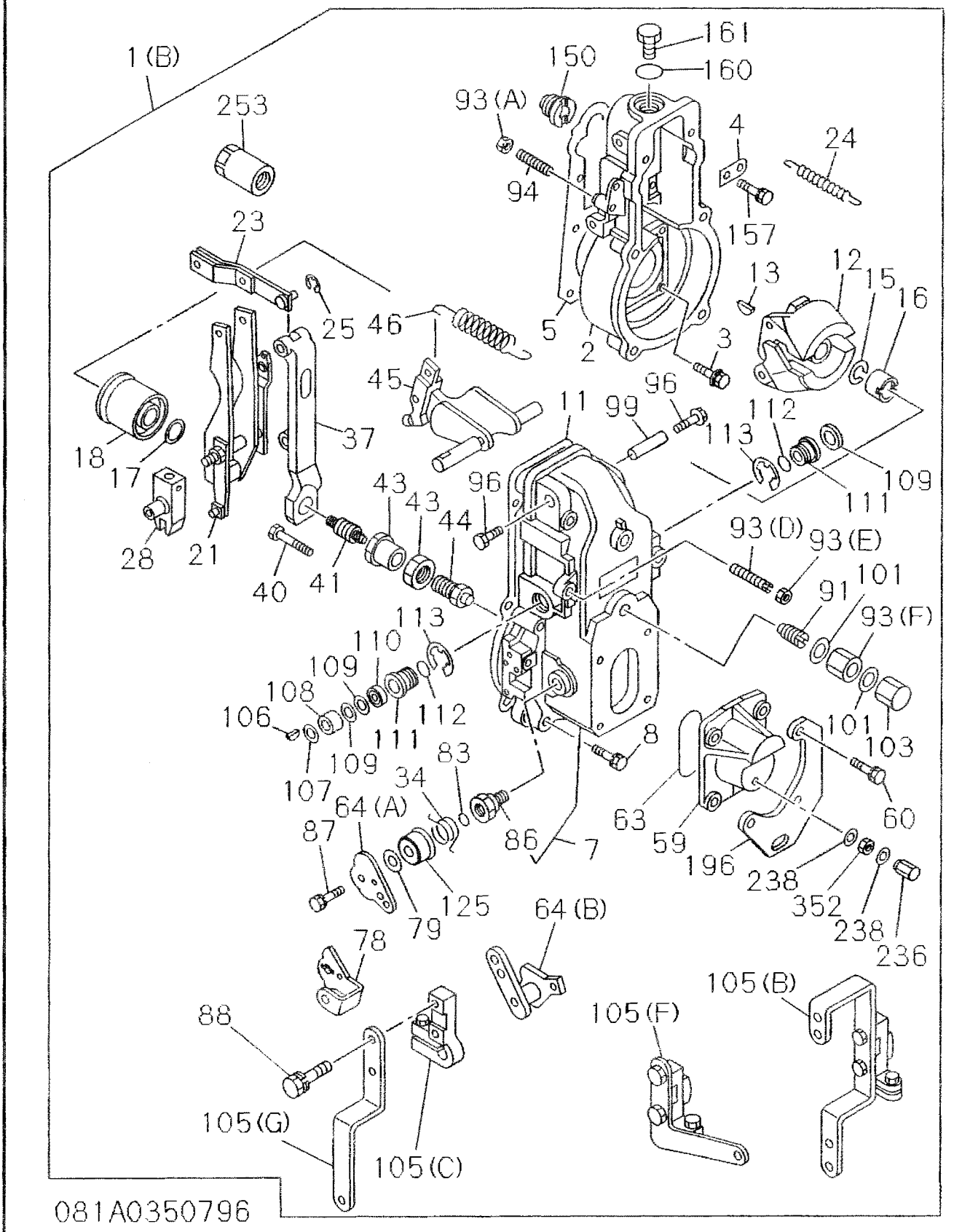

GOVERNOR; INJECTION PUMP

0-81
FIG-NO.

KEY. NO | PART NAME

Model code header (columns read top to bottom):

88888 88888 88888 88888 88888 88888 88888 88888 88888 888
99999 99999 99999 99999 99999 99999 99999 99999 99999 999
44444 44444 44444 44777 77777 77777 77777 77777 77777 777
33333 33334 44444 44000 00000 00000 00000 00011 11111 111
34466 78880 24446 67111 11222 23344 44466 88800 03333 677
51200 31884 81692 56114 57007 92923 89918 18904 84479 836
73937 21190 89727 91464 57370 92605 70155 55425 98882 082
00300 04963 04725 28722 77956 43582 92975 79260 27732 780
78466 98702 43515 94940 96070 91725 46251 39759 23424 421
10321 21002 21114 01001 00201 01101 00010 20112 01101 000
ABCDE FGHIJ KLMNO PQRST UVWXY ZABCD EFGHI JKLMN OPQRS TUVWX

KEY NO	PART NUMBER	ITC	APPLIED DATE	LR	QTY	Models	Remarks
1	GOVERNOR ASM; INJ PUMP						
(A)	894362-2611		9503-		1	C	
(A)	894360-7050		9503-		1	D Z	
(A)	894441-9441		9503-		1	E L	
(A)	897037-2400		9503-		1	F	
(B)	894381-1491		9503-		1	G R	
(A)	894450-1081		9503-		1	H R	
(A)	894450-1070		9503-		1	K	
(A)	897019-7230		9503-		1	M	
(A)	894458-0281		9503-		1	N	
(A)	894337-7771		9503-		1	O I	
(A)	894178-8420		9503-		1	Q	
(A)	894360-2530		9503-		1	T	
(A)	897023-9550		9503-		1	U	
(A)	894389-2310		9503-		1	X	
(A)	897031-8860		9503-		1	Y	
(A)	897042-0840		9503-		1	C	
(A)	897026-5351		9503-		1	D	
(A)	897048-7950		9503-		1	E	
(A)	897049-0270		9503-		1	F	
(B)	897049-3270		9503-		1	G	
(A)	897072-5411		9503-		1	H	
(B)	897086-2771		9503-		1	J L	
(B)	897088-6010		9503-		1	K	
(A)	897100-2670		9503-9603		1	M	
(A)	897100-2671		9604-		1	M	
(B)	897104-5100		9503-9603		1	N	
(B)	897104-5102		9604-		1	N	
(B)	897108-9240		9503-		1	O	
(A)	897146-8080		9503-9612		1	P	
(A)	897146-8081		9701-		1	P	
(A)	897149-9710		9503-		1	Q S	
(A)	897168-0750		9503-		1	T	
(A)	897173-8840		9503-		1	U	
(B)	897149-9720		9503-		1	V	
2	HOUSING; GOV, INJ PUMP						
	115721-1040		9503-		1	C E F H K L M N O Q R T U X Y C D E F H I M P Q S T U	
	115721-0300		9503-		1	D Z	
	115721-1040		9503-		1	G G J K L N O R V	
3	BOLT; GOV HSG, INJ PUMP						
	515729-0270		9503-		6	C D E F H K L M N O Q R T U X Y Z C D E F H I M P Q S T U	M6X15
	515729-0270		9503-		6	G G J K L N O R V	M6X15
4	PLATE; START SPRING, GOV						
	891325-3970		9503-		1	C D E F H K L M N O Q R T U X Y Z C D E F H I M P Q S T U	
	891325-3970		9503-		1	G G J K L N O R V	
5	GASKET; GOV TO INJ PUMP HSG						
	515729-0010		9503-		1	C E F L N O Q C D E F I	

0-81 GOVERNOR; INJECTION PUMP

FIG-NO.

KEY. NO	PART NAME / PART NUMBER	I T C	APPLIED DATE	L R	QTY	88888888888888888888888888888888888888888888888888888888 99999999999999999999999999999999999999999999999999999999 44444444444444444777777777777777777777777777777777777777 33333333334444444400000000000000000000000011111111111111 34466788802444667111111222233344444668880003333677 51200318848169256114570079292389918189048447983 6 73937211908972791464573709260570155554259888208 2 00300049630472528722779564358292975792602773279 0 78466987024351594940960709172546251397592342442 1 10321210022111401001002010110100010201120110100 0 ABCDEFGHIJKLMNOPQRSTUVWXYZABCDEFGHIJKLMNOPQRSTUVWX	Remarks
5	GASKET; GOV TO INJ PUMP HSG						
	515729-0001		9503-		1	D H K M R TU XYZ H	
	515729-0010		9503-		1	G G R	
	115779-0930		9503-		1	JKL NO V	
	115779-0930		9503-		1	M PQ STU	
7	COVER; GOV HSG, INJ PUMP						
	894327-3360		9503-		1	AB W	
	115721-0140		9503-		1	CDEF H KLMNO QR TU XYZ CDEF HI M PQ STU	
	115721-0140		9503-		1	G G JKL NO R V	
	894386-5930		9503-		1	I S V AB	
	894418-0320		9503-		1	J	
	894174-8400		9503-		1	P	
8	BOLT; GOV COVER, INJ PUMP						
	894227-6360		9503-		4	AB IJ P S VW AB	
	515729-0540		9503-		2	CDEF H KLMNO QR TU XYZ CDEF HI M PQ STU	
	515729-0330		9503-		4	CDEF H KLMNO QR TU XYZ CDEF HI M PQ STU	
	515729-0540		9503-		2	G G JKL NO R V	
	515729-0330		9503-		4	G G JKL NO R V	
11	GASKET; COVER TO HSG, GOV						
	894227-5990		9503-		1	AB IJ P S V AB	
	115729-0020		9503-		1	CDEF H KLMNO QR TU XYZ CDEF HI	
	115729-0020		9503-		1	G G R	
	894227-5990		9503-9511		1	W	
	897136-4130		9512-		1	W	
	115779-0940		9503-		1	JKL NO V	
	115779-0940		9503-		1	M PQ STU	
12	FLYWEIGHT ASM; GOV						
	894228-4030		9503-		1	AB J P W	
	115722-0170		9503-		1	CDEF LM Q T XYZ D H M PQ STU	
	894427-8470		9503-		1	G K R	
	894427-8470		9503-		1	H K NO R U I	
	894408-5420		9503-		1	I S V AB	
	115722-0210		9503-		1	C EF	
	115722-0170		9503-		1	G J L N V	
	115722-0210		9503-		1	O	
13	KEY; FLYWEIGHT, GOV						
	519619-0490		9503-		1	CDEF H KLMNO QR TU XYZ CDEF HI M PQ STU	16MM
	519619-0490		9503-		1	G G JKL NO R V	16MM
14	HOLDER; GOV FLYWEIGHT, INJ PUMP						
	894227-6130		9503-		1	AB IJ P S VW AB	
15	WASHER; LK, FLYWEIGHT FIX, GOV						
	894227-6120		9503-		1	AB IJ P S VW AB	
(A)	894227-6140		9503-		1	AB J P W	

GOVERNOR; INJECTION PUMP

0-81

FIG-NO.

KEY. NO	PART NAME / PART NUMBER	ITC	APPLIED DATE	LR	QTY	88888 88888 88888 88888 88888 88888 88888 88888 88888 888 99999 99999 99999 99999 99999 99999 99999 99999 99999 999 44444 44444 44444 44777 77777 77777 77777 77777 77777 777 33333 33334 44444 44000 00000 00000 00000 00011 11111 111 34466 78880 24446 67111 11222 23344 44466 88800 03333 677 51200 31884 81692 56114 57007 92923 89918 18904 84479 836 73937 21190 89727 91464 57370 92605 70155 55425 98882 082 00300 04963 04725 28722 77956 43582 92975 79260 27732 780 78466 98702 43515 94940 96070 91725 46251 39759 23424 421 10321 21002 21114 01001 00201 01101 00010 20112 01101 000 ABCDE FGHIJ KLMNO PQRST UVWXY ZABCD EFGHI JKLMN OPQRS TUVWX	Remarks
15	WASHER; LK. FLYWEIGHT FIX, GOV						
	515729-0340		9503-		1	CDE FH KLMNO QR T U XY Z CD EF HI M PQ S TU	
	515729-0340		9503-		1	G G JKL N O R V	
(B)	894408-5170		9503-		1	I S V AB	
16	NUT; FLYWEIGHT FIX, GOV						
	981325-0860		9503-		1	CDE FH KLMNO QR T U XY Z CD EF HI M PQ S TU	
	981325-0860		9503-		1	G G JKL N O R V	
17	SHIM; FLYWEIGHT SLEEVE, GOV						
	894227-6070		9503-		AR	AB IJ P S VW AB	T=1.05
	894227-6080		9503-		AR	AB IJ P S VW AB	T=1.25
	894227-6090		9503-		AR	AB IJ P S VW AB	T=1.45
	894227-6100		9503-		AR	AB IJ P S VW AB	T=1.65
	894227-6110		9503-		AR	AB IJ P S VW AB	T=1.85
	894231-1230		9503-		AR	AB IJ P S VW B	T=1.15
	894231-1240		9503-		AR	AB IJ P S VW B	T=1.35
	894231-1250		9503-		AR	AB IJ P S VW B	T=1.55
	894231-1260		9503-		AR	AB IJ P S VW B	T=1.75
	981325-0880		9503-		AR	CDE FH KLMNO QR T U XY Z CD EF HI M PQ S TU	T=0.20
	981325-5510		9503-		AR	CDE FH KLMNO QR T U XY Z CD EF HI M PQ S TU	T=0.30
	981325-5520		9503-		AR	CDE FH KLMNO QR T U XY Z CD EF HI M PQ S TU	T=0.40
	981325-5530		9503-		AR	CDE FH KLMNO QR T U XY Z CD EF HI M PQ S TU	T=1.00
	515729-2860		9503-		AR	CDE FH KLMNO QR T U XY Z CD EF HI M PQ S TU	T=0.50
	515729-2870		9503-		AR	CDE FH KLMNO QR T U XY Z CD EF HI M PQ S TU	T=1.50
	115729-8910		9503-		AR	CDE FH KLMNO QR T U XY Z CD EF HI M PQ S TU	T=2.00
	115729-8920		9503-		AR	CDE FH KLMNO QR T U XY Z CD EF HI M PQ S TU	T=3.00
	115729-8930		9503-		AR	CDE FH KLMNO QR T U XY Z CD EF HI M PQ S TU	T=4.00
	981325-0880		9503-		AR	G G JKL N O R V	T=0.20
	981325-5510		9503-		AR	G G JKL N O R V	T=0.30
	981325-5520		9503-		AR	G G JKL N O R V	T=0.40
	981325-5530		9503-		AR	G G JKL N O R V	T=1.00
	515729-2860		9503-		AR	G G JKL N O R V	T=0.50
	515729-2870		9503-		AR	G G JKL N O R V	T=1.50
	115729-8910		9503-		AR	G G JKL N O R V	T=2.00
	115729-8920		9503-		AR	G G JKL N O R V	T=3.00
	115729-8930		9503-		AR	G G JKL N O R V	T=4.00
18	SLEEVE; GOV						
	894339-9712		9503-		1	AB	
	515729-3720		9503-		1	C E FH LMNO QR U XY CD EF I TU	
	115729-3720		9503-		1	D K T Z H M Q S	
	515729-3720		9503-		1	G G JKL N O R V	
	894333-2220		9503-		1	I S V	
	894174-8130		9503-		1	J P	
	894339-7120		9503-9511		1	W	
	894339-9712		9512-		1	W	
	894433-2220		9503-		1	AB	
	115729-3720		9503-9612		1	P	
	515729-3720		9701-		1	P	

0-81 GOVERNOR; INJECTION PUMP

FIG-NO.

KEY. NO — PART NAME

Model code columns (header digits, read row by row):

```
88888|88888|88888|88888|88888|88888|88888|88888|88888|888
99999|99999|99999|99999|99999|99999|99999|99999|99999|999
44444|44444|44444|44777|77777|77777|77777|77777|77777|777
33333|33334|44444|44000|00000|00000|00000|00011|11111|111
34466|78880|24446|67111|11222|23344|44466|88800|03333|677
51200|31884|81692|56114|57007|92923|89918|18904|84479|836
73937|21190|89727|91464|57370|92605|70155|55425|98882|082
00300|04963|04725|28722|77956|43582|92975|79260|27732|780
78466|98702|43515|94940|96070|91725|46251|39759|23424|421
10321|21002|21114|01001|00201|01101|00010|20112|01101|000
ABCDE|FGHIJ|KLMNO|PQRST|UVWXY|ZABCD|EFGHI|JKLMN|OPQRS|TUVWX
```

KEY NO	PART NUMBER	ITC	APPLIED DATE	LR	QTY	Applicable models	Remarks
19	CAP; GOV SLEEVE, INJ PUMP						
	894227-6160		9503-		1	A B J P W	
	894408-5190		9503-		1	I S V A B	
20	PLUG; CLOSING, GOV SLEEVE						
	894428-8680		9503-		1	A B I S V W A B	L=2. 20
	894408-5210		9503-		1	A B I S V W A B	L=2. 30
	894428-8690		9503-		1	A B I S V W A B	L=2. 40
	894408-5220		9503-		1	A B I S V W A B	L=2. 50
	894428-8700		9503-		1	A B I S V W A B	L=2. 60
	894408-5230		9503-		1	A B I S V W A B	L=2. 70
	894428-8710		9503-		1	A B I S V W A B	L=2. 80
	894408-5240		9503-		1	A B I S V W A B	L=2. 90
	894428-8720		9503-		1	A B I S V W A B	L=3. 00
	894408-5250		9503-		1	A B I S V W A B	L=3. 10
	894428-8730		9503-		1	A B I S V W A B	L=3. 20
	894408-5260		9503-		1	A B I S V W A B	L=3. 30
	894428-8740		9503-		1	A B I S V W A B	L=3. 40
	894408-5270		9503-		1	A B I S V W A B	L=3. 50
	894428-8750		9503-		1	A B I S V W A B	L=3. 60
	894408-5280		9503-		1	A B I S V W A B	L=3. 70
	894428-8760		9503-		1	A B I S V W A B	L=3. 80
	894408-5200		9503-		1	A B I S V W B	L=2. 10
	894408-5290		9503-		1	A B I S V W B	L=3. 90
	894428-8770		9503-		1	A B I S V W B	L=4. 00
	894408-5300		9503-		1	A B I S V W B	L=4. 10
	894428-8780		9503-		1	A B I S V W B	L=4. 20
	894408-5310		9503-		1	A B I S V W B	L=4. 30
	894428-8790		9503-		1	A B I S V W B	L=4. 40
	894408-5320		9503-		1	A B I S V W B	L=4. 50
	894428-8800		9503-		1	A B I S V W B	L=4. 60
	894408-5330		9503-		1	A B I S V W B	L=4. 70
	894428-8810		9503-		1	A B I S V W B	L=4. 80
	894408-5340		9503-		1	A B I S V W B	L=4. 90
	894428-8820		9503-		1	A B I S V W B	L=5. 00
	894408-5350		9503-		1	A B I S V W B	L=5. 10
	894372-4990		9503-		1	A B I S V W B	L=5. 20
	894372-5000		9503-		1	A B I S V W B	L=5. 30
	894372-5010		9503-		1	A B I S V W B	L=5. 40
	894372-5020		9503-		1	A B I S V W B	L=5. 50
	894227-6170		9503-		1	J P	L=1. 70
	894227-6180		9503-		1	J P	L=1. 90
	894227-6190		9503-		1	J P	L=2. 10
	894227-6200		9503-		1	J P	L=2. 30
	894227-6210		9503-		1	J P	L=2. 50
	894227-6220		9503-		1	J P	L=2. 70
	894227-6230		9503-		1	J P	L=2. 90
	894227-6240		9503-		1	J P	L=3. 10
	894227-6250		9503-		1	J P	L=3. 30
	894227-6260		9503-		1	J P	L=3. 50

GOVERNOR; INJECTION PUMP

0-81
FIG-NO.

KEY NO | PART NAME

Applicability code columns (read vertically, each column = one model code; letter row below):

```
88888888888888888888888888888888888888888888888
99999999999999999999999999999999999999999999999
44444444444444444777777777777777777777777777777
33333333344444444000000000000000000000011111111111
34466788802444667111112222333444446688800033336 77
51200318848169256114570079292389918189048447983 6
73937211908972791464573709260570155554259888208 2
00300049630472528722779564358292975792602773278 0
78466987024351594940960709172546251397592342442 1
10321210022111401001002010110100010201120110100 0
```

Header digit groups (10 groups):	88888 88888 88888 88888 88888 88888 88888 88888 88888 888 / 99999 99999 99999 99999 99999 99999 99999 99999 99999 999 / 44444 44444 44444 44777 77777 77777 77777 77777 77777 777 / 33333 33334 44444 44000 00000 00000 00000 00011 11111 111 / 34466 78880 24446 67111 11222 23344 44466 88800 03333 677 / 51200 31884 81692 56114 57007 92923 89918 18904 84479 836 / 73937 21190 89727 91464 57370 92605 70155 55425 98882 082 / 00300 04963 04725 28722 77956 43582 92975 79260 27732 780 / 78466 98702 43515 94940 96070 91725 46251 39759 23424 421 / 10321 21002 21114 01001 00201 01101 00010 20112 01101 000
Letter row:	ABCDE FGHIJ KLMNO PQRST UVWXY ZABCD EFGHI JKLMN OPQRS TUVWX

KEY NO	PART NUMBER	ITC	APPLIED DATE	LR	QTY	Applicability	Remarks
20	PLUG; CLOSING, GOV SLEEVE						
	894227-6270		9503-		1	J P	L=3.70
	894227-6280		9503-		1	J P	L=3.90
	894227-6290		9503-		1	J P	L=4.10
	894227-6300		9503-		1	J P	L=4.30
	894227-6310		9503-		1	J P	L=4.50
	894227-6320		9503-		1	J P	L=4.70
	894227-6330		9503-		1	J P	L=4.90
	894227-6340		9503-		1	J P	L=5.10
21	LEVER ASM; GUIDE, GOV						
	115725-0150		9503-		1	CDE F H KLMNO QR T U XY Z D HI M PQ S TU	
	115725-0150		9503-		1	G G JKL N R V	
	515725-0470		9503-		1	C EF	
	515725-0470		9503-		1	O	
23	LINK; LEVER TO CONT RACK, GOV						
	115725-0110		9503-		1	CDE F H KLMNO QR T U XY Z CD EF HI M PQ S TU	
	115725-0110		9503-		1	G G JKL O R	
	115725-0110		9604-		1	N	
24	SPRING; START, GOV, INJ PUMP						
	981322-2350		9503-		1	CDE F H KLMNO QR T U XY Z CD EF HI M PQ S TU	
	981322-2350		9503-		1	G G JKL N O R V	
25	RING; SNAP						
	909185-4040		9503-		1	CDE F H KLMNO QR T U XY Z CD EF HI M PQ S TU	ID=4
	909185-4040		9503-		1	G G JKL O R	ID=4
	909185-4040		9604-		1	N	ID=4
28	LEVER; SUPPORTING, GOV						
	115725-0170		9503-		1	CDE F H KLMNO QR T U XY Z CD EF HI M PQ S TU	
	115725-0170		9503-		1	G G JKL N O R V	
31	WASHER; LK, CONT RACK, GOV						
	183539-0440		9503-		1	D Z	ID=5
	183579-4920		9503-		1	O I T	
34	SPRING; SPD CONT LEVER, GOV						
	115723-2190		9503-		1	CDE F H KLMNO QR T U XY Z D EF HI M PQ S TU	
	115723-2190		9503-		1	G G JKL N O R V	
37	LEVER ASM; TENSION, GOV						
	515725-0170		9503-		1	CDE F LM Q T XY Z D	
	515725-0500		9503-		1	G JKL N O R V	
	515725-0500		9503-		1	H K NO R U C EF HI M PQ S TU	
	515725-0170		9503-		1	G	
40	SCREW; LEVER ADJ, GOV						
	115729-1720		9503-		1	CD F K M Q T Z D H	

0-81 GOVERNOR; INJECTION PUMP

FIG-NO.

KEY. NO	PART NAME / PART NUMBER	ITC	APPLIED DATE	LR	QTY	1	2	3	4	5	6	7	8	9	10	11	12	13	14	15	16	17	18	19	20	Remarks
						8	8	8	8	8	8	8	8	8	8	8	8	8	8	8	8	8	8	8	8	
						9	9	9	9	9	9	9	9	9	9	9	9	9	9	9	9	9	9	9	9	
						4	4	4	4	4	4	4	4	4	4	7	7	7	7	7	7	7	7	7	7	
						3	3	3	3	3	4	4	4	4	4	0	0	0	0	0	0	0	0	1	1	
						3	4	4	6	6	7	8	8	0	2	4	4	6	6	7	1	1	1	2	2	
						5	1	2	0	0	3	1	8	8	4	8	1	6	9	2	5	6	1	1	4	
						7	3	9	3	7	2	1	1	9	0	8	9	7	2	7	9	1	4	6	4	
						0	0	3	0	0	0	4	9	6	3	0	4	7	2	5	2	8	7	2	2	
						7	8	4	6	6	9	8	7	0	2	4	3	5	1	5	9	4	9	4	0	
						1	0	3	2	1	2	1	0	0	2	2	1	1	4	0	1	0	0	1	0	
						A	B	C	D	E	F	G	H	I	J	K	L	M	N	O	P	Q	R	S	T	U	V	W	X	Y	Z	A	B	C	D	E	F	G	H	I	J	K	L	M	N	O	P	Q	R	S	T	U	V	W	X
40	SCREW; LEVER ADJ, GOV																																																				
	115729-1010		9503-		1					E			H			L		N	O			R			U			X				C		E	F			I						P	Q		S	T	U		
	115729-1010		9503-		1							G																								G					K			N	O			R			V	
	115729-1720		9503-		1																																			J		L										
	115729-1010		9604-		1																																						M										
	115729-1720		9604-		1																																							N									
41	SPRING CAPSULE; IDLE CONT, GOV																																																				
	115729-2790		9503-		1				C	D	E	F				K	L	M	N	O		Q			T	U		X		Z				E			H	I					M			P	Q		S	T	U	
	115729-2790		9503-		1							G																								G				J	K	L		N				R			V	
	515723-1130		9503-		1								H										R																														
	894470-7560		9503-		1																											C	D		F																		
	894470-7560		9503-		1																																								O								
42	NUT; SPRING CAPSULE, IDLE CONT, GOV																																																				
	115779-0400		9503-		1				C		E	F					L	M	N	O		Q				U			X	Y			C	D	E	F			H	I				M			P	Q		S	T	U	
	981325-0810		9503-		1					D						K								T						Z																						
43	NUT; IDLING CONT SPRING, GOV																																																				
	900813-0230		9503-		1				C		E		H			L		N	O			R			U			X	Y			C		E	F			I					M			P	Q		S	T	U	
	900813-0230		9503-		1					D		F				K		M				Q		T						Z			D				H															
	988410-0370		9503-		1					D		F				K		M				Q		T						Z			D				H															
	900813-0230		9503-		1							G																								G					K			N	O			R			V	
	900813-0230		9503-		1																																			J		L										
	988410-0370		9503-		1																																			J		L										
44	SPRING CAPSULE; IDLE CONT, GOV																																																				
	115729-2810		9503-		1					D								M				Q								Z																						
	115723-2460		9503-		1							F												T																												
	515723-1140		9503-		1											K																																				
	115723-2690		9503-		1																												D																			
	115723-2640		9503-		1																																H															
	115723-2200		9503-		1																																			J		L										
45	LEVER ASM; GOV, INJ PUMP																																																				
	894380-6580		9503-		1	A	B																				W																									
	897041-6600		9503-		1				C		E	F					L					Q											D																			
	981321-7490		9503-		1					D								M						T				X	Y	Z																						
	897046-4250		9503-		1							G																													J	K	L		N	O			R			V	
	115725-2090		9503-		1								H			K							R		U																											
	897032-9680		9503-		1									I																																							
	894418-0330		9503-		1										J																																						
	897046-4250		9503-		1														N	O												C		E	F			H	I				M			P	Q		S	T	U	
	894174-8450		9503-		1																P																																
	897014-3160		9503-		1																		S			V																										
	897047-2030		9503-		1																									A																						
	897047-2050		9503-		1																										B																					
	897041-6600		9503-		1																															G																
46	SPRING; GOV, INJ PUMP																																																				
(A)	894473-1280		9503-		2	A	B						I										S			V	W			A	B																					

GOVERNOR; INJECTION PUMP

0-81
FIG-NO.

ABCDE	FGHIJ	KLMNO	PQRST	UVWXY	ZABCD	EFGHI	JKLMN	OPQRS	TUVWX
88888	88888	88888	88888	88888	88888	88888	88888	88888	888
99999	99999	99999	99999	99999	99999	99999	99999	99999	999
44444	44444	44444	44777	77777	77777	77777	77777	77777	777
33333	33334	44444	44000	00000	00000	00000	00011	11111	111
34466	78880	24446	67111	11222	23344	44466	88800	03333	677
51200	31884	81692	56114	57007	92923	89918	18904	84479	836
73937	21190	89727	91464	57370	92605	70155	55425	98882	082
00300	04963	04725	28722	77956	43582	92975	79260	27732	780
78466	98702	43515	94940	96070	91725	46251	39759	23424	421
10321	21002	21114	01001	00201	01101	00010	20112	01101	000

KEY NO	PART NAME / PART NUMBER	ITC	APPLIED DATE	LR	QTY	ABCDE	FGHIJ	KLMNO	PQRST	UVWXY	ZABCD	EFGHI	JKLMN	OPQRS	TUVWX	Remarks
46	SPRING; GOV, INJ PUMP															
(B)	894380-6590		9503-		1	A B				W						
	900812-1300		9503-		1	C				X						
	115723-1460		9503-		1	D					Z D					
	515723-0680		9503-		1	E	F	L M	Q T	Y						
	515723-0120		9503-		1		G						J K L	O R		
	515723-0120		9503-		1		H	K N O	R	U	C	E F H I				
(B)	894317-5120		9503-		1		I									
(A)	894227-6030		9503-		2		J		P							
(B)	894418-0340		9503-		1		J									
(B)	894174-8420		9503-		1				P							
(B)	894321-1680		9503-		1				S		A					
(B)	894336-9380		9503-		1					V						
(B)	894408-5370		9503-		1						B					
	900812-1300		9503-		1							G				
	515723-0120		9604-		1								L N			
	515723-0120		9503-9603		1								M			
	115723-1460		9604-		1								M			
	897039-5370		9503-9603		1								N			
	897039-5370		9701-		1									P		
	897039-5370		9503-		1										T U	
	897039-5370		9503-		1										V	
47	PIN; RET															
	894342-3060		9503-		1	A B	I		S	V W						
	894174-8460		9503-		1		J		P							
	897047-2040		9503-		1						A					
	897047-2060		9503-		1						B					
48	SHAFT; GOV, INJ PUMP															
	894248-0020		9503-		1	A B	I J		P S	V W	A B					
49	GASKET; GOV SHAFT, INJ PUMP															
	894227-6060		9503-		1	A B	I J		P S	V W	A B					
50	NUT; GOV SHAFT, INJ PUMP															
	894473-1290		9503-		1	A B	I		S	V W	A B					
	894247-7190		9503-		1		J		P							
51	SHAFT; LOAD CONT LEVER, GOV															
	894174-8070		9503-		1	A	I				A					
	894174-8410		9503-		1	B	J		P							
	894174-8280		9503-		1				S	V	B					
	894174-8070		9503-9511		1					W						
	894174-8410		9512-		1					W						
52	WASHER; CONT SHAFT, GOV															
	894227-5900		9503-		1	A B	I J		P	V W						
	894227-5900		9503-		2				S		A B					
53	GASKET; CONT SHAFT, GOV															
	894227-5850		9503-		1	A B	I J		P S	V W	A B					

0-81 GOVERNOR; INJECTION PUMP

FIG-NO.

KEY. NO — PART NAME

```
8888888888888888888888888888888888888888888888888
999999999999999999999999999999999999999999999999
444444444444444447777777777777777777777777777777
333333333444444440000000000000000000000011111111
344667888024446671111122223344444668880003333677
512003188481092561145700792923899181890484479836
739372119089727914645737092605701555542598882082
003000496304725287227795643582929757926027732780
784669870243515949409607091725462513975923424421
103212100221114010010020101101000102011201101000
ABCDEFGHIJKLMNOPQRSTUVWXYZABCDEFGHIJKLMNOPQRSTUVWX
```

KEY NO	PART NAME / PART NUMBER	ITC	APPLIED DATE	LR	QTY	Applicable models	Remarks
54	VALVE: MAG, ENG STOP, INJ PUMP						
	894242-2750		9503-		1	A B I J P S V W A B	
55	GASKET: MAG VLV, INJ PUMP						
	894239-3730		9503-		1	A B I J P S V W A B	
56	WIRE: LEAD, MAG VLV, INJ PUMP						
	894470-5820		9503-		1	A B I S V W A B	
	582690-0810		9503-		1	J	
	894243-7190		9503-		1	P	
57	NUT: VLV						
	894473-1350		9503-		1	A B I S V W A B	
	115729-0500		9503-		1	J P	
58	WASHER: MAG VLV, INJ PUMP						
	981325-5540		9503-		1	P	
	981325-5540		9512-		1	W	
59	COVER: GOV COVER						
	894167-7930		9503-		1	C D F K Q T Z C D H	
	115721-0230		9503-		1	E H L N O R U X Y C E F I P Q S T U	
	115721-0230		9604-		1	E M	
	115721-0230		9503-		1	G G K N O R V	
	894167-7930		9604-		1	J L N	
	894167-7930		9503-9603		1	M	
60	BOLT: COVER FIX, GOV COVER						
	515729-1670		9503-		1	C D E F H K L M N O Q R T U X Y Z C D E F H I M P T U	
	515729-1670		9503-		1	C D E F H K L M N O Q R T X Z C D E F I	
	901900-6160		9503-		1	C D E F K L M N O Q T U X Y Z C D E F H I M P T U	M6X16 W/LK WASHER
	115619-2820		9503-		1	C D E F K L M N O Q T Z C D E F I	
	515729-1670		9503-		1	G G J K L N O R V	
	515729-1670		9503-		1	G G J K L N O R V	
	901900-6160		9503-		1	G G J K L N O R V	M6X16 W/LK WASHER
	115619-2820		9503-		1	G G J K L N R V	
	901900-6160		9503-		1	H R X	M6X16 W/LK WASHER
	115619-2820		9503-		1	H R X	
	115619-2820		9503-		1	U Y H M P T U	
	515729-1670		9503-		1	U Y H P T U	
	515729-1670		9604-		1	M	
	515729-1670		9503-9603		1	M	
63	GASKET: COVER TO GOV COVER						
	981391-9070		9503-		1	C D E F H K L M N O Q R T U X Y Z C D E F H I M P Q S T U	
	981391-9070		9503-		1	G G J K L N O R V	
64	LEVER: LOAD CONT, GOV						
(C)	894174-8081		9503-		1	A B J P W	
(C)	894174-8091		9503-		1	A B J P W	

GOVERNOR; INJECTION PUMP

0-81
FIG-NO.

KEY. NO — PART NAME

Model codes (read vertically, printed above the applicability letters):

```
8888888888888888888888888888888888888888888888888
999999999999999999999999999999999999999999999999
444444444444444447777777777777777777777777777777
333333333444444440000000000000000000000111111111
344667888024446671111122223344444668880003333677
512003188481692561145700792923899181890484479836
739372119089727914645737092605701555542598882082
003000496304725287227795643582929757926027732780
784669870243515949409607091725462513975923424421
103212100221114010010020101101000102011201101000
ABCDEFGHIJKLMNOPQRSTUVWXYZABCDEFGHIJKLMNOPQRSTUVWX
```

KEY NO	PART NUMBER	I/C	APPLIED DATE	L/R	QTY	Applicable models	Remarks
64	**LEVER; LOAD CONT. GOV**						
(A)	894167-7970		9503-		1	C E H K L N Q R T U M U	
(A)	894321-2140		9503-		1	D Z	
(B)	897032-1640		9503-		1	F D	
(C)	894317-5010		9503-		1	I S V A B	
(C)	894317-5020		9503-		1	I S V A B	
(A)	897016-0050		9503-		1	X T	
(A)	894462-9660		9503-		1	C	
(A)	897016-0050		9503-		1	J L	
(B)	897032-1640		9503-		1	K	
(A)	897016-0050		9503-9612		1	P	
(A)	897182-6460		9503-		1	U	
66	**SHAFT; LEVER**						
	894317-5030		9503-		1	I S V B	
	897047-2020		9503-		1	A	
69	**GASKET; LEVER SHAFT**						
	894433-2160		9503-		1	I S V A B	
70	**SPACER; SHAFT**						
	894433-2170		9503-		1	I S V A B	
71	**SPRING; CONT LEVER, GOV**						
(A)	894132-7850		9503-		1	A B J P W	
	894321-2150		9503-		1	D Z	
(A)	894317-5070		9503-		1	I S V A B	
(B)	894317-5040		9503-		1	I S V A B	
	115723-0280		9503-		1	O I T	
73	**ANGLE; LEVER SPRING, GOV**						
	894122-7130		9503-		1	I S V A B	
78	**LEVER; STOPPER, GOV**						
	894331-5340		9503-		1	G G N R V	
	894331-5340		9503-		1	M O Y F H I	
	115725-4490		9503-		1	E	
	897113-1100		9503-		1	O	
	897113-1100		9503-		1	O	
	894331-5340		9701-		1	P	
79	**SHIM; LEVER SETTING, GOV**						
	115729-2940		9503-		AR	C D E F H K L M N O Q R T U X Y Z D E F H I M P Q S T U	T=0. 20
	115729-2950		9503-		AR	C D E F H K L M N O Q R T U X Y Z D E F H I M P Q S T U	T=0. 25
	115729-2960		9503-		AR	C D E F H K L M N O Q R T U X Y Z D E F H I M P Q S T U	T=0. 30
	115729-2970		9503-		AR	C D E F H K L M N O Q R T U X Y Z D E F H I M P Q S T U	T=0. 35
	115729-2980		9503-		AR	C D E F H K L M N O Q R T U X Y Z D E F H I M P Q S T U	T=0. 40
	115729-2990		9503-		AR	C D E F H K L M N O Q R T U X Y Z D E F H I M P Q S T U	T=0. 50
	115729-2940		9503-		AR	G G J K L N O R V	T=0. 20
	115729-2950		9503-		AR	G G J K L N O R V	T=0. 25

0-81 GOVERNOR; INJECTION PUMP

FIG-NO.

KEY NO	PART NUMBER	ITC	APPLIED DATE	LR	QTY	1	2	3	4	5	6	7	8	9	10	11	12	13	14	15	16	17	18	19	20	21	22	23	24	Remarks
						8	8	8	8	8	8	8	8	8	8	8	8	8	8	8	8	8	8	8	8	8	8	8	8	
						9	9	9	9	9	9	9	9	9	9	9	9	9	9	9	9	9	9	9	9	9	9	9	9	
						4	4	4	4	4	4	4	4	4	4	4	7	7	7	7	7	7	7	7	7	7	7	7	7	
						3	3	3	3	3	3	3	4	4	4	4	0	0	0	0	0	0	0	0	0	1	1	1	1	
	PART NUMBER	ITC	APPLIED DATE	LR	QTY	3	4	6	6	7	8	8	0	2	4	4	6	7	1	1	1	2	2	3	3	4	4	4	6	Remarks
						5	1	2	0	0	3	1	8	8	4	8	1	6	9	2	5	6	1	1	4	5	7	0	0	
						7	3	9	3	7	2	1	1	9	0	8	9	7	2	7	9	1	4	6	4	5	7	3	7	
						0	0	3	0	0	0	4	9	6	3	0	4	7	2	5	2	8	7	2	2	7	7	9	5	
						7	8	4	6	6	9	8	7	0	2	4	3	5	1	5	9	4	9	4	0	9	6	0	7	
						1	0	3	2	1	2	1	0	0	2	1	1	1	4	0	1	0	0	1	0	0	2	0	1	
						A	B	C	D	E	F	G	H	I	J	K	L	M	N	O	P	Q	R	S	T	U	V	W	X	
79	SHIM; LEVER SETTING, GOV																													
	115729-2960		9503-		AR					G												G		J	K	L		N	O		R		V			T=0.30
	115729-2970		9503-		AR					G												G		J	K	L		N	O		R		V			T=0.35
	115729-2980		9503-		AR					G												G		J	K	L		N	O		R		V			T=0.40
	115729-2990		9503-		AR					G												G		J	K	L		N	O		R		V			T=0.50
	988410-4210		9503-		AR															C																T=0.20
	981325-5560		9503-		AR															C																T=0.50
80	WASHER; LK, CONT LEVER, GOV																													
(A)	909150-5060		9503-		1	A	B					I	J				P		S		V	W														ID=6
(B)	909150-5060		9503-		2								J				P																			ID=6
(A)	909150-5060		9503-		2																		A	B												ID=6
82	NUT; CONT LEVER FIX, GOV																													
	115729-0060		9503-		1	A	B					I	J				P		S		V															
	909110-4060		9503-9511		1																	W														M6
	115729-0060		9512-		1																	W														
	909110-4060		9503-		1																		A	B												M6
83	SEAL; OIL, CONT SHAFT, GOV																													
	981391-9060		9503-		1					G												G		J	K	L		N	O		R		V			
86	BUSHING; CONT SHAFT, GOV COVER																													
	981325-4290		9503-		1			C	D	E	F		H		K	L	M	N	O		Q	R		T	U		X	Y	Z	
	981325-4290		9503-		1					G												G		J	K	L		N	O		R		V			
87	BOLT; RETURN SPRING, GOV																													
	901900-6160		9503-		1			C	D	E			H		K	L	M	N	O		Q	R		T	U		X	Y	Z	
	115729-3960		9503-		1						F																			
	901900-6160		9503-		1					G												G		J		L		N	O		R		V			
	115729-3960		9503-		1																				K											
88	BOLT; LEVER																													
	515729-0580		9503-		2																									
	515729-0580		9503-		1																				K					
90	SCREW; FULL LOAD ADJ, GOV																													
(A)	894426-0490		9503-		1	A	B					I							S		V	W		A	B					
(B)	894426-0490		9503-		1	A	B					I							S		V	W		A	B					
(C)	894316-2740		9503-		1	A	B															W			B					
(C)	894316-2750		9503-		1	A	B															W			B					
(C)	894316-2760		9503-		1	A	B															W			B					
(D)	981325-1770		9503-		1			C	D	E	F		H		K	L	M	N	O		Q	R		T	U		X	Y	Z	
(D)	981325-1770		9503-		1					G												G		J	K	L		N	O		R		V			
(C)	894343-3100		9503-		1								I						S		V			A						
(A)	515729-2680		9503-		1								J				P													
(B)	894227-5870		9503-		1								J				P													
(C)	894227-5940		9503-		1								J				P													L=53
(C)	894227-5950		9503-		1								J				P													L=55
(C)	894227-5960		9503-		1								J				P													L=57

GOVERNOR; INJECTION PUMP

FIG-NO. 0-81

Model code columns (header rows, read top to bottom per column):

```
8888888888888888888888888888888888888888888888888888 8
88888 88888 88888 88888 88888 88888 88888 88888 88888 88888 888
99999 99999 99999 99999 99999 99999 99999 99999 99999 99999 999
44444 44444 44444 44777 77777 77777 77777 77777 77777 77777 777
33333 33334 44444 44000 00000 00000 00000 00011 11111 111
34466 78880 24446 67111 11222 23344 44466 88800 03333 677
51200 31884 81692 56114 57007 92923 89918 18904 84479 836
73937 21190 89727 91464 57370 92605 70155 55425 98882 082
00300 04963 04725 28722 77956 43582 92975 79260 27732 780
78466 98702 43515 94940 96070 91725 46251 39759 23424 421
10321 21002 21114 01001 00201 01101 00010 20112 01101 000
ABCDE FGHIJ KLMNO PQRST UVWXY ZABCD EFGHI JKLMN OPQRS TUVWX
```

KEY NO	PART NAME / PART NUMBER	I T C	APPLIED DATE	L R	QTY	ABCDEFGHIJKLMNOPQRSTUVWXYZABCDEFGHIJKLMNOPQRSTUVWX	Remarks
90	SCREW; FULL LOAD ADJ, GOV						
(D)	515729-1230		9503-		1	H U	L=62
(D)	515729-1230		9604-		1	N	L=62
(D)	981325-1770		9503-9612		1	P	
(D)	515729-1230		9701-		1	P	L=62
91	SPRING CAPSULE; ADJ, GOV						
	115723-0730		9503-		1	C E F H K L N R T X D	
	894167-7940		9503-		1	D M Q Z C E F	
	894167-7940		9503-		1	G K O R	
	115723-2840		9503-		1	O U I	
	115723-0730		9503-		1	G	
	894427-8480		9503-		1	H M P Q S T U	
	894427-8480		9503-		1	J L N V	
93	NUT; ADJ SCREW LK, INJ PUMP GOV						
(A)	894426-0470		9503-		1	A B I S V W A B	
(B)	894426-0470		9503-		1	A B I S V W A B	
(C)	894316-2770		9503-		1	A B I S V W A B	
(F)	515729-2090		9503-		1	C D E F H K L M N O Q R T U X Y Z C D E F H I M P Q S T U	
(E)	984410-0270		9503-		2	C D E F H K L N O Q R T U X Y Z D E F H I M P Q S T U	
(F)	515729-2090		9503-		1	G G J K L N O R V	
(E)	894410-0270		9503-		2	G G J K L N R V	
(D)	115729-0060		9503-		1	I S V	
(A)	115729-0060		9503-		1	J P	
(B)	981325-0810		9503-		1	J P	
(C)	894227-5970		9503-		1	J P	
(E)	981325-2370		9503-		2	M C	
(D)	909110-4600		9503-		1	A B	
94	SCREW; ADJ, CONT LEVER, GOV						
	515729-1230		9503-		1	C D E F H K L M N O Q R T U X Y Z C D E F H I M P Q S T U	L=62
	515729-1220		9503-		1	G K O R	
	515729-1220		9503-		1	C E F	
	515729-1230		9503-		1	G J L N V	L=62
96	PLUG; LEVER SHAFT, GOV						
	515729-0530		9503-		2	C D E F H K L M N O Q R T X Y Z C D E F H I M P Q S T U	
	515729-0530		9503-		2	G G J K L N O R V	
97	BOLT; PIVOT, GOV LEVER						
	894227-6010		9503-		2	A B I J P S V W A B	
98	GASKET; PIVOT BOLT, GOV LEVER						
	894227-6020		9503-		2	A B I J P S V W A B	
99	PIN; TENSION LEVER, GOV						
	981325-0620		9503-		1	C D E F H K L M N O Q R T U X Y Z C D E F H I M P Q S T U	
	981325-0620		9503-		1	G G J K L N O R V	
101	GASKET; ADJ SPRING CAPSULE, GOV						
	894227-5980		9503-		1	A B I J P S V W A B	

0-81 GOVERNOR; INJECTION PUMP

FIG-NO.

KEY. NO — PART NAME

Model code header rows (as printed):

8888888888888888888888888888888888888888888888888888
9999999999999999999999999999999999999999999999999999
4444444444444444444477777777777777777777777777777777
3333333334444444440000000000000000000000011111111111
3446678880244466711111222233444446688800033336 77
5120031884816925611457007929238991818904844798 36
7393721190897279146457370926057015555425988820 82
0030004963047252872277956435829297579260277327 80
7846698702435159494096070917254625139759234244 21
1032121002211140100100201011010001020112011010 00

ABCDEFGHIJKLMNOPQRSTUVWXYZABCDEFGHIJKLMNOPQRSTUVWX

KEY NO	PART NUMBER	ITC	APPLIED DATE	LR	QTY	Applicability	Remarks
101	GASKET; ADJ SPRING CAPSULE, GOV						
	894144-5880		9503-		2	CDEF H KLMNO QR TU XYZ CDEF HI M PQ STU	
	894144-5880		9503-		2	G G JKL NO R V	
102	WASHER; FULL LOAD ADJ SCREW, GOV						
	894227-5930		9503-		1	AB IJ P S VW AB	
103	NUT; CAP, ADJ SPRING CAPSULE, GOV						
	115729-0920		9503-		1	CDEF H KLMNO QR TU XYZ CDEF HI M PQ STU	
	115729-0920		9503-		1	G G JKL NO R V	
104	CAP; LOCK NUT, ADJ SCREW						
(A)	894316-2620		9503-		1	AB I S VW AB	L=16.5
(B)	894316-2630		9503-		1	AB I S VW AB	L=18.0
(B)	894316-2640		9503-		1	AB I S VW AB	L=21.0
(B)	894316-2650		9503-		1	AB I S VW AB	L=24.0
(B)	894316-2660		9503-		1	AB I S VW AB	L=27.0
105	LEVER; SPD CONT, GOV						
(E)	894479-4380		9503-		1	C M U	
(A)	894321-2130		9503-		1	D Z	
(B)	894441-8410		9503-		1	E H KLMN R TU XY EF H Q S	
(B)	897032-9710		9503-		1	F	
(B)	894441-8410		9503-		1	G G J L N R V	
(D)	897016-0041		9503-		1	O I T	
(A)	894167-7960		9503-		1	Q C	
(C)	897032-1630		9503-		1	D	
(G)	115725-1700		9503-		1	D	
(C)	897032-1630		9503-		1	K	
(G)	115725-1700		9503-		1	K	
(F)	894167-7960		9503-		1	O	
(B)	894441-8410		9503-9612		1	P	
106	KEY; SWIVEL LEVER, GOV						
	981325-0300		9503-		1	CDEF H KLMNO QR TU XYZ CDEF HI M PQ STU	13MM
	981325-0300		9503-		1	G G JKL NO R V	13MM
107	WASHER; SWIVEL LEVER, GOV						
	981325-4880		9503-		AR	CDEF H KLMNO QR TU XYZ CDEF HI M PQ STU	
	981325-4880		9503-		AR	G G JKL NO R V	
108	COLLAR; SWIVEL LEVER, GOV						
	115729-3010		9503-		1	CDEF H KLMNO QR TU XYZ CDEF HI M PQ STU	
	115729-3010		9503-		1	G G JKL NO R V	
109	SHIM; SWIVEL LEVER, GOV						
	115729-0990		9503-		1	CDEF H KLMNO QR TU XYZ CDEF HI M PQ STU	
	981325-0970		9503-		AR	CDEF H KLMNO QR TU XYZ CDEF HI Q S	
	115729-0990		9503-		1	G G JKL NO R V	
	981325-0970		9503-		AR	G G JKL O R	

GOVERNOR; INJECTION PUMP

0-81
FIG-NO.

Model code header (read vertically per column):

```
88888 88888 88888 88888 88888 88888 88888 88888 88888 888
99999 99999 99999 99999 99999 99999 99999 99999 99999 999
44444 44444 44444 44777 77777 77777 77777 77777 77777 777
33333 33334 44444 44000 00000 00000 00000 00011 11111 111
34466 78880 24446 67111 11222 23344 44466 88800 03333 677
51200 31884 81692 56114 57007 92923 89918 18904 84479 836
73937 21190 89727 91464 57370 92605 70155 55425 98882 082
00300 04963 04725 28722 77956 43582 92975 79260 27732 780
78466 98702 43515 94940 96070 91725 46251 39759 23424 421
10321 21002 21114 01001 00201 01101 00010 20112 01101 000
ABCDE FGHIJ KLMNO PQRST UVWXY ZABCD EFGHI JKLMN OPQRS TUVWX
```

KEY NO	PART NAME / PART NUMBER	ITC	APPLIED DATE	LR	QTY	Applicability	Remarks
109	SHIM; SWIVEL LEVER, GOV						
	981325-0970		9503-9603		AR	M	
	981325-1730		9604-		AR	M	
	981325-1730		9503-9603		AR	N	
	981325-0970		9604-		AR	N	
	981325-0970		9503-9612		AR	P	
	981325-1730		9701-		AR	P	
	981325-1730		9503-		AR	U	
	981325-1730		9503-		AR	V	
110	SEAL; OIL, SWIVEL LEVER, GOV						
	115729-0980		9503-		1	CDE F H KLMNO QR T U XY Z CD EF HI M PQ S TU	
	115729-0980		9503-		1	G G JKL N O R V	
111	BUSHING; SWIVEL LEVER, GOV						
	897024-2390		9503-		1	C E F L NO Q CD EF HI M PQ S TU	
	897024-2400		9503-		1	C E F L NO Q CD EF HI M TU	
	115729-2930		9503-		2	D H K M R T U XY Z	
	897024-2390		9503-		1	G G JKL N O R V	
	897024-2400		9503-		1	G G JKL O R	
	897024-2400		9604-		1	N	
	897024-2400		9701-		1	P	
112	GASKET; SWIVEL LEVER, GOV						
	981321-2050		9503-		2	CDE F H KLMNO QR T U XY Z CD EF HI M PQ S TU	
	981321-2050		9503-		2	G G JKL N O R V	
113	RING; SNAP, SWIVEL LEVER, GOV						
	909185-4150		9503-		2	CDE F H KLMNO QR T U XY Z CD EF HI M PQ S TU	ID=15 OD=36
	909185-4150		9503-		2	G G JKL N O R V	ID=15 OD=36
114	PLUG; SWIVEL LEVER, GOV COVER						
	981325-3180		9503-		1	D H K M R T U XY Z D	
125	CAP; STOP LEVER SPRING, GOV						
	981325-2100		9503-		1	CDE F H KLMNO QR T U XY Z D EF HI M PQ S TU	
	981325-2100		9503-		1	G G JKL N O R V	
132	BRACKET; ADJ SCREW, GOV						
	894174-8100		9503-		1	AB J P W	
133	BOLT; BRKT FIX, GOV						
	894242-2770		9503-		2	AB J P	
	894313-2640		9503-		2	W	
134	BRACKET; CONT CABLE, GOV						
	894317-5090		9503-		1	I S V AB	
135	BRACKET; POTENTIO METER						
	894317-5080		9503-		1	I S V AB	

0-81 GOVERNOR; INJECTION PUMP

FIG-NO.

KEY NO	PART NAME / PART NUMBER	ITC	APPLIED DATE	LR	QTY	8888888888888888888888888888888888888888888888 / 9999999999999999999999999999999999999999999999 / 4444444444444444477777777777777777777777777777 / 3333333333444444440000000000000000000011111111 / 3446678880244466711111222233444466880003333677 / 5120031884816925611457007929238991818904844798 36 / 7393721190897279146457370926057015555425988820 82 / 0030004963047252872277956435829297579260277327 80 / 7846698702435159494096070917254625139759234244 21 / 1032121002211140100100201011010001020112011010 00	Remarks
						ABCDEFGHIJKLMNOPQRSTUVWXYZABCDEFGHIJKLMNOPQRSTUVWX	
140	BOLT; BRKT, INJ PUMP						
	894313-2670		9503-		1	I S V	M6X12
	894313-2670		9503-		2	AB	M6X12
141	PLATE ASM; PIPE BRKT						
	894174-8220		9503-		1	AB J P W	
145	CAP; GOV COVER, INJ PUMP						
	894167-7920		9503-		1	CDEF H KLMNO QR TU XYZ CDEF HI M PQ STU	
149	WIRE; VLV						
	894174-8230		9503-		1	P	
150	ADAPTER; GOV HSG, INJ PUMP						
	981315-0650		9503-		1	CDEF H KLMNO QR TU XYZ CDEF HI M PQ STU	
	981315-0650		9503-		1	G G JKL NO R V	
154	BOLT; GOV HSG						
(A)	894321-2120		9503-		1	D K Z	
(B)	115729-2260		9503-		1	O I T	
157	BOLT; START SPRING PLATE, GOV						
	901900-8180		9503-		1	CDEF H KLMNO QR TU XYZ CDEF HI M PQ STU	M8X18 W/LK WASHER
	901900-8180		9503-		1	G G JKL NO R V	M8X18 W/LK WASHER
160	GASKET; PLUG TO HSG						
	115729-0150		9503-		1	CDEF H KLMNO QR TU XYZ CDEF HI M PQ STU	
161	PLUG; HSG						
	115729-0380		9503-		1	CDEF H KLMNO QR TU XYZ CDEF HI M PQ STU	
	115729-0380		9503-		1	G G JKL NO R V	
162	WASHER; PLUG TO HSG						
	115729-0150		9503-		1	G G JKL NO R V	
185	GASKET; BUSHING, GOV COVER						
	981391-6060		9503-		1	CDEF H KLMNO QR TU XYZ CDEF HI M PQ STU	
196	BRACKET; COVER						
	894167-7980		9503-		1	CDEF H KLMNO QR TU XYZ CDEF HI M PQ STU	
	894167-7980		9503-		1	G G JKL NO R V	
236	CAP; SPRING CAPSULE, IDLE CONT, GOV						
	115729-0930		9503-		1	CDEF H KLMNO QR TU XYZ CDEF HI M PQ STU	CAP NUT
	115729-0930		9503-		1	G G JKL NO R V	CAP NUT
238	GASKET; SPRING CAPSULE CAP, GOV						
	515729-0990		9503-		2	CDEF H KLMNO QR TU XYZ CDEF HI M PQ STU	
	515729-0990		9503-		2	G G JKL NO R V	
253	LIMITTER; GOV CONT						
	894167-7920		9503-		1	G JKL NO V	

GOVERNOR; INJECTION PUMP

0-81
FIG-NO.

KEY. NO | PART NAME

Applicability codes (columns read vertically):

```
88888 88888 88888 88888 88888 88888 88888 88888 88888 888
99999 99999 99999 99999 99999 99999 99999 99999 99999 999
44444 44444 44444 44777 77777 77777 77777 77777 77777 777
33333 33334 44444 44000 00000 00000 00000 00011 11111 111
34466 78880 24446 67111 11222 23344 44466 88900 03333 677
51200 31884 81692 56114 57007 92923 89919 18904 84479 836
73937 21190 89727 91464 57370 92605 70155 55425 98882 082
00300 04963 04725 28722 77956 43582 92975 79260 27732 780
78466 98702 43515 94940 96070 91725 46251 39759 23424 421
10321 21002 21114 01001 00201 01101 00010 20112 01101 000
ABCDE FGHIJ KLMNO PQRST UVWXY ZABCD EFGHI JKLMN OPQRS TUVWX
```

KEY NO	PART NAME / PART NUMBER	ITC	APPLIED DATE	LR	QTY	Applicability	Remarks
266	NUT: PIN TO LINK. CONT RACK. GOV						
	115729-0500		9503-		1	P	
293	LEVER: CONT						
	894317-5050		9503-		1	I S V AB	
	894317-5060		9503-		1	I S V AB	
352	NUT: CAP						
	115779-0400		9503-		1	G G JKL NO R V	
401	BRACKET: HOUSING						
	894321-2110		9503-		1	D Z	
415	BOLT: BRKT TO HOUSING						
	894171-1630		9503-		1	D Z	

0-84	FEED PUMP; INJECTION PUMP
FIG-NO.	(NO.1)

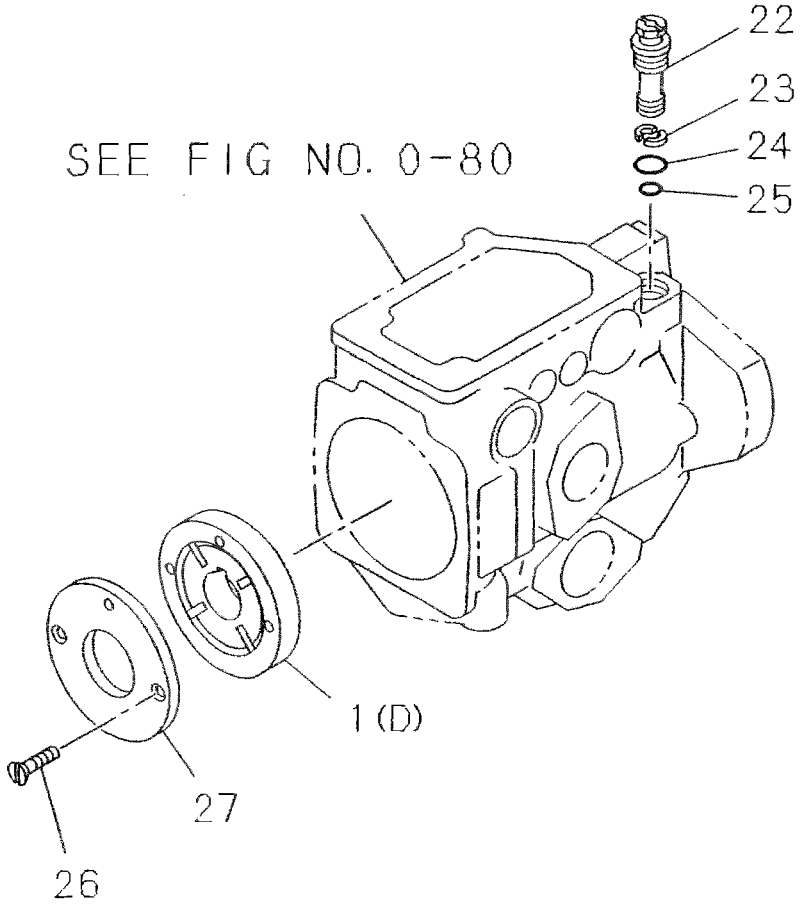

084A0150796

FEED PUMP; INJECTION PUMP

(NO.2)

0-84

FIG-NO.

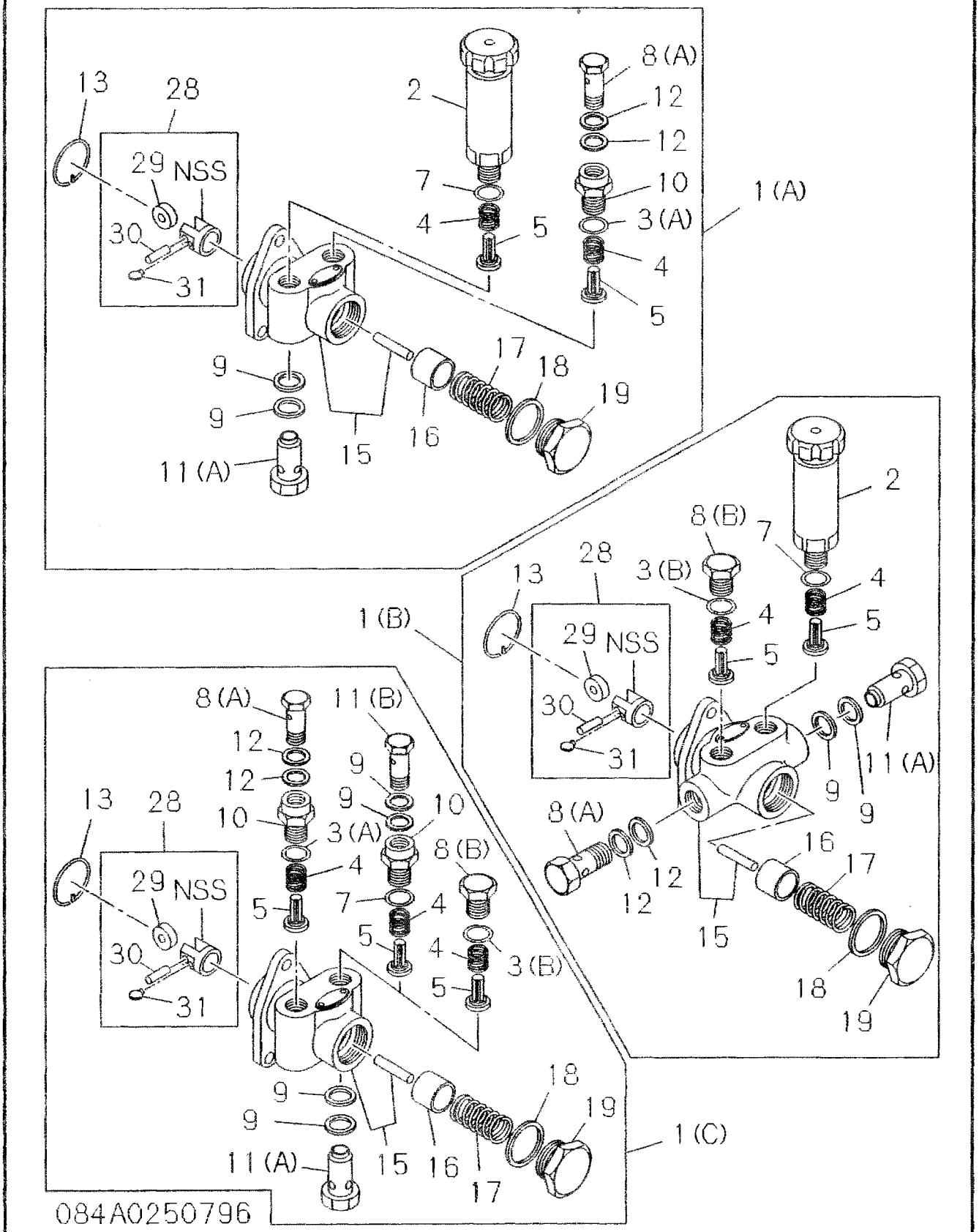

0-84 FEED PUMP; INJECTION PUMP

FIG-NO.

KEY. NO — PART NAME

Code	Model
A	8943357071
B	8943413080
C	8943429343
D	8943603062
E	8943607061
F	8943732092
G	8943811481
H	8943881970
I	8943889600
J	8944043022
K	8944288042
L	8944419431
M	8944467751
N	8944492211
O	8944627554
P	8944659290
Q	8944761841
R	8970114790
S	8970116240
T	8970144201
U	8970155790
V	8970177760
W	8970203902
X	8970207570
Y	8970270601
Z	8970299490
A	8970322311
B	8970396571
C	8970420820
D	8970435251
E	8970487940
F	8970490260
G	8970491920
H	8970615751
I	8970685510
J	8970815732
K	8970885990
L	8970894271
M	8971002651
N	8971045092
O	8971089220
P	8971348731
Q	8971348741
R	8971378320
S	8971392241
T	8971680740
U	8971738820
V	8971762010
W	
X	

KEY NO	PART NUMBER	ITC	APPLIED DATE	LR	QTY	Applicable models	Remarks
1	PUMP ASM: FUEL FEED, INJ PUMP						
(D)	894478-8480		9503-		1	AB I S V AB	
(A)	897016-2680		9503-		1	C XY D G I M P	
(A)	897016-2680		9503-9511		1	C S	
(A)	894178-8430		9503-		1	DE GH KLMNO QR TU Z C EF H K NO R UV	
(B)	897021-9170		9503-		1	F	
(D)	894227-4770		9503-		1	J F	
(D)	894478-8480		9503-9511		1	W	
(D)	894227-4770		9512-		1	W	
(C)	897081-8040		9503-		1	J L	
(C)	897081-8041		9503-		1	Q T	
(C)	897081-8041		9512-		1	S	
2	PUMP: PRIMING, FUEL FEED PUMP						
	894131-1300		9503-		1	CDEFGH KLMNO QR TU XYZ CDEFGHI K MNOP R UV	
	894131-1300		9503-9511		1	S	
3	GASKET: PRIMING PUMP, FUEL FEED PUMP						
(A)	119623-0160		9503-		1	CDE GH KLMNO QR TU XYZ CDEFGHIJKLMNOPQRSTUV	
(B)	981355-0310		9503-		1	F	
(B)	119623-0160		9503-		1	J L Q T	
(B)	119623-0160		9512-		1	S	
4	SPRING: VALVE, FUEL FEED PUMP						
	981351-7020		9503-		2	CDEFGH KLMNO QR TU XYZ CDEFGHIJKLMNOPQRSTUV	
5	VALVE: FUEL FEED PUMP						
	981351-6020		9503-		2	CDEFGH KLMNO QR TU XYZ CDEFGHI K MNOP R UV	
	115755-0020		9503-		2	J L Q T	
	981351-6020		9503-9511		2	S	
	115755-0020		9512-		2	S	
7	GASKET: PLUG, FUEL FEED PUMP						
	119623-0160		9503-		1	CDEFGH KLMNO QR TU XYZ CDEFGHI K MNOP R UV	
	119623-0160		9503-9511		1	S	
8	BOLT: EYE, FUEL OUTLET, FEED PUMP						
(A)	115619-0820		9503-		1	CDEFGH KLMNO QR TU XYZ CDEFGHIJKLMNOPQRSTUV	
(B)	981355-0540		9503-		1	F	
(B)	115759-0600		9503-		1	J L	
(B)	115759-0660		9503-		1	Q T	
(B)	115759-0660		9512-		1	S	
9	GASKET: EYE BOLT, OUTLET, FUEL FEED PUMP						
	115759-0010		9503-		2	CDEFGH KLMNO QR TU XYZ CDEFGHIJKLMNOPQRSTUV	
10	ADAPTER: EYE BOLT, FUEL FEED PUMP						
	115759-0030		9503-		1	CDE GH KLMNO QR TU XYZ CDEFGHIJKLMNOPQRSTUV	
11	BOLT: EYE, FUEL INL, FEED PUMP						
(A)	515759-0270		9503-		1	CDEFGH KLMNO QR TU XYZ CDEFGHIJKLMNOPQRSTUV	

FEED PUMP; INJECTION PUMP

0-84
FIG-NO.

Model code header (applicability columns):

```
88888 88888 88888 88888 88888 88888 88888 88888 88888 888
99999 99999 99999 99999 99999 99999 99999 99999 99999 999
44444 44444 44444 44777 77777 77777 77777 77777 77777 777
33333 33334 44444 44000 00000 00000 00000 00011 11111 111
34466 78880 24446 67111 11222 23344 44466 88800 03333 677
51200 31884 81692 56114 57007 92923 89918 18904 84479 836
73937 21190 89727 91464 57370 92605 70155 55425 98882 082
00300 04963 04725 28722 77956 43582 92975 79260 27732 780
78466 98702 43515 94940 96070 91725 46251 39759 23424 421
10321 21002 21114 01001 00201 01101 00010 20112 01101 000
ABCDE FGHIJ KLMNO PQRST UVWXY ZABCD EFGHI JKLMN OPQRS TUVWX
```

KEY. NO	PART NAME / PART NUMBER	ITC	APPLIED DATE	LR	QTY	Applicability	Remarks
12	GASKET; EYE BOLT, INL, FUEL FEED PUMP						
	115759-0010		9503-		2	CDE FGH KLMNO QR TU XY Z CD EFGHI JKLMN OPQRS TUV	
13	RING; SNAP, TAPPET, FUEL FEED PUMP						
	981355-0250		9503-		1	CDE FGH KLMNO QR TU XY Z CD EFGHI JKLMN OPQRS TUV	
15	HOUSING; FUEL FEED PUMP						
	515751-0120		9503-		1	CDE GH KLMNO QR TU XY Z CD EFGHI K MN OP R UV	
	115751-0250		9503-		1	F	
	515751-0110		9503-		1	J L Q T	
	515751-0120		9503-9511		1	S	
	515751-0110		9512-		1	S	
16	PISTON; FUEL FEED PUMP						
	981351-2050		9503-		1	CDE FGH KLMNO QR TU XY Z CD EFGHI JKLMN OPQRS TUV	
17	SPRING; PISTON, FUEL FEED PUMP						
	981351-3030		9503-		1	CDE FGH KLMNO QR TU XY Z CD EFGHI JKLMN OPQRS TUV	
18	GASKET; PISTON PLUG, FUEL FEED PUMP						
	981355-0350		9503-		1	CDE FGH KLMNO QR TU XY Z CD EFGHI JKLMN OPQRS TUV	
19	PLUG; PISTON SPRING, FUEL FEED PUMP						
	897027-4310		9503-		1	C XY D G I J LM P	
	894171-1850		9503-		1	DE FGH KLMNO QR TU Z C EF H K NO R UV	
	894171-1850		9503-		1	Q T	
	897027-4310		9503-9511		1	S	
	894171-1850		9512-		1	S	
22	VALVE; REGULATING, INJ PUMP						
	894380-6610		9503-		1	A	
	894380-6600		9503-		1	B W B	
	894174-8190		9503-		1	IJ P S A	STAMP 06
	894454-2530		9503-		1	V	
	894445-5750		9503-		1	V	
23	RING; SPRING, REGULATING VALVE, INJ PUMP						
	894227-6430		9503-		1	AB IJ P S VW AB	
	894227-6430		9503-		1	V	
24	GASKET; REGULATING VALVE, INJ PUMP						
	894227-6410		9503-		1	AB IJ P S VW AB	
25	GASKET; REGULATING VALVE, INJ PUMP						
	894227-6400		9503-		1	AB IJ P S VW AB	
26	SCREW; COVER FIX, FUEL FEED PUMP						
	894227-4790		9503-		2	AB IJ P S VW AB	
27	COVER; FUEL FEED PUMP						
	894227-4780		9503-		1	AB IJ P S VW AB	

0-84 FEED PUMP; INJECTION PUMP

FIG-NO.

```
88888 88888 88888 88888 88888 88888 88888 88888 88888 888
99999 99999 99999 99999 99999 99999 99999 99999 99999 999
44444 44444 44444 44777 77777 77777 77777 77777 77777 777
33333 33334 44444 44000 00000 00000 00000 00011 11111 111
34466 78880 24446 67111 11222 23344 44466 88800 03333 677
51200 31884 81692 56114 57007 92923 89918 18904 84479 836
73937 21190 89727 91464 57370 92605 70155 55425 98882 082
00300 04963 04725 28722 77956 43582 92975 79260 27732 780
78466 98702 43515 94940 96070 91725 46251 39759 23424 421
10321 21002 21114 01001 00201 01101 00010 20112 01101 000
ABCDE FGHIJ KLMNO PQRST UVWXY ZABCD EFGHI JKLMN OPQRS TUVWX
```

KEY. NO	PART NAME / PART NUMBER	ITC	APPLIED DATE	LR	QTY	Applicability	Remarks
28	TAPPET ASM: FUEL FEED PUMP						
	515754-0010		9503-		1	CDE FGH KLMNO QR T U XY Z CD EFGHI JKLMN OPQRS TUV	
29	ROLLER: TAPPET, FUEL FEED PUMP						
	981351-4030		9503-		1	CDE FGH KLMNO QR T U XY Z CD EFGHI JKLMN OPQRS TUV	
30	PIN: TAPPET ROLLER, FUEL FEED PUMP						
	981351-4100		9503-		1	CDE FGH KLMNO QR T U XY Z CD EFGHI JKLMN OPQRS TUV	
31	GUIDE: TAPPET, FUEL FEED PUMP						
	115759-0020		9503-		2	CDE FGH KLMNO QR T U XY Z CD EFGHI JKLMN OPQRS TUV	

MEMO

0-85	AUTO TIMER; INJECTION PUMP
FIG-NO.	

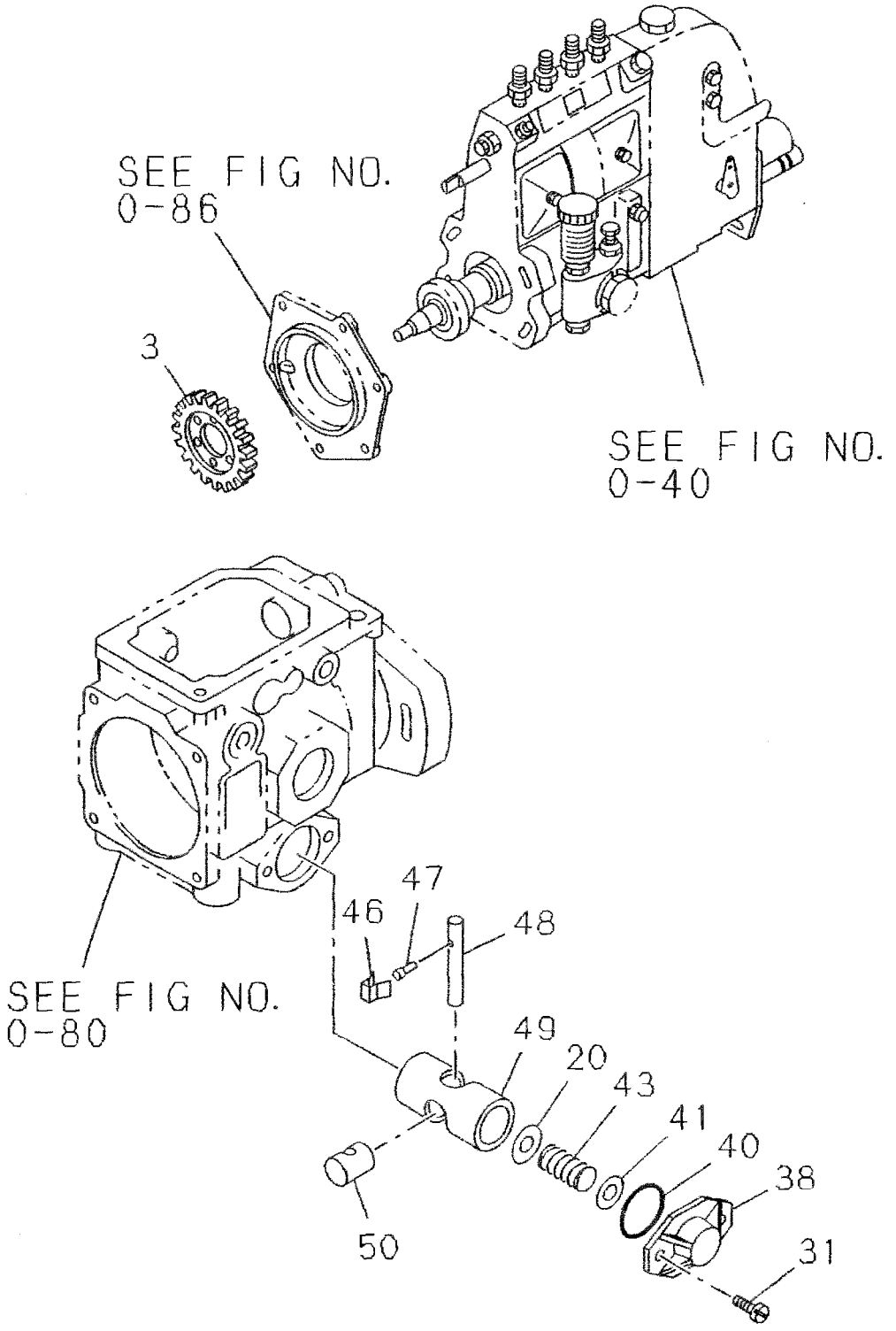

085A0150796

AUTO TIMER; INJECTION PUMP

0-85

FIG-NO.

KEY. NO	PART NAME / PART NUMBER	I T C	APPLIED DATE	L R	Q T Y	8888888888888888888888888888888888888888888888888888 9999999999999999999999999999999999999999999999999999 4444444444444444777777777777777777777777777777777777 3333333334444444400000000000000000000000011111111111 3446678880244466711111222223344444466880003333677 5120031884816925611457007929238991818904844798 36 7393721190897279146457370926057015554259888 2082 0030004963047252872277956435829297579260277 32780 7846698702435159494096070917254625139759234 24421 1032121002211140100100201011010001020112011 01000 ABCDEFGHIJKLMNOPQRSTUVWXYZABCDEFGHIJKLMNOPQRSTUVWX	Remarks
20	SHIM; INNER SPRING, TIMER, INJ PUMP						
	894227-4950		9503-		1	AB IJ P S VW AB	
31	SCREW; TIMER COVER, INJ PUMP						
	894313-2760		9503-		2	AB I S VW AB	
	894227-5010		9503-		2	J P	
38	COVER; TIMER, INJ PUMP						
	894473-1200		9503-		1	AB I S VW AB	
	894242-9670		9503-		1	J	
	894227-5000		9503-		1	P	
40	GASKET; TIMER COVER, INJ PUMP						
	894227-4910		9503-		1	AB IJ P S VW AB	
41	SHIM; OUTER SPRING, TIMER, INJ PUMP						
	894227-4950		9503-		AR	AB IJ P S VW AB	T=0.60
	894227-4960		9503-		AR	AB IJ P S VW AB	T=0.70
	894227-4970		9503-		AR	AB IJ P S VW AB	T=0.90
	894227-4980		9503-		AR	AB IJ P S VW AB	T=1.00
	894227-4990		9503-		AR	AB IJ P S VW AB	T=1.20
	894121-6200		9503-		AR	AB IJ P S VW AB	T=2.40
43	SPRING; PISTON, TIMER, INJ PUMP						
	894380-6560		9503-		1	AB W	
	894313-2270		9503-		1	I S A	L=35.5
	894313-2410		9503-		1	I S A	L=35.6
	894313-2600		9503-		1	I	
	894418-0300		9503-		1	J	
	894174-8330		9503-		1	P	K=2.25KG/MM
	894174-8340		9503-		1	P	
	894174-8350		9503-		1	P	K=2.05KG/MM
	894174-8360		9503-		1	P	
	894174-8370		9503-		1	P	
	894174-8380		9503-		1	P	
	894473-1190		9503-		1	S	L=35.4
	894313-6710		9503-		1	V	L=43
	894316-6690		9503-		1	V	K=2.25 KG/MM
	894343-3400		9503-		1	V	L=38.5
	894313-2000		9503-		1	B	L=35.7
46	CLIP; HOLDER PIN, TIMER, INJ PUMP						
	894227-4880		9503-		1	AB IJ P S VW AB	
47	PIN; HOLDER PIN, TIMER, INJ PUMP						
	894227-4870		9503-		1	AB IJ P S VW AB	
48	PIN; ROLLER HOLDER, TIMER, INJ PUMP						
	894227-4860		9503-		1	AB IJ P S VW AB	
49	PISTON; TIMER, INJ PUMP						
	894174-7390		9503-		1	AB J P	

0-85 AUTO TIMER; INJECTION PUMP

FIG-NO.

KEY NO	PART NAME / PART NUMBER	ITC	APPLIED DATE	LR	QTY	A 8943357071	B 8943413080	C 8943429343	D 8943603062	E 8943607061	F 8943732092	G 8943811481	H 8943881970	I 8943889600	J 8944040322	K 8944288042	L 8944419431	M 8944467751	N 8944492211	O 8944627554	P 8944659290	Q 8944761841	R 8970114790	S 8970116240	T 8970144201	U 8970155790	V 8970177760	W 8970203902	X 8970207570	Y 8970270601	Z 8970299490	A 8970322311	B 8970396571	C 8970420820	D 8970435251	E 8970487940	F 8970490260	G 8970491920	H 8970615751	I 8970685510	J 8970815732	K 8970885990	L 8970894271	M 8971002651	N 8971045092	O 8971089220	P 8971348731	Q 8971348741	R 8971378320	S 8971392241	T 8971680740	U 8971738820	V 8971762010	W	X	Remarks
49	PISTON; TIMER, INJ PUMP																																																							
	897014-3150		9503-		1									I										S								A	B																							
	894408-5090		9503-		1																						V																													
50	SLIDER; TIMER PISTON, INJ PUMP																																																							
	894227-4930		9503-		1	A	B							I	J						P			S			V	W				A	B																							

MEMO

0-86	MISCELLANEOUS PARTS; INJECTION PUMP
FIG-NO.	(NO.1)

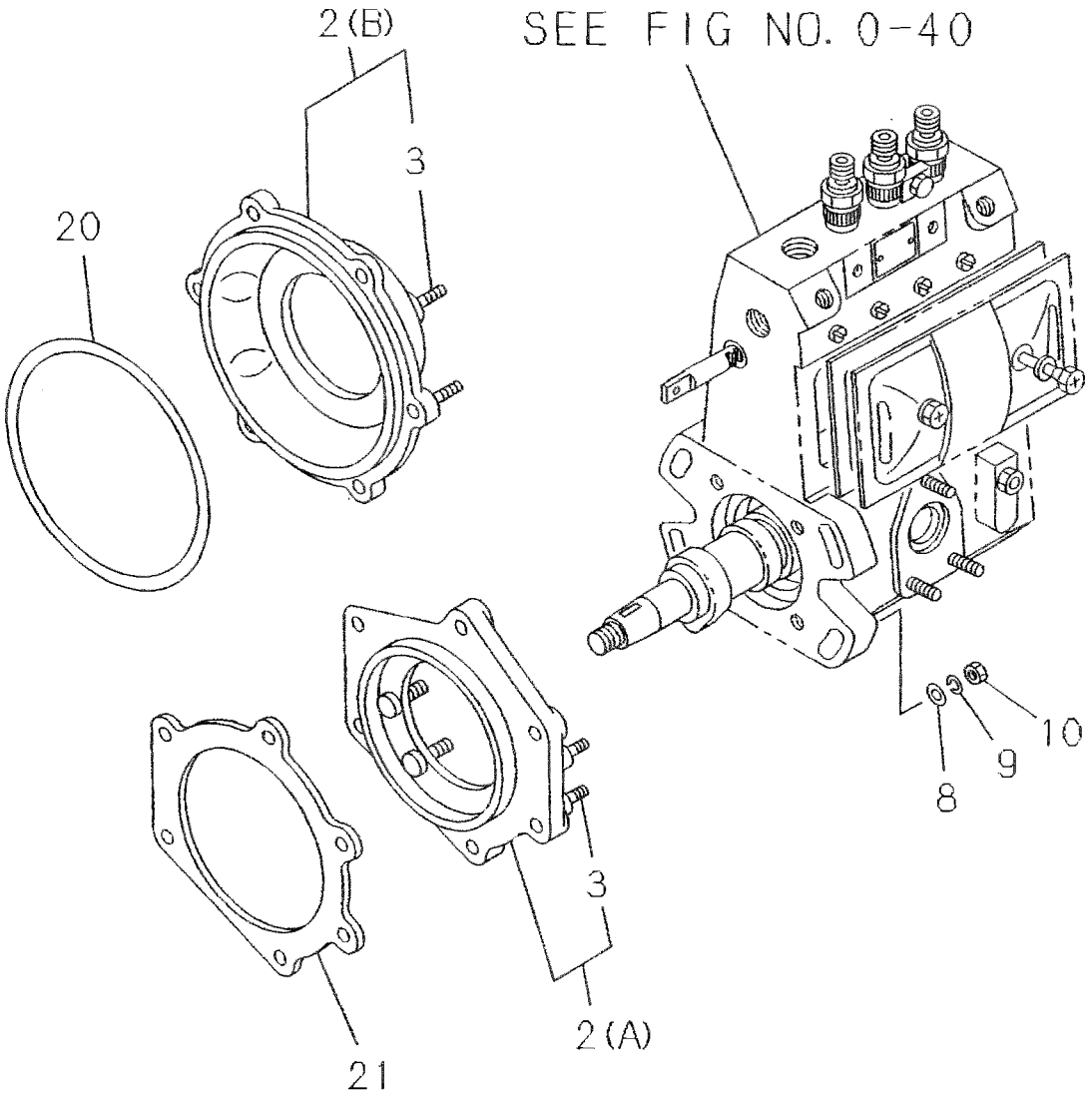

086A0150796

MISCELLANEOUS PARTS; INJECTION PUMP

(NO.2)

0-86

FIG-NO.

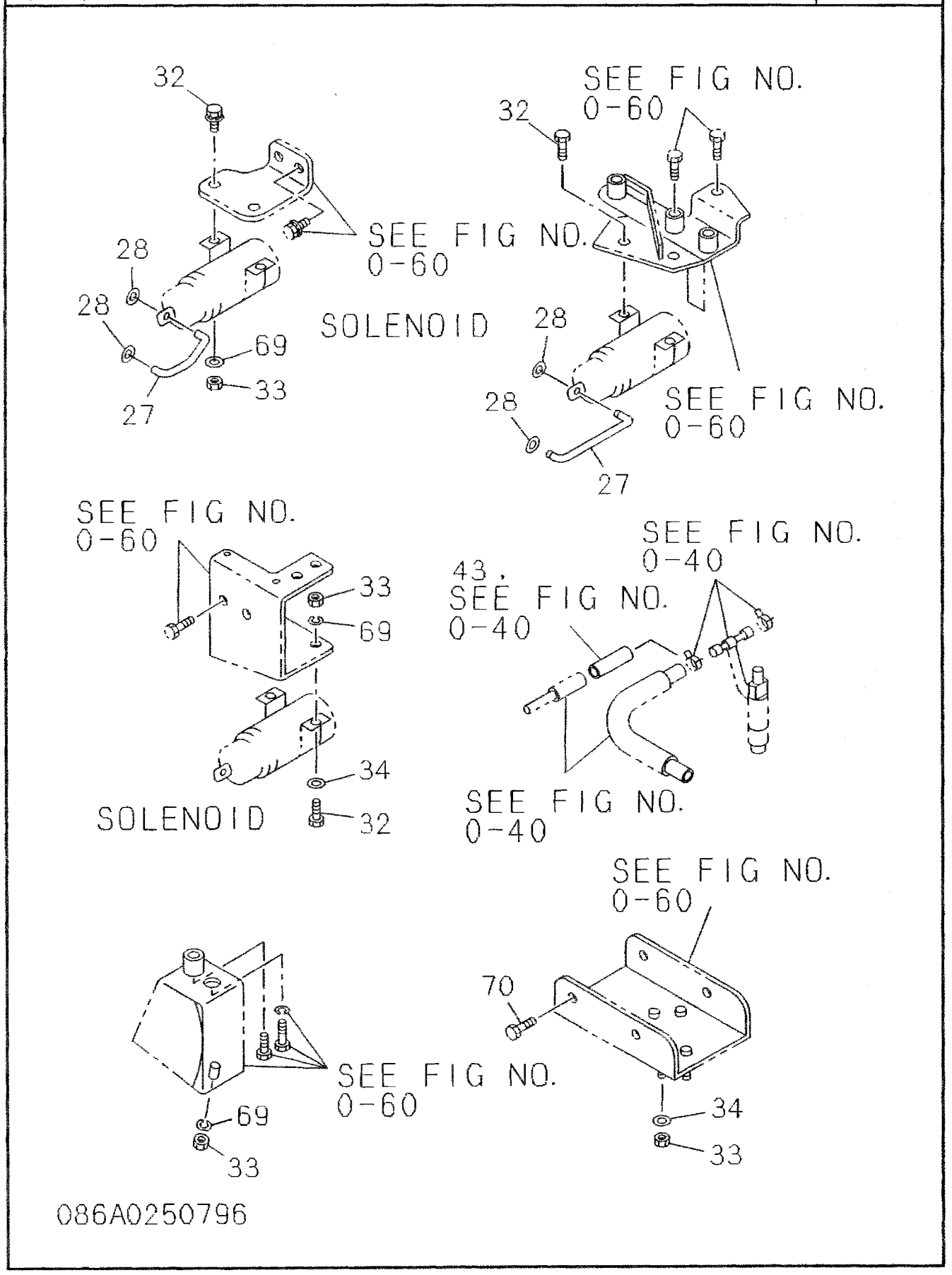

086A0250796

0-86 A MISCELLANEOUS PARTS; INJECTION PUMP

FIG-NO.

4JB1

KEY NO	PART NAME / PART NUMBER	I T C	APPLIED DATE	L R	QTY	ABCDE	FGHIJ	KLMNO	PQRST	UVWXY	ZABCD	EFGHI	JKLMN	OPQRS	TUVWX	Remarks
2	BRACKET; HSG & TIMER, INJ PUMP															
(A)	894167-7870		9503-		1	B D		L N	R T		B					
(B)	894416-8610		9503-		1	A C E	FGHIJ	K M	PQ S	UVWX	Z CD	EFGHI	JKLMN	PQRS		
(B)	894167-7870		9503-		1			O			A			O		
3	STUD; HSG BRKT, INJ PUMP															
	904101-0300		9503-		4	ABCDE	FGHIJ	KLMNO	PQRST	UVWX	ZABCD	EFGHI	JKLMN	OPQRS		M10X30 L=45
8	WASHER; PL, HSG BRKT, INJ PUMP															
	909164-5100		9503-		4	ABCDE	FGHIJ	KLMNO	PQRST	UVWX	ZABCD	EFGHI	JKLMN	OPQRS		ID=10
9	WASHER; LK, HSG BRKT, INJ PUMP															
	909150-6100		9503-		4	ABCDE	FGHIJ	KLMNO	PQRST	UVWX	ZABCD	EFGHI	JKLMN	OPQRS		ID=10
10	NUT; HSG BRKT, INJ PUMP															
	515639-0020		9503-		4	ABCDE	FGHIJ	KLMNO	PQRST	UVWX	ZABCD	EFGHI	JKLMN	OPQRS		
20	GASKET; INJ PUMP															
	894109-7070		9503-		1	ABCDE	FGHIJ	KLMNO	PQRST	U	ZA CD	EFGHI	J	QRS		
21	GASKET; INJ PUMP					—ALSO INCLUDED IN GASKET SET(ENGINE)										
	894129-3481	A	9503-9601		1					VWX	B		KLMN	OP		
	897095-5480		9602-		1					VWX	B		KLMN	OP		
27	ROD; LINK															
	894152-9040		9503-		1					V						
	894448-0030		9503-		1	DE	FG I	KLM	PQRST	U	A					
	894448-0030		9407-		1		G									
	897043-4170		9503-		1			KL								
	894446-9000		9503-		1					WX						
	894463-4400		9503-		1						Z					
	894450-7240		9503-		1						B		MN			
28	WASHER; PL															
	909160-5050		9503-		2	DE	FG I	KLM	PQRST	UVWX	ZA		MN			ID=5
32	BOLT; FUEL CUT VALVE, INJ PUMP															
	050140-6140		9503-		2	DE	F I	KLM	PQRST	U WX	A					M6X14 W/WASHER
	050140-6140		9407-		2		G									M6X14 W/WASHER
	050140-6180		9503-		2					V						M6X18 W/WASHER
	050040-6160		9503-		2					WX						M6X16 W/LK WASHER
	050040-8450		9503-		2						Z					M8X45 W/LK WASHER
33	NUT; FUEL CUT VALVE, INJ PUMP															
	909110-5060		9503-		2					V	B		MN			M6
	909110-5060		9503-		4						Z					M6
34	WASHER; LK, FUEL CUT VALVE, INJ PUMP															
	909160-6060		9503-		2					VWX	B		MN			ID=6
	909160-6060		9503-		4					WX	Z					ID=6
43	PIPE ASM; FUEL OVERFLOW, INJ PUMP															
	894326-7210		9503-		1					WX						

MISCELLANEOUS PARTS; INJECTION PUMP

0-86 A

FIG-NO.

KEY. NO | PART NAME

PART NUMBER	I T C	APPLIED DATE	L R	Q T Y	4JB1 PPPPP AAAAA 0000 1234 ABCDE	PPPPP AAAAA 00001 56892 FGHIJ	PPPPP AAAAA 11111 33456 U G KLMNO	PPPPP AAAAA 11122 78901 PQRST	PPPP ABBB 2 00 2 23 UVWXY	PPPPP DDFHK 0 1 ZABCD	PPPPP KKKKK 0000L 1234 EFGHI	PPPPP KLLLL L U00 0 G11 1 U G JKLMN	PPPPP LLNNN 00 00 22 11 U U F G OPQRS	TUVWX	Remarks
69 WASHER: LK															
909150-5060		9503-		2					V	B		MN			ID=6

0-86 B MISCELLANEOUS PARTS; INJECTION PUMP

FIG-NO.

Applicability codes (column heads):

4JB1:
PPPPP PPPPP PPPPP P PPT TTT
YYYYY VVVWW WWWWW W TTP PPP
0000 00 0000000 OOB KKX
1234 12 2346789 0 0
1 1
ABCDE FGHIJ KLMNO PQRST UVWXY

A-4JB1:
PPPPP PPPPP PPPPP PPPPP P
AAAAA AAAAA AAAAA AAYYY Y
AAAAA AAAAA AAAAA AWAAA A
0000 00000 11111 10 00 0
1234 56789 01234 51 12 3
ZABCD EFGHI JKLMN OPQRS TUVWX

KEY NO	PART NAME / PART NUMBER	ITC	APPLIED DATE	LR	QTY	4JB1	A-4JB1	Remarks
2	BRACKET; HSG & TIMER, INJ PUMP							
(A)	894167-7870		9503-		1	N		
(B)	894416-8610		9503-		1	F G I J K L O P	Z A B C D E F G H I J L M N O P Q S T	
(B)	894167-7870		9503-		1		K R	
3	STUD; HSG BRKT, INJ PUMP							
	904101-0300		9503-		4	F G I J K L M N O P	Z A B C D E F G H I J L M N O P Q R S T	M10X30 L=45
8	WASHER; PL, HSG BRKT, INJ PUMP							
	909164-5100		9503-		4	F G I J K L M N O P	Z A B C D E F G H I J L M N O P Q R S T	ID=10
9	WASHER; LK, HSG BRKT, INJ PUMP							
	909150-6100		9503-		4	F G I J K L M N O P	Z A B C D E F G H I J L M N O P Q R S T	ID=10
10	NUT; HSG BRKT, INJ PUMP							
	515639-0020		9503-		4	F G I J K L M N O P	Z A B C D E F G H I J L M N O P Q R S T	
20	GASKET; INJ PUMP							
	894109-7070		9503-		1	A B D E F G H I J K L M O P R S T U V W	Z A B C D E F G H I J L M N O Q S T	
21	GASKET; INJ PUMP							
	897095-5480		9602-		1	C N	K R	
	894129-3481	A	9503-9601		1	C N		
27	ROD; LINK							
	894448-0030		9503-		1	J M O P	Z A D E G H I J L M O	
	894450-7240		9503-		1	N		
28	WASHER; PL							
	909160-5050		9503-		2	J M N O P	Z A D E G H I J L M O	ID=5
32	BOLT; FUEL CUT VALVE, INJ PUMP							
	050140-6140		9503-		2	J M O P	Z A D E M	M6X14 W/WASHER
	050140-6180		9503-		2		I J L O	M6X14 W/WASHER
33	NUT; FUEL CUT VALVE, INJ PUMP							
	909110-5060		9503-		2	N		M6
34	WASHER; LK, FUEL CUT VALVE, INJ PUMP							
	909160-6060		9503-		2	N		ID=6
69	WASHER; LK							
	909150-5060		9503-		2	N		ID=6

MEMO

0-87	COUPLING; INJECTION PUMP
FIG-NO.	

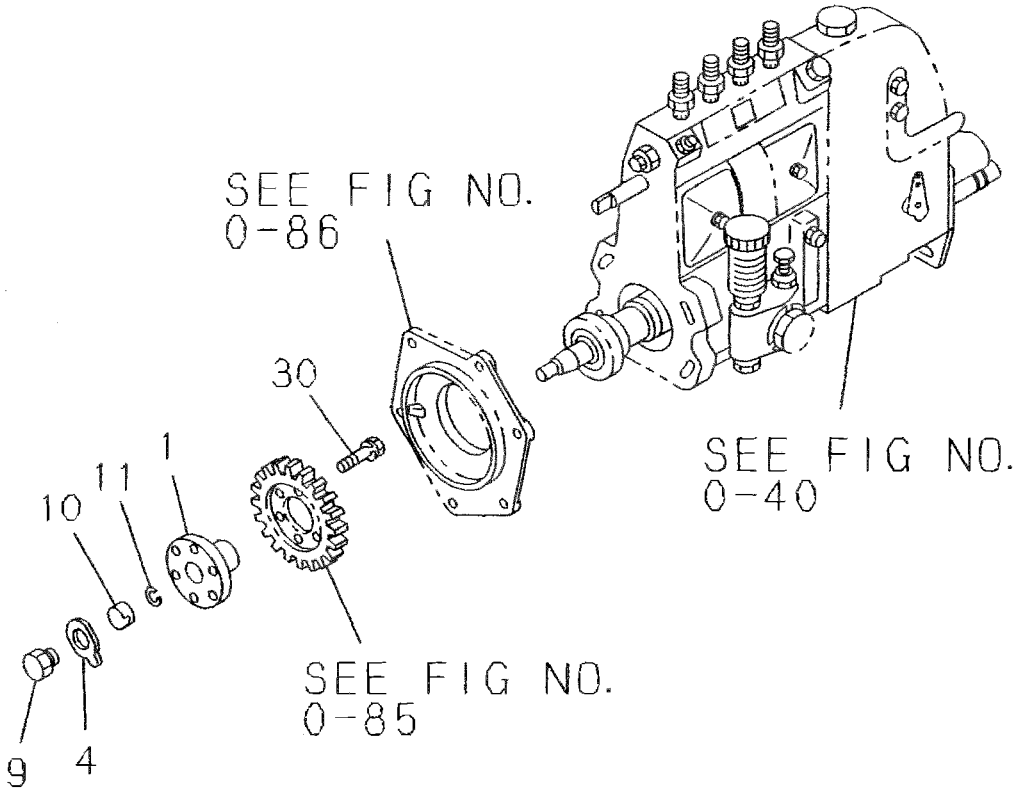

087A0150796

COUPLING;INJECTION PUMP

0-87 A

FIG-NO.

KEY. NO	PART NAME	PART NUMBER	I T C	APPLIED DATE	L R	Q T Y	4JB1 PPPPP AAAAA 0000 1234	PPPPP AAAAA 0000 5689	PPPPP AAAAA 1111 2334 U G	PPPPP AAAAA 1112 7890	PPPPP AABBS 22 00 12 23	PPPPP DDFHK 0 1	PPPPP KKKKK 0000L 1234	PPPPP KKLLL L U00 0 G11 1 U G	PPPPP LLNNN 00 00 22 11 U F U G	Remarks
							ABCDE	FGHIJ	KLMNO	PQRST	UVWXY	ZABCD	EFGHI	JKLMN	OPQRS TUVWX	
1	COUPLING; INJ PUMP DRIVE															
	894167-8030			9503-		1	ABCDE	F HI	KLM	PQRS	UVWX	ZABC		KLM	OP	
	894334-9250			9503-		1		G J	NO	T						
4	PLATE; LK.COUPLING FIX, INJ PUMP															
	509539-0020			9503-		1	ABCDE	FGHIJ	KLMNO	PQRST	U	ZABC		MN		
	894476-1850			9503-		1					VWX			KL	OP	
9	BOLT; PLATE TO COUPLING, INJ PUMP															
	909662-0070			9503-		1	ABCDE	FGHIJ	KLMNO	PQRST	UVWX	ZABC		KLMN	OP	
10	NUT; PLATE TO COUPLING, INJ PUMP															
	988410-5020			9503-		1	ABCDE	FGHIJ	KLMNO	PQRST	UVWX	ZABC		KLMN	OP	
11	WASHER; PLATE TO COUPLING, INJ PUMP															
	515619-0480			9503-		1	ABCDE	FGHIJ	KLMNO	PQRST	UVWX	ZABC		KLMN	OP	
30	BOLT; GEAR TO COUPLING															
	894457-5170			9503-		6	ABCDE	FGHIJ	KLMNO	PQRST	UVWX	ZABC		KLMN	OP	

0-87 B COUPLING;INJECTION PUMP

FIG-NO.

KEY NO	PART NAME / PART NUMBER	ITC	APPLIED DATE	LR	QTY	4JB1 (ABCDEFGHIJKLMNOPQRSTUVWXY)	A-4JB1 (ZABCDEFGHIJKLMNOPQRSTUVWX)	Remarks
1	COUPLING; INJ PUMP DRIVE							
	894167-8030		9503-		1	ABCDEFG IJKLMNOP		
	897160-5950		9503-		1		ZABCDEFG	
	894167-8030		9503-9612		1		Q S	
	897160-5950		9701-		1		Q S	
	894167-8030		9503-9511		1		R	
	897160-5950		9512-		1		R	
4	PLATE; LK, COUPLING FIX, INJ PUMP							
	509539-0020		9503-		1	ABCDEFG IJKLMNOP	ZABCDEFG QRS	
	894476-1850		9503-		1	N		
9	BOLT; PLATE TO COUPLING, INJ PUMP							
	909662-0070		9503-		1	AB DEFG IJKLM OP	ZABCDEFG Q S	
	909662-0070	A	9503-9601		1	C N	R	
10	NUT; PLATE TO COUPLING, INJ PUMP							
	988410-5020		9503-		1	ABCDEFG IJKLMNOP	ZABCDEFG QRS	
11	WASHER; PLATE TO COUPLING, INJ PUMP							
	515619-0480		9503-		1	ABCDEFG IJKLMNOP	ZABCDEFG QRS	
30	BOLT; GEAR TO COUPLING							
	894457-5170		9503-		6	ABCDEFG IJKLMNOP	ZABCDEFG QRS	

1

1-01	ACCELERATOR PEDAL AND CONTROL
FIG-NO.	

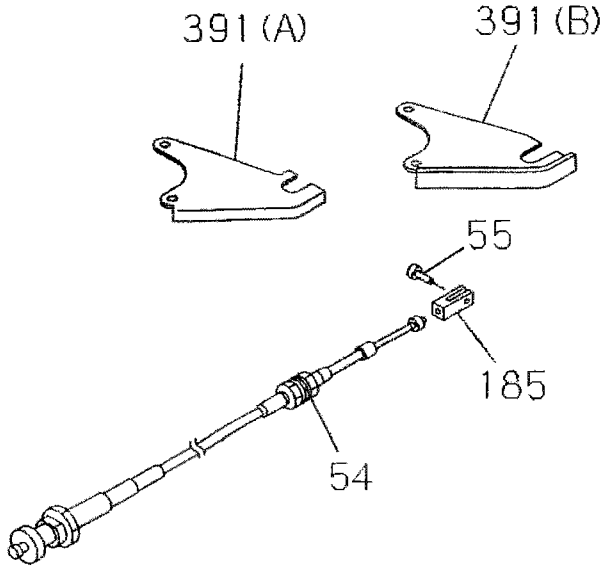

101A0150796

ACCELERATOR PEDAL AND CONTROL

1-01 A

FIG-NO.

KEY. NO	PART NAME					4JB1										Remarks
	PART NUMBER	ITC	APPLIED DATE	LR	QTY	PPPPP AAAAA 0000 1234	PPPPPP AAAAAA 00001 56892	PPPPPP AAAAAA 11111 33456 U G	PPPPPP AAAAAA 11122 78901	PPPP ABBB 2 00 2 23	PPPPP DDFHK 0 1	PPPPP KKKKK 0000LL 1234	PPPPP KLLLL L U00 0 G11 1 U G	PPPPP LLNNN 00 00 22 11 U U F G		
						ABCDEFGHIJ		KLMNO	PQRST	UVWXY	ZABCD	EFGHI	JKLMN	OPQRS	TUVWX	
391	BRACKET; ENG CONT															
(A)	894428-8050		9503-		1	AB DE	F I	KLM	P R	U						
(B)	897025-7420		9503-		1			J NO								

1-01 B ACCELERATOR PEDAL AND CONTROL

FIG-NO.

KEY. NO	PART NAME	PART NUMBER	ITC	APPLIED DATE	L R	QTY	4JB1	A-4JB1	Remarks
54	CABLE: ENG CONT								
		123210-5970		9410-9410		1	G		
		123210-5980		9707-		1	H		
55	PIN: JAW JOINT								
		908223-6170		9410-9410		1	G		
		908223-6170		9707-		1	H		
185	JOINT: JAW, CONT CABLE								
		923219-6060		9410-9410		1	G		
		923219-6060		9707-		1	H		

MEMO

1-10	RADIATOR
FIG-NO.	

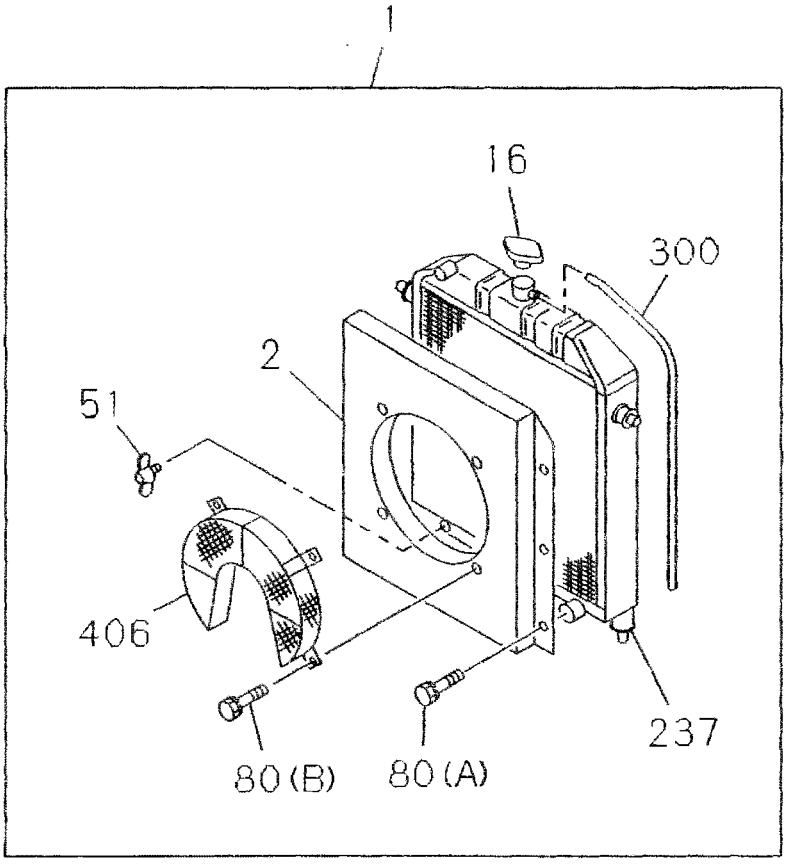

110A0150796

RADIATOR

1-10 A
FIG-NO.

Engine: 4JB1

Model columns: A PA, B PA01, C PA02, D PA03, E PA04, F PA05, G PA06, H PA08, I PA09, J PA12, K PA13, L PA13UG, M PA14, N PA15, O PA16, P PA17, Q PA18, R PA19, S PA20, T PA21, U PA22, V PB, W PB02, X PB03, Y, Z PD, A PD01, B PF, C PH, D PK, E PK01, F PK02, G PK03, H PK04, I PKL, J PKL01, K PL, L PLUG, M PL01, N PL01UG, O PL02, P PL02UF, Q PN, R PN01, S PN01UG, T, U, V, W, X

KEY NO	PART NAME / PART NUMBER	ITC	APPLIED DATE	LR	QTY	ABCDE	FGHIJ	KLMNO	PQRST	UVWXY	ZABCD	EFGHI	JKLMN	OPQRS	TUVWX	Remarks
1	RADIATOR ASM															
	897033-1170		9503-		1						Z					
	589214-0920		9503-		1								N			
2	GUIDE; FAN															
	894469-8790		9503-		1								N			
16	CAP; RAD															
	921450-6030		9503-		1						Z		N			
51	PLUG; DRAIN															
	909809-0980		9503-		1						Z					
	989214-2040		9503-		1								N			
80	BOLT; FAN GUIDE															
(A)	901900-8160		9503-		6						Z					M8X16 W/LK WASHER
(A)	894469-8920		9503-		6								N			
(B)	901900-8160		9503-		4						Z		N			M8X16 W/LK WASHER
237	CUSHION; RUBBER, STAY, WINDOW															
	894469-8840		9503-		4								N			
300	HOSE; WATER, OVERFLOW, RAD															
	909914-2090		9503-		1						Z					L=850
	894469-8820		9503-		1								N			
406	GUARD; FAN															
	894469-8870		9503-		1								N			

1-10 B RADIATOR

FIG-NO.

Model columns (4JB1: A–Y; A-4JB1: Z–X):

```
4JB1                                          A-4JB1
PPPPPPPPPPPPPPPP PPTTTT                        PPPPPPPPPPPPPPPPPPPPP
YYYYYVVVWWWWWWWW TTPPPP                        AAAAAAAAAAAAAAAAAYYYY
 0000 00 0000000 QQBKKX                        AAAAAAAAAAAAAAAAWAAAA
 1234 12 2346789  0  0                          0000000001111110 000
                  1  1                          1234567890123451 123
ABCDEFGHIJKLMNOPQRSTUVWXY                      ZABCDEFGHIJKLMNOPQRSTUVWX
```

KEY. NO	PART NAME / PART NUMBER	ITC	APPLIED DATE	LR	QTY	Applicable columns	Remarks
1	RADIATOR ASM						
	897025-7410		9503-		1	G H	
2	GUIDE; FAN						
	897025-0500		9503-		1	G	
16	CAP; RAD						
	921450-6030		9503-		1	G	
51	PLUG; DRAIN						
	989214-2040		9503-		1	G	
80	BOLT; FAN GUIDE						
(A)	901900-8160		9503-		6	G	M8X16 W/LK WASHER
(B)	901900-8160		9503-		4	G	M8X16 W/LK WASHER
237	CUSHION; RUBBER, STAY, WINDOW						
	894469-8840		9503-		4	G	
300	HOSE; WATER, OVERFLOW, RAD						
	894469-8820		9503-		1	G	
406	GUARD; FAN						
	894469-8870		9503-		1	G	

MEMO

1-11	RADIATOR HOSE AND SUB TANK
FIG-NO.	

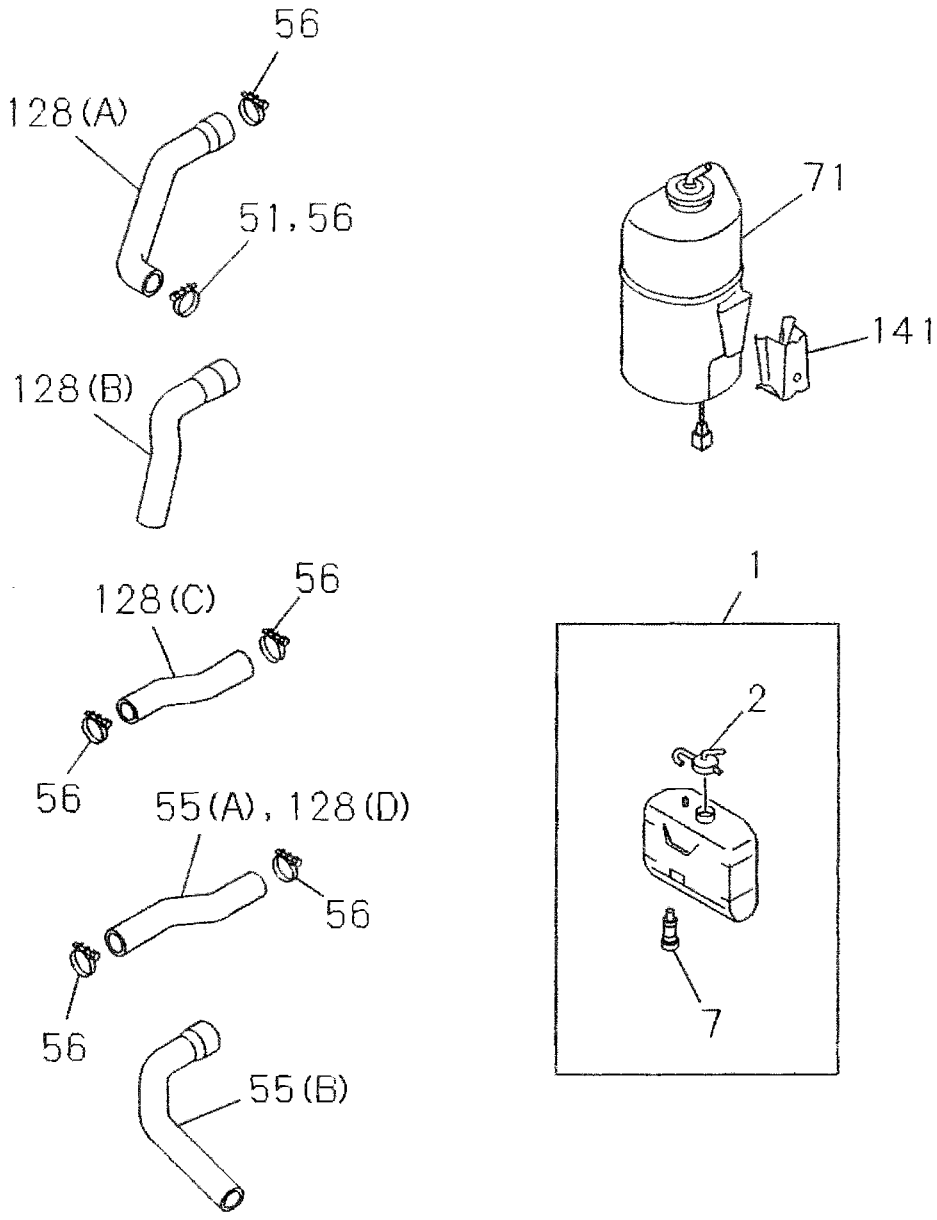

111A0150796

RADIATOR HOSE AND SUB TANK

FIG-NO. 1-11 A

Applicability (4JB1):

PPPPP PPPPPP PPPPPP PPPPPP PPPP PPPPP PPPPPP PPPPPP PPPPPP
AAAAA AAAAAA AAAAAA AAAAAA ABBB DDFHK KKKKKK KLLLLL LLNNN
0000 000011 11111 111222 2 00 0 0000L L U000 00 00
1234 56892 33456 78901 2 23 1 1234 0 G11 22 11
U G (under M); 1 (under J); U G (under N); U F (under P); U G (under S)

ABCDEFGHIJKLMNOPQRSTUVWXYZABCDEFGHIJKLMNOPQRSTUVWX

KEY NO	PART NAME / PART NUMBER	ITC	APPLIED DATE	LR	QTY	Applicability	Remarks
1	TANK; SURGE, RAD						
	894440-9690		9503-		1	G Q S T U	
2	CAP; SURGE TANK						
	894449-3630		9503-		1	G Q S T	
7	SWITCH ASM; TANK						
	582480-0020		9503-		1	G Q S T	
51	CLIP; WATER HOSE, RAD						
	509704-0471		9503-		1	M	ID=42
55	HOSE; WATER, RAD OUTLET						
(A)	894341-3620		9503-		1	M	
(A)	897024-7120		9503-		1	Z	
56	CLIP; WATER HOSE, RAD						
	509704-0490		9503-		3	M	ID=48
	909915-5121		9503-		3	Z	ID=48
	909915-0421		9503-		1	Z	ID=42
71	TANK ASM; RESERVE						
	521480-0100		9503-		1	Z	
128	HOSE; WATER, RAD INL						
(A)	897024-7110		9503-		1	Z	
(B)	894340-3900		9503-		1	M	
141	HANGER; TANK						
	897041-0220		9503-		1	Z	

1-11 B RADIATOR HOSE AND SUB TANK

FIG-NO.

KEY NO	PART NAME	PART NUMBER	ITC	APPLIED DATE	LR	QTY	4JB1	A-4JB1	Remarks
							PPPPPPPPPPPPPPPP PPTTTT YYYYYVVVWWWWWWWW TTPPPP 0000 00 0000000 00BKKX 1234 12 2346789 0 0 1 1	PPPPPPPPPPPPPPPPPPPPP AAAAAAAAAAAAAAAAAYYY AAAAAAAAAAAAAAAAWAAA 0000000001111110 000 1234567890123451 123	
							ABCDEFGHIJKLMNOPQRSTUVWXYZ	ABCDEFGHIJKLMNOPQRSTUVWX	
1	TANK; SURGE, RAD								
	894440-9690			9503-		1		A J M O	
2	CAP; SURGE TANK								
	894449-3630			9503-		1		A	
7	SWITCH ASM; TANK								
	582480-0020			9503-		1		A	
55	HOSE; WATER, RAD OUTLET								
(B)	897024-9430			9503-		1	GH		
56	CLIP; WATER HOSE, RAD								
	909915-5121			9503-		3	GH		ID=48
	909915-0421			9503-		1	GH		ID=42
128	HOSE; WATER, RAD INL								
(C)	897024-9420			9503-		1	GH		
(D)	894340-3900			9503-		1		E	

MEMO

1-30	AIR CLEANER
FIG-NO.	

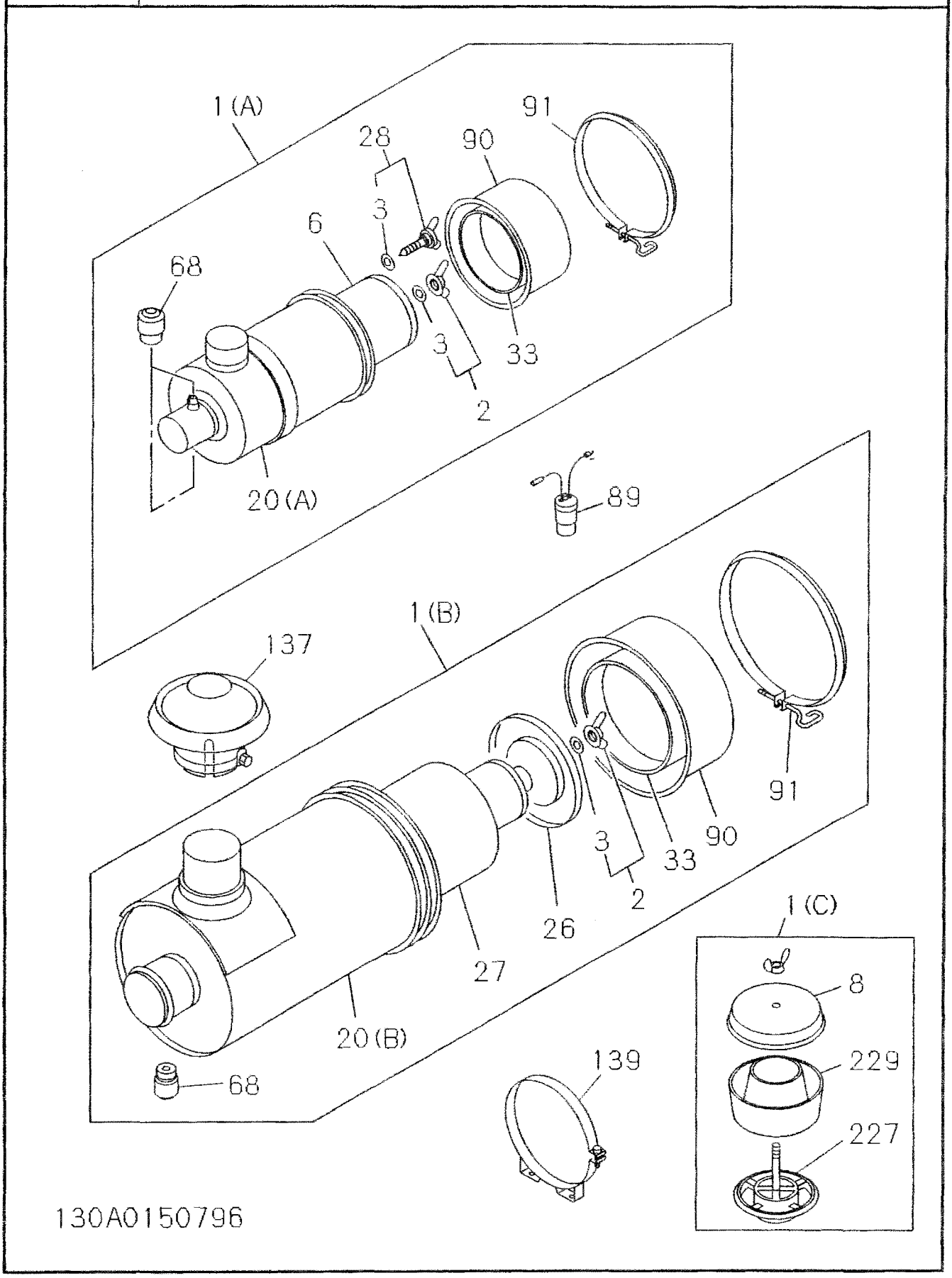

AIR CLEANER

1-30 A
FIG-NO.

KEY NO / PART NAME

4JB1 model columns: PA01 PA02 PA03 PA04 PA05 PA06 PA08 PA09 PA12 PA13 PA13UG PA14 PA15 PA16 PA17 PA18 PA19 PA20 PA21 PA22 PB2 PB02 PB03 PD0 PD01 PF PH PK PK01 PK02 PK03 PK04 PL PL01 PL PU0G PL01 PL01UG PL02 PL02UF PN PN01 PN01UG

Column letters: ABCDEFGHIJKLMNOPQRSTUVWXY ZABCDEFGHIJKLMNOPQRSTUVWX

KEY NO	PART NUMBER	ITC	APPLIED DATE	LR	QTY	4JB1	Remarks
1	CLEANER ASM; AIR						
(A)	914210-6731		9503-		1	E F K L M P Q R U Z A K L M N O P	
(A)	894152-1130		9503-		1	Q R S	
(A)	894152-1130		9406-9406		1	G	
(A)	914210-6731		9407-		1	G	
(B)	914210-6540		9503-		1	D H	
2	NUT; WING, ELEMENT						
	914217-0620		9503-		2	D H	
	914217-0620		9405-9406		1	G	
	914217-0620		9503-		1	Q R S	
3	WASHER; SEAL, WING NUT						
	914219-1770		9503-		2	D H	
	914219-1770		9503-		1	E F G K L M P Q R U Z A K L M N O P	
6	FILTER; AIR CLEANER						
	914215-1521		9503-		1	E F K L M P Q R U Z A K L M N O P	
	514215-0140		9503-		1	Q R S	
	514215-0140		9406-9406		1	G	
	914215-1521		9407-		1	G	
20	CASE ASM; ACL						
	894159-1500		9405-9406		1	G	
(A)	894159-1500		9503-		1	Q R S	
(B)	914211-3160		9503-		1	D H	
26	FILTER; ACL, INNER						
	914215-1670		9503-		1	D H	
27	FILTER; ACL, OUTER						
	914215-1661		9503-		1	D H	
28	BOLT; WING, AIR CLEANER						
	914217-0730		9503-		1	E F K L M P Q R U Z A K L M N O P	
	914217-0730		9407-		1	G	
33	BAFFLE; AIR CLEANER						
	914219-1450		9503-		1	D H	
	914219-2030		9503-		1	E F K L M P Q R U Z A K L M N O P	
	514219-0190		9503-		1	Q R S	
	514219-0190		9406-9406		1	G	
	914219-2030		9407-		1	G	
68	INDICATOR; SERVICE						
	914219-1410		9503-		1	E F G K L M P Q R U Z A K L M N O P Q R S	
	914219-2860		9503-		1	D H	
89	INDICATOR; ACL						
	181530-0050		9405-9406		1	G	
90	CUP; ACL						
	914212-0970		9503-		1	D H	

1-30 A AIR CLEANER

FIG-NO.

4JB1

KEY NO	PART NAME / PART NUMBER	ITC	APPLIED DATE	LR	QTY	Applicable (ABCDEFGHIJKLMNOPQRSTUVWXYZ)	Applicable (ABCDEFGHIJKLMNOPQRSTUVWX)	Remarks
90	CUP: ACL							
	914212-1310		9503-		1	E F K L M P Q R U Z	A K L M N O P	
	894159-1510		9503-		1		Q R S	
	894159-1510		9406-9406		1	G		
	914212-1310		9407-		1	G		
91	CLAMP							
	914217-0610		9503-		1	D H		
	914217-0740		9503-		1	E F K L M P Q R U Z	A K L M N O P	
	514217-0040		9503-		1		Q R S	
	514217-0040		9406-9406		1	G		
	914217-0740		9407-		1	G		
137	CAP: AIR CLEANER							
	894151-2880		9503-		1	D H		
	894151-2890		9503-		1	E I P R		
139	BAND: AIR CLEANER							
	514234-0590		9503-		2	D H		
	514234-0450		9503-		2	E F G K L M P Q R U	A M N	
	894365-1280		9406-9406		2	G		
	514234-0450		9407-		2	G		

AIR CLEANER

1-30 B

FIG-NO.

KEY. NO	PART NAME / PART NUMBER	ITC	APPLIED DATE	LR	QTY	4JB1 (A B C D E F G H I J K L M N O P Q R S T U V W X Y)	A-4JB1 (Z A B C D E F G H I J K L M N O P Q R S T U V W X)	Remarks
1	CLEANER ASM: AIR							
(C)	914210-6551		9707-		1		I	
(A)	894152-1130		9503-		1	G		
(A)	914210-6731		9503-		1	H	A E GH M O	
(B)	914210-6540		9707-		1		I	
2	NUT: WING, ELEMENT							
	914217-0620		9707-		2	G		
	914217-0620		9707-		2		I	
3	WASHER: SEAL, WING NUT							
	914219-1770		9503-		1	GH	A E GH M O	
	914219-1770		9707-		2		I	
6	FILTER: AIR CLEANER							
	514215-0140		9503-		1	G		
	914215-1521		9503-		1	H	A E GH M O	
8	COVER ASM: AIR CLEANER							
	914212-1550		9707-		1		I	
20	CASE ASM: ACL							
(A)	894159-1500		9503-		1	G		
(B)	914211-3160		9707-		1		I	
26	FILTER: ACL, INNER							
	914215-1670		9707-		1		I	
27	FILTER: ACL, OUTER							
	914215-1661		9707-		1		I	
28	BOLT: WING, AIR CLEANER							
	914217-0730		9503-		1	H	A E GH M O	
33	BAFFLE: AIR CLEANER							
	514219-0190		9503-		1	G		
	914219-2030		9503-		1	H	A E GH M O	
	914219-1450		9707-		1		I	
68	INDICATOR: SERVICE							
	114219-2120		9503-		1	GH	A E GH M O	
	914219-2860		9707-		1		I	
90	CUP: ACL							
	894159-1510		9503-		1	G		
	914212-1310		9503-		1	H	A E GH M O	
	914212-0970		9707-		1		I	
91	CLAMP							
	514217-0040		9503-		1	G		
	914217-0740		9503-		1	H	A E GH M O	
	914217-0610		9707-		1		I	
137	CAP: AIR CLEANER							
	894457-3440		9503-		1	G		

1-30 B AIR CLEANER

FIG-NO.

Model code header (4JB1 / A-4JB1):

```
4JB1                                               A-4JB1
PPPPP PPPPP PPPPPP P  PPT TTT                      PPPPP PPPPP PPPPP PPPPP P
YYYYY VVVWW WWWWWW W  TTP PPP                      AAAAA AAAAA AAAAA AAYYY Y
 0000  00  0 000000 0 QQB KKX                      AAAAA AAAAA AAAAA AWAAA A
 1234  12  2 346789    0   0                        0000 00000 11111 10  00 0
                       1   1                        1234 56789 01234 51  12 3
ABCDE FGHIJ KLMNO PQRST UVWXY                      ZABCD EFGHI JKLMN OPQRS TUVWX
```

KEY NO	PART NAME / PART NUMBER	ITC	APPLIED DATE	LR	QTY	4JB1	A-4JB1	Remarks
137	CAP: AIR CLEANER							
	894151-2890		9503-		1		G	
	894151-2880		9707-		1		I	
139	BAND: AIR CLEANER							
	514234-0450		9503-		2	H	A E GH M O	
	514234-0590		9707-		2		I	
227	SLEEVE							
	914211-3170		9707-		1		I	
229	BODY ASM: AIR CLEANERSLEEVE							
	114211-1700		9707-		1		I	

MEMO

1-31	AIR DUCT
FIG-NO.	

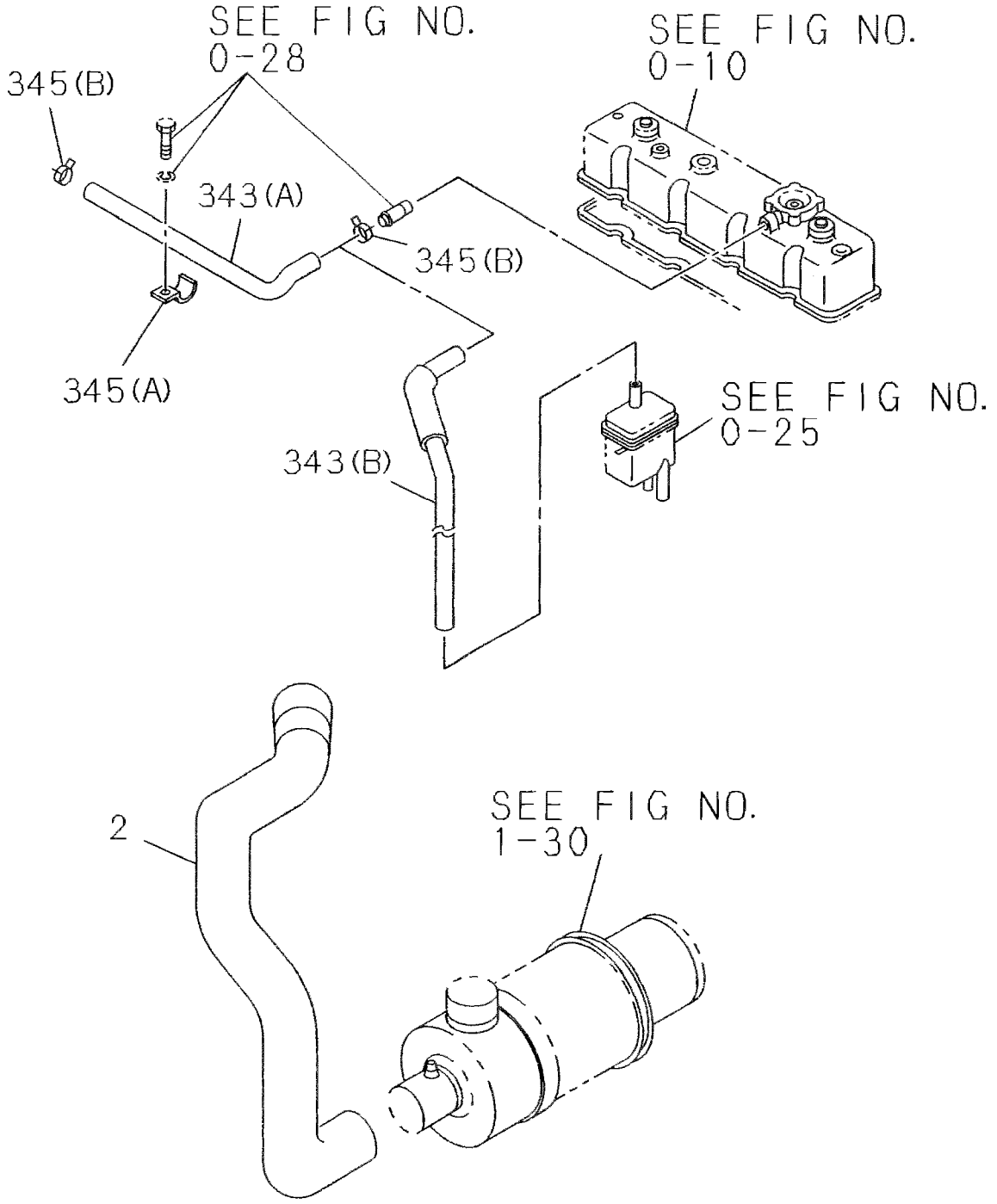

131A0150796

AIR DUCT

FIG-NO. 1-31 A

KEY. NO — PART NAME

4JB1

```
PPPPPPPPPPPPPPPPPPPPPPPPP PPPPPPPPPPPPPPPPPPPPPPPP
AAAAAAAAAAAAAAAAAAAAABBB DDFHKKKKKKKLLLLLLNNN
 0000000011111111222 00  0   0000LL U0000 00
 1234568923345678901 2 23 1  1234 0 G1122 11
            U                     1   U U  U
            G                         G F  G
ABCDEFGHIJKLMNOPQRSTUVWXYZABCDEFGHIJKLMNOPQRSTUVWX
```

KEY. NO	PART NUMBER	ITC	APPLIED DATE	L R	QTY	4JB1	Remarks
343	HOSE: ACL TO CYL HD COVER						
(A)	897031-7290		9503-		1	VWX	
(A)	894152-3620		9503-		1	ZA	
(B)	894340-2611		9503-		1	IJ	
345	CLIP: PCV HOSE						
(A)	894142-9410		9503-		1	VWX	
(B)	894121-1131		9503-		2	VWX ZA IJ	ID=20.4

1-31 B AIR DUCT

FIG-NO.

KEY. NO	PART NAME	PART NUMBER	I T C	APPLIED DATE	L R	Q T Y	4JB1	A-4JB1	Remarks
							PPPPPPPPPPPPPPPPP PPTTTT YYYYYVVVWWWWWWW TTPPP 0000 00 0000000 00BKKX 1234 12 2346789 0 0 1 1 ABCDEFGHIJKLMNOPQRSTUVWXY	PPPPPPPPPPPPPPPPPPPPP AAAAAAAAAAAAAAAAAAYYY AAAAAAAAAAAAAAAAAWAAA 0000000001111110 000 1234567890123451 123 ZABCDEFGHIJKLMNOPQRSTUVWX	
2	HOSE; AIR CLEANER								
	121437-3241	9503-				1		E	
343	HOSE; ACL TO CYL HD COVER								
(A)	897171-2610	9707-				1	H		
345	CLIP; PCV HOSE								
(B)	894121-1130	9705-				1	AB DEFG IJKLMNOP W	ZABCDEF H JKLMNOPQRS	ID=20.4
(B)	894121-1130	9705-				3	CDE	N T	ID=20.4
(B)	894121-1130	9705-				2	H	G I	ID=20.4

MEMO

1-41	FUEL PIPING; CHASSIS
FIG-NO.	

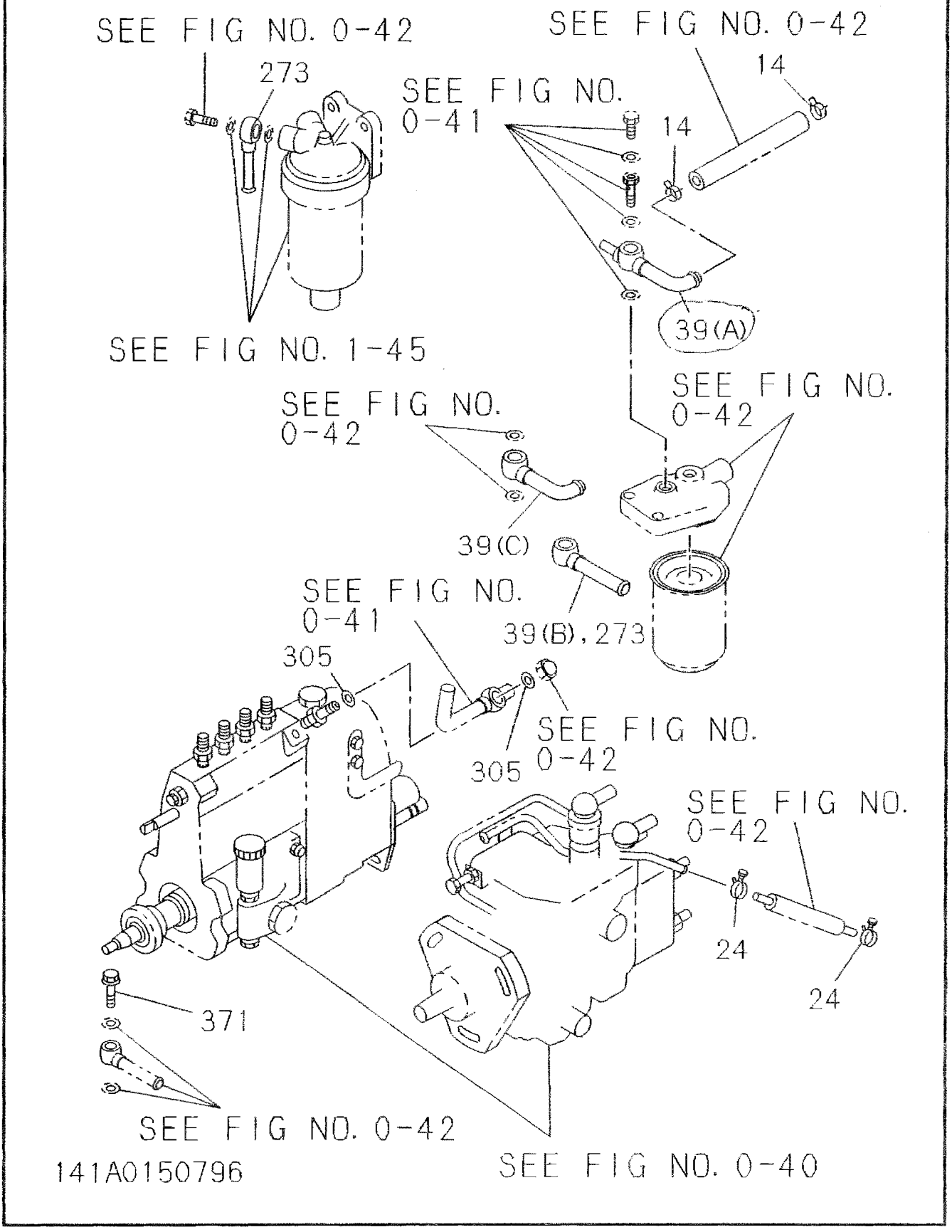

FUEL PIPING; CHASSIS

1-41 A

FIG-NO.

4JB1 model codes (header): PA01, PA02, PA03, PA04, PA05, PA06, PA08, PA09, PA12, PA13, PA13UG, PA14, PA15, PA16, PA17, PA18, PA19, PA20, PA21, PA22, PB, PB02, PB03, PD, PD01, PF, PH, PK, PK01, PK02, PK03, PK04, PKL, PLL01, PL, PLUG, PL01, PL01UG, PL02, PL02UF, PN, PN01, PN01UG

Column letters: ABCDE FGHIJ KLMNO PQRST UVWXY ZABCD EFGHI JKLMN OPQRS TUVWX

KEY NO	PART NAME / PART NUMBER	ITC	APPLIED DATE	LR	QTY	Applicable models	Remarks
14	CLIP; HOSE						
	109707-0111		9503-		2	ABCDE FGHIJ KLMNO PQRST U ZABC KLMN OP	
39	PIPE; FUEL						
(A)	894441-5921		9503-		1	AB DE FGHIJ KL NO PQRS U ZA KLMNOP	
(A)	894455-6731		9503-		1	C M T BC	
(B)	515411-2231		9503-		1	WX	
(C)	894327-5631		9503-		1	WX	
273	PIPE; FUEL, SEDIMENTER						
	515411-2231		9503-		2	H	
305	GASKET; FUEL PIPE						
	909572-0140		9503-		2	ABCDE FGHIJ KLMNO PQRST U ZABC KLMN OP	ID=14.2
371	BOLT; JOINT						
	109675-0860		9503-		2	H	M14X27

1-41 B FUEL PIPING; CHASSIS

FIG-NO.

KEY. NO	PART NAME / PART NUMBER	ITC	APPLIED DATE	LR	QTY	4JB1					A-4JB1					Remarks
						PPPPP	PPPPP	PPPPP	P PPT	TTT	PPPPP	PPPPP	PPPPP	PPPPP	P	
						YYYYY	VVVWW	WWWWW	W TTP	PPP	AAAAA	AAAAA	AAAAA	AAYYY	Y	
						0000	00 0	00000	0 00B	KKX	AAAAA	AAAAA	AAAAA	AWAAA	A	
						1234	12 2	34678	9 0	0	0000	00000	11111	10 00	0	
									1	1	1234	56789	01234	51 12	3	
						ABCDE	FGHIJ	KLMNO	PQRST	UVWXY	ZABCD	EFGHI	JKLMN	OPQRS	TUVWX	
14	CLIP: HOSE															
	109707-0111		9503-		2	AB	FGHIJ	KLMNO	P		ZA CD	EFGHI	JKLMN	OP R	T	
24	CLIP: FUEL HOSE															
	109704-0181		9503-		2				RST							ID=15
39	PIPE: FUEL															
(A)	894455-6731		9503-		1	AB										
(A)	894441-5921		9503-		1		FGHIJ	KLMNO	P		ZA CD	EFGHI	JKLMN	OP R	T	
273	PIPE: FUEL, SEDIMENTER															
	515411-2231		9503-		2			N				I	N		T	
	515411-2231		9503-		2		J	MN			C	F				
305	GASKET: FUEL PIPE															
	909572-0140		9503-		2	ABCDE	FGHIJ	KLMNO	P		ZA					ID=14.2

MEMO

1-45	WATER SEDIMENTER; FUEL
FIG-NO.	

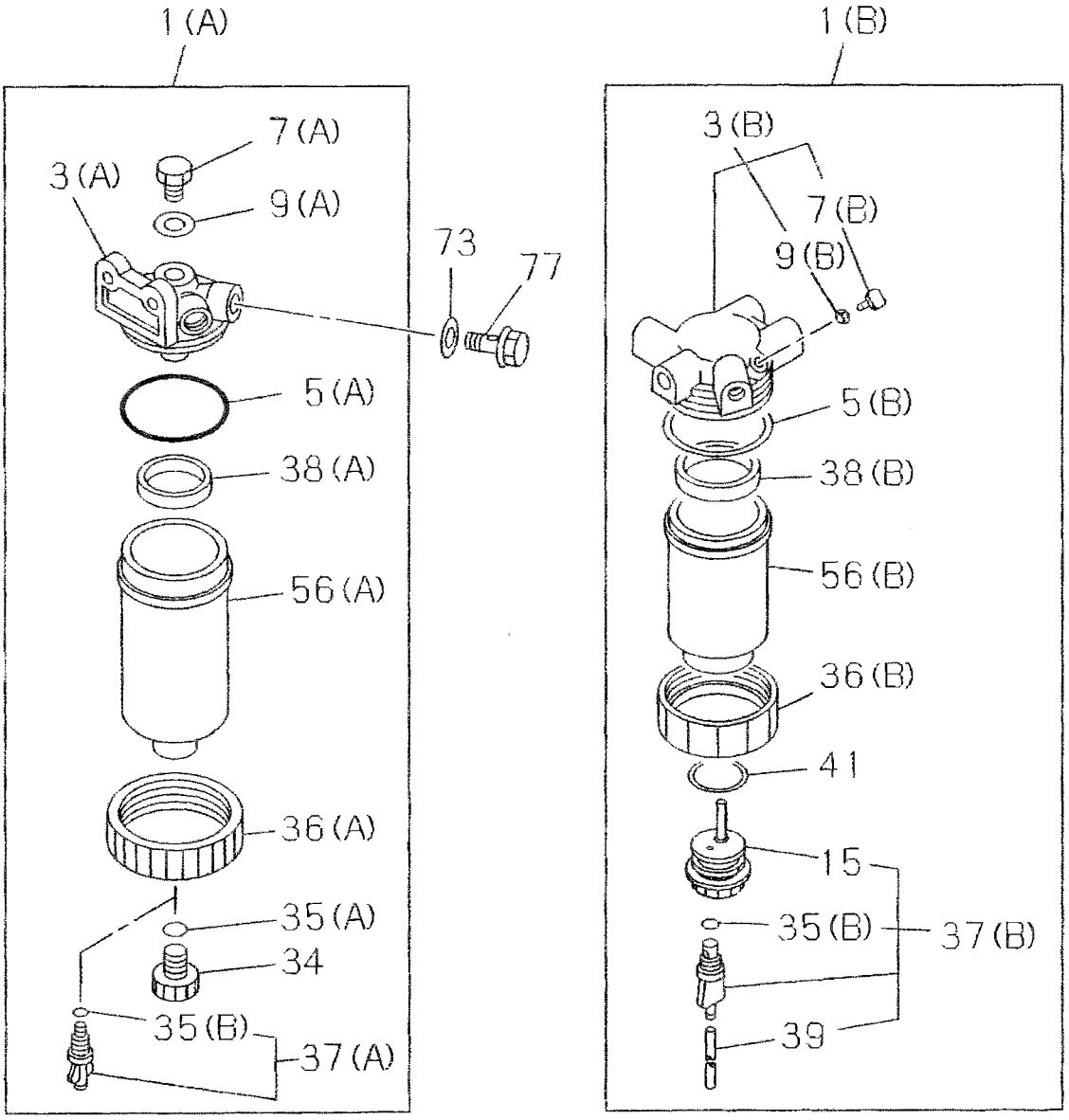

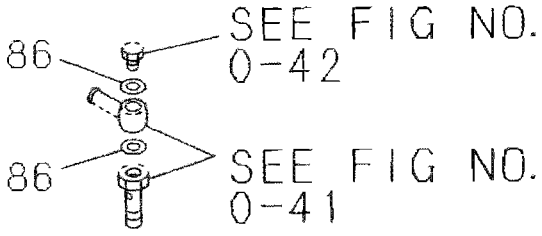

145A0150796

WATER SEDIMENTER; FUEL

FIG-NO. 1-45 A

Engine model: 4JB1

KEY NO	PART NAME / PART NUMBER	ITC	APPLIED DATE	LR	QTY	Model column mark	Remarks
1	SEDIMENTER; FUEL						
(A)	113200-8410		9503-		1	H	
(A)	897020-9410		9503-		1	Z	
3	BODY ASM; SEDIMENTER						
(A)	513212-0591		9503-		1	H, Z	
5	GASKET; UPR COVER, SEDIMENTER						
(A)	509623-0700		9503-		1	H, Z	
7	PLUG; DRAIN, SEDIMENTER						
(A)	513219-0200		9503-		1	H, Z	
9	GASKET; DRAIN PLUG & CONNECTOR						
(A)	509630-0240		9503-		1	H, Z	
34	PLUG; DRAIN, FUEL FILTER						
	509680-0140		9503-		1	Z	
	894453-7460		9503-		1	H	
35	GASKET; DRAIN PLU						
(A)	509623-0690		9503-		1	Z	
(A)	894416-3770		9503-		1	H	
36	RING; BODY TO CASE						
(A)	513619-0221		9503-		1	H, Z	
38	FLOAT; SEDIMENTER						
(A)	513219-0210		9503-		1	H, Z	
56	CASE; FUEL SEDIMENTER						
(A)	113211-2110		9503-		1	H	
(A)	513211-0231		9503-		1	Z	
86	GASKET; JOINT BOLT						
	109630-0850		9503-		4	H	ID=14.2 OD=19.2

1-45 B WATER SEDIMENTER; FUEL

FIG-NO.

KEY NO	PART NAME / PART NUMBER	ITC	APPLIED DATE	LR	QTY	4JB1	A-4JB1	Remarks
1	SEDIMENTER: FUEL							
(A)	113200-8410		9503-		1		C F I N T	
(B)	513200-2291		9503-		1	J MN		
3	BODY ASM: SEDIMENTER							
(A)	513212-0591		9503-		1		C I N T	
(B)	513212-0780		9503-		1	J MN		
5	GASKET: UPR COVER, SEDIMENTER							
(A)	509623-0700		9503-		1		C F I N T	
(A)	894416-3770		9503-		1		I N T	
(B)	509623-0750		9503-		1	J MN		
7	PLUG: DRAIN, SEDIMENTER							
(A)	894453-7460		9503-		1		C F I N T	
(A)	513219-0200		9503-		1		C F I N T	
(B)	909612-0210		9503-		1	J MN	I N T	
9	GASKET: DRAIN PLUG & CONNECTOR							
(A)	509630-0240		9503-		1		C F I N T	
(B)	909571-4060		9503-		1	J MN		
15	SENSOR ASM: SEDIMENTER							
	513244-0010		9503-		1	J MN		
35	GASKET: DRAIN PLUG							
(B)	894416-3770		9503-		1	J MN	C F	
36	RING: BODY TO CASE							
(A)	513619-0221		9503-		1		C F I N T	
(B)	513234-0010		9503-		1	J MN		
37	PLUG: SENSOR							
(A)	894453-7460		9503-		1		C F I N T	
(B)	513220-0030		9503-		1	J MN		
38	FLOAT: SEDIMENTER							
(A)	513219-0210		9503-		1		C F I N T	
(B)	513258-0010		9503-		1	J MN		
39	HOSE: SEDIMENTER							
	894242-1170		9503-		1	J MN		
41	GASKET: SENSOR TO CASE							
	909563-3340		9503-		1	J MN		
56	CASE: FUEL SEDIMENTER							
(A)	113211-2110		9503-		1		C F I N T	
(B)	513211-0301		9503-		1	J MN		
73	GASKET: EYE JOINT							
	109630-0850		9503-		4		C F I N	ID=14.2 OD=19.2
77	JOINT: EYE, FUEL SEDIMENTER							
	109675-0860		9503-		2		C F N	M14X27

MEMO

1-50	EXHAUST PIPE AND SILENCER
FIG-NO.	

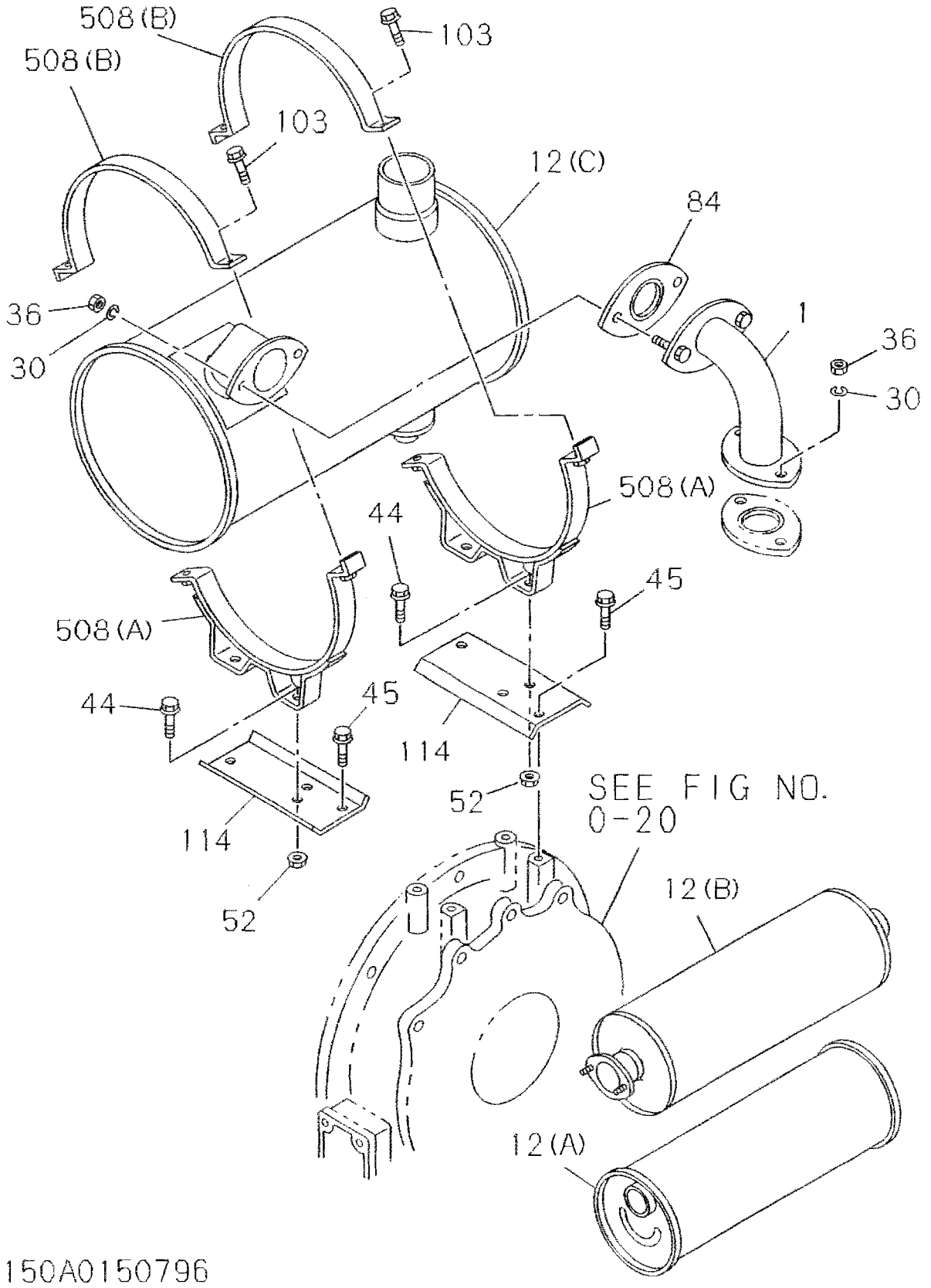

EXHAUST PIPE AND SILENCER

1-50 A
FIG-NO.

KEY. NO	PART NAME / PART NUMBER	ITC	APPLIED DATE	LR	QTY	4JB1 PPPPP AAAAA 0000 1234 ABCDE	PPPPP AAAAA 00001 56892 FGHIJ	PPPPP AAAAA 11111 33456 U G KLMNO	PPPPP AAAAA 11122 78901 PQRST	PPPP ABBB 2 00 2 23 UVWXY	PPPPP DDFHK 0 1 ZABCD	PPPPP KKKKK 0000L 1234 EFGHI	PPPPP KLLLL L U00 0 G11 1 U G JKLMN	PPPPP LLNNN 00 00 22 11 U U F G OPQRS	TUVWX	Remarks
12	SILENCER ASM; EXH															
(A)	522140-0051		9503-		1				Q							
(A)	522140-0152		9503-		1					U			KL			

1-50 B EXHAUST PIPE AND SILENCER

FIG-NO.

KEY NO / PART NAME

Model applicability columns:
- 4JB1: PPPPPPPPPPPPPPPPPP PPTTTT / YYYYYVVVVWWWWWWWWW TTPPPP / 0000 00 0000000 QQBKKX / 1234 12 2346789 0 0 / 1 1 — ABCDEFGHIJKLMNOPQRSTUVWXY
- A-4JB1: PPPPPPPPPPPPPPPPPPPPPP / AAAAAAAAAAAAAAAAAAYYYY / AAAAAAAAAAAAAAAAAWAAAA / 0000000001111110 000 / 1234567890123451 123 — ZABCDEFGHIJKLMNOPQRSTUVWX

KEY NO	PART NAME / PART NUMBER	ITC	APPLIED DATE	LR	QTY	4JB1	A-4JB1	Remarks
1	PIPE: EXH							
	897176-1000		9503-		1		B	
12	SILENCER ASM: EXH							
(A)	522140-0152		9805-		1		O	
(B)	894249-2933		9503-		1	G H		
(C)	897176-0991		9503-		1		B	
30	WASHER: LK.PIPE CLAMP							
	909150-6100		9503-		2		B	ID=10
	909150-6080		9503-		2		B	ID=8
36	NUT: EXH PIPE							
	909110-5080		9503-		2		B	M8
	909110-5100		9503-		2		B	M10
44	BOLT: BRKT							
	028081-0200		9503-		4		B	M10X20 FLANGE
45	BOLT: BRKT							
	028781-0250		9503-		4		B	M10X25 FLANGE
52	NUT: BRKT							
	091150-2100		9503-		4		B	M10 FLANGE
84	GASKET: EXH PIPE							
	897093-5740		9503-		1		B	ID=55
103	BOLT: SILENCER BRKT FIX							
	028680-8250		9503-		4		B	M8X25 FLANGE
114	BRACKET: EXH SILENCER							
	897176-1010		9503-		2		B	
508	BAND: EXHAUST SILENCER							
(A)	897176-1910		9503-		2		B	
(B)	897176-1920		9503-		2		B	

2

2-01	CLUTCH
FIG-NO.	

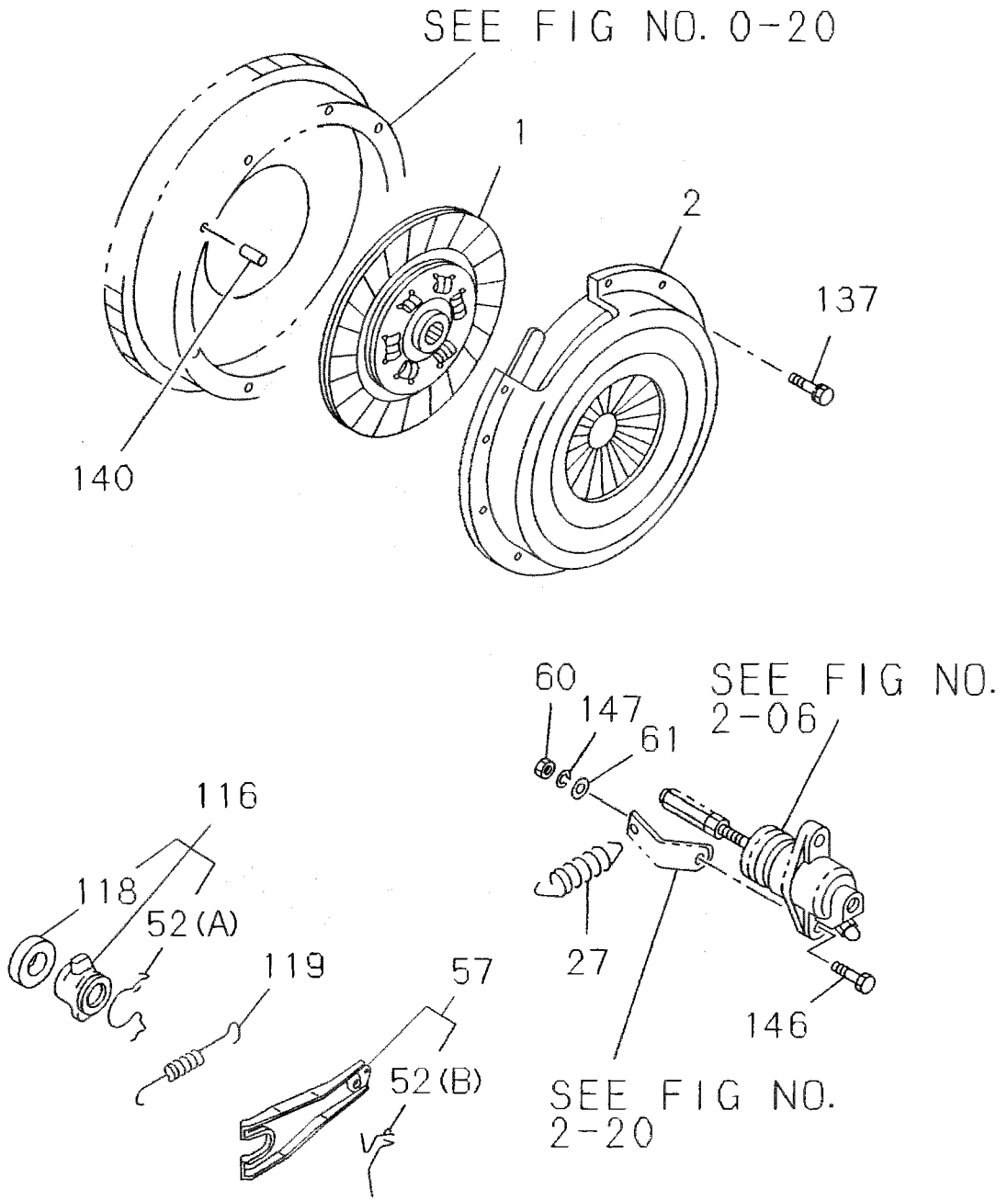

201A0150796

CLUTCH

2–01 A

FIG-NO.

Model: 4JB1

KEY NO	PART NAME / PART NUMBER	ITC	APPLIED DATE	LR	QTY	L (PA13UG)	L (PLUG)	N (PL01UG)	P (PL02UF)	S (PN01UG)	Remarks
1	DISC: CLUTCH										
	897013-5480		9503-		1	L		N		S	9.5″
	897010-9500		9503-		1		L				
	897042-6820		9503-		1				P		
2	PLATE ASM: PRESSURE, CLU										
	894259-1321		9503-		1	L		N		S	
	531220-0021		9503-		1		L				
	531220-0170		9503-		1				P		
27	SPRING: RETURN, SHIFT FORK										
	894459-9240		9503-		1	L					
	509583-0401		9503-		1		L				
	909942-3201		9503-		1			N		S	
52	SPRING: SHIFT BLOCK TO FORK										
(A)	894460-8930		9503-		1	L	L	N		S	
(B)	531349-0040		9503-		1		L				
57	FORK: SHIFT, CLU										
	897024-5280		9503-		1	L		N		S	
	531240-0050		9503-		1		L				
60	NUT: SLAVE CYL										
	909110-4080		9503-		2		L	N		S	M8
61	WASHER: PL, SLAVE CYL, CLU										
	909160-5080		9503-		2		L				ID=8
116	BLOCK: SHIFT, CLU										
	894313-1670		9503-		1	L		N		S	
	894389-3670		9503-		1		L				
118	BEARING: CLU RELEASE										
	531314-0011		9503-		1	L		N		S	
	894389-4160		9503-		1		L				
119	SPRING: SHIFT FORK										
	894459-9240		9503-		1	L					
137	BOLT: CLU COVER										
	894321-8401	A	9503-9611		6	L	L	N		S	M8X18 W/LK WASHER
	028080-8160		9612-		6	L	L	N		S	M8X16 FLANGE
	050040-8180		9503-		6				P		M8X18 W/LK WASHER
140	PIN: STRAIGHT										
	909878-5320		9503-		2	L		N	P	S	OD=6 L=24
	908151-0250		9503-		3		L				
146	BOLT: SLAVE CYL TO TRANS CASE										
	050040-8300		9503-		2	L					M8X30 W/LK WASHER
	010805-8400		9503-		2		L	N		S	M8X40
147	WASHER: LK, SLAVE CYL TO TRANS CASE										
	909150-5080		9503-		2		L	N		S	ID=8

2-01 B CLUTCH

FIG-NO.

KEY NO	PART NAME	PART NUMBER	ITC	APPLIED DATE	LR	QTY	4JB1	A-4JB1	Remarks
							PPPPPPPPPPPPPPPPPPTTTT YYYYYVVVWWWWWWWWTTPPP 0000 00 0000000 00BKKX 1234 12 2346789 0 0 1 1 ABCDEFGHIJKLMNOPQRSTUVWXY	PPPPPPPPPPPPPPPPPPPPP AAAAAAAAAAAAAAAAAYYY AAAAAAAAAAAAAAAAWAAA 0000000001111110 000 1234567890123451 123 ZABCDEFGHIJKLMNOPQRSTUVWX	
1	DISC: CLUTCH								
	897207-2450			9805-		1		K	
2	PLATE ASM: PRESSURE, CLU								
	897109-2460			9805-		1		K	
137	BOLT: CLU COVER								
	028080-8160			9805-		1		K	

MEMO

2-05	CLUTCH PIPING
FIG-NO.	

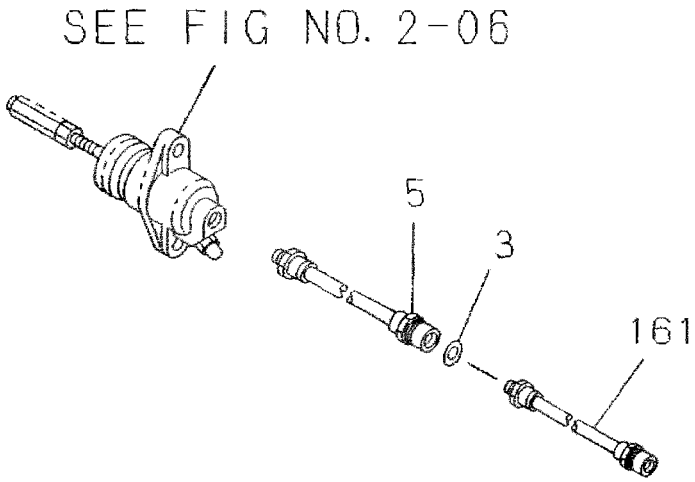

205A0150796

CLUTCH PIPING

2-05 A

FIG-NO.

4JB1

KEY NO	PART NAME	PART NUMBER	ITC	APPLIED DATE	LR	QTY	PA	PA01	PA02	PA03	PA04	PA05	PA06	PA08	PA09	PA12	PA13	PA13UG	PA14	PA15	PA16	PA17	PA18	PA19	PA20	PA21	PA22	PB	PB02	PB03		PD	PD01	PF	PH	PK	PK01	PK02	PK03	PK04	PKL	PKL01	PL	PLUG	PL01	PL01UG	PL02	PL02UF	PN	PN01	PN01UG						Remarks
							A	B	C	D	E	F	G	H	I	J	K	L	M	N	O	P	Q	R	S	T	U	V	W	X	Y	Z	A	B	C	D	E	F	G	H	I	J	K	L	M	N	O	P	Q	R	S	T	U	V	W	X	
3	GASKET; FLEX HOSE, CLU	909920-8731		9503-		1																																						L		N					S						
5	HOSE; FLEX, CLU PIPE	509364-0963		9503-		1																																						L		N					S						L=292
161	HOSE; FLEX, SLAVE CYL	894108-3602		9503-		1												L																																							

2-06	CLUTCH SLAVE CYLINDER
FIG-NO.	

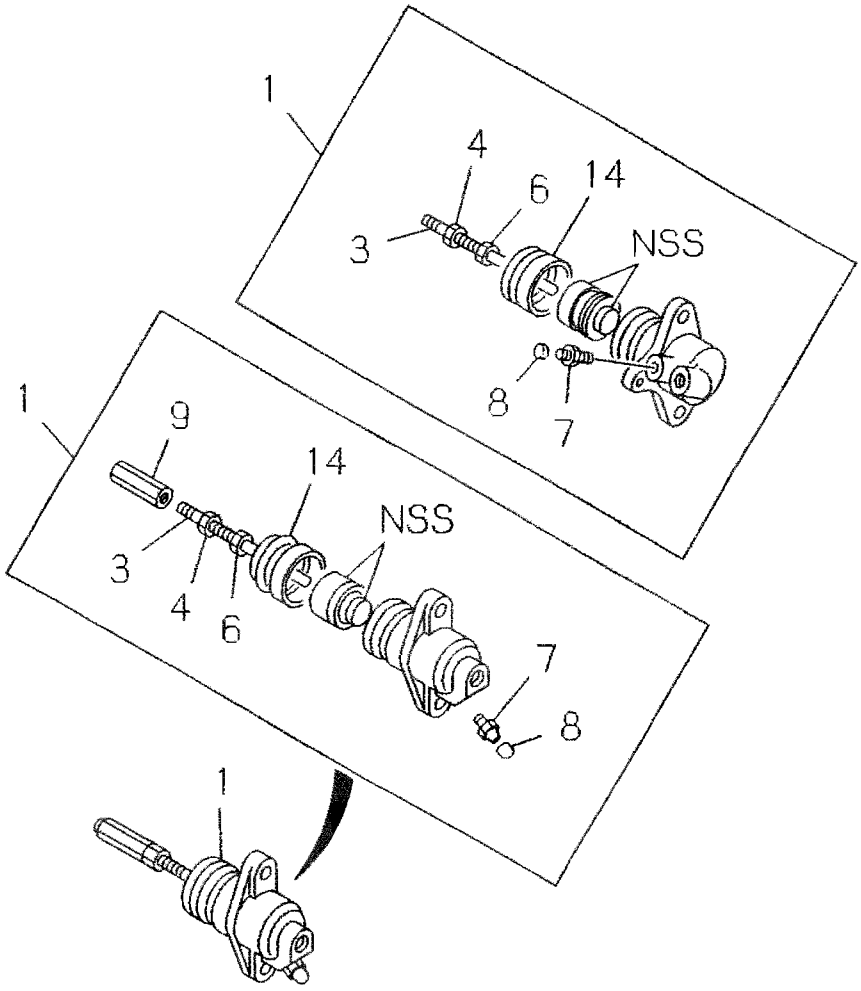

206A0150796

CLUTCH SLAVE CYLINDER

2-06 A
FIG-NO.

KEY NO	PART NAME / PART NUMBER	ITC	APPLIED DATE	LR	QTY	4JB1 PPPPP AAAAA 0000 1234 ABCDE	PPPPP AAAAA 00001 56892 FGHIJ	PPPPP AAAAA 11111 33456 U G KLMNO	PPPPP AAAAA 11122 78901 PQRST	PPPP ABBB 2 00 2 23 UVWXY	PPPPP DDFHK 0 1 ZABCD	PPPPP KKKKK 0000L 1234 EFGHI	PPPPP KLLLL L U00 0 G11 1 U G JKLMN	PPPPP LLNNN 00 00 22 11 U U F G OPQRS	TUVWX	Remarks
1	CYLINDER; SLAVE, CLU															
	894319-3041		9503-		1								L			
	547570-0201		9503-		1								N	S		
	897024-2931		9503-		1			L								
3	ROD; PUSH, SLAVE CYL															
	894459-6980		9503-		1			L								
	983461-7060		9503-		1								L			
	983461-3020		9503-		1								N	S		
4	NUT; ADJ, SLAVE CYL PUSH ROD															
	909644-0050		9503-		1			L					L			
6	NUT; LK, ROD END															
	909111-4080		9503-		1			L					L			M8
	909111-4080		9503-		2								N	S		M8
7	SCREW; BLEEDER, SLAVE CYL															
	894115-1130		9503-		1			L								M8X10
	947615-0081		9503-		1								L N	S		
8	CAP; BLEEDER, SLAVE CYL															
	947619-0050		9503-		1			L					L N	S		OD=9.5
9	ROD END; PUSH ROD															
	931349-0100		9503-		1								N	S		
14	BOOT; SLAVE CYL															
	894457-8590		9503-		1			L								
	509332-0120		9503-		1								L N	S		

2-20	MANUAL TRANSMISSION ASM AND CASE
FIG-NO.	(NO.1)

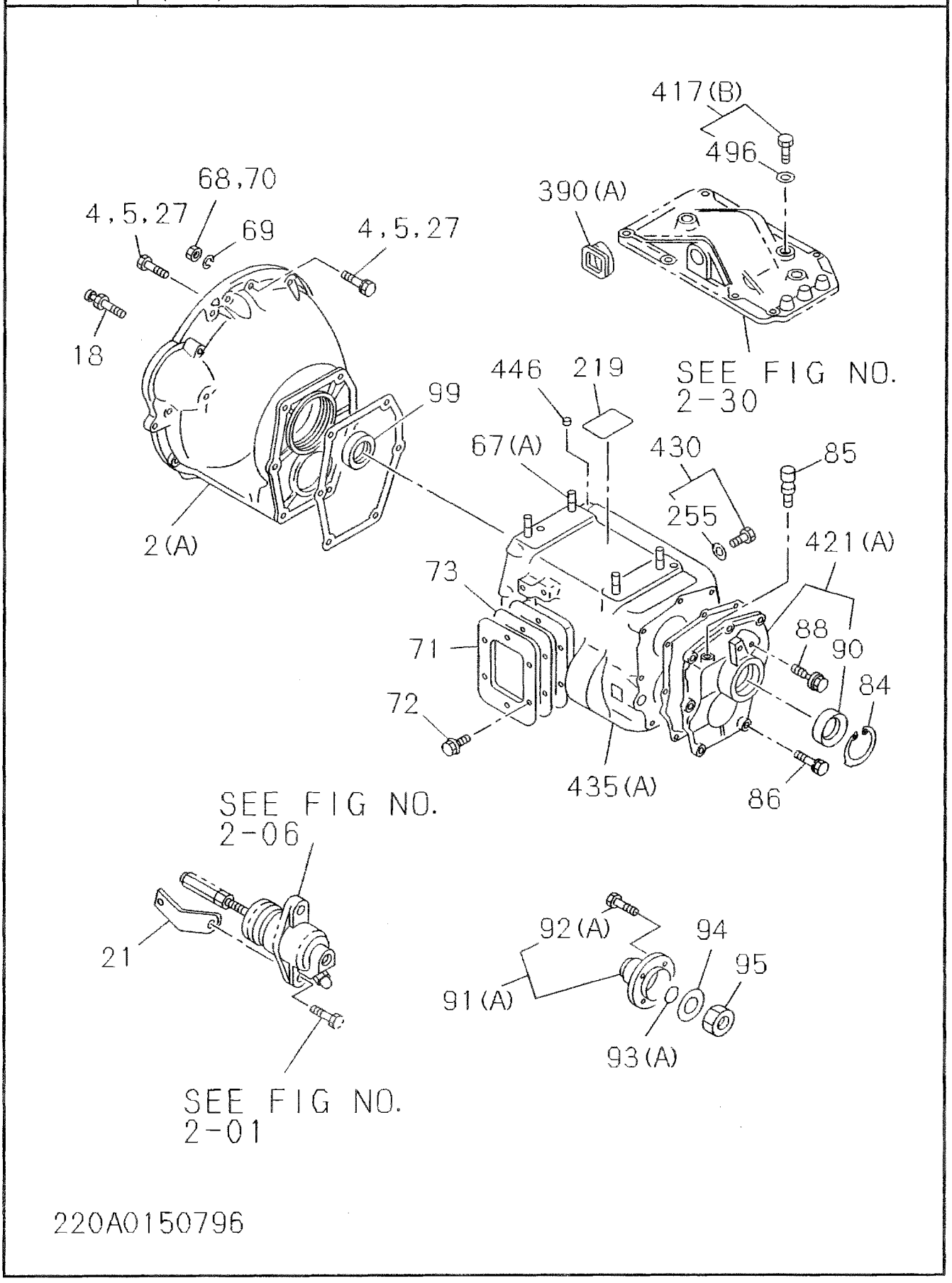

220A0150796

MANUAL TRANSMISSION ASM AND CASE

(NO.2)

2-20

FIG-NO.

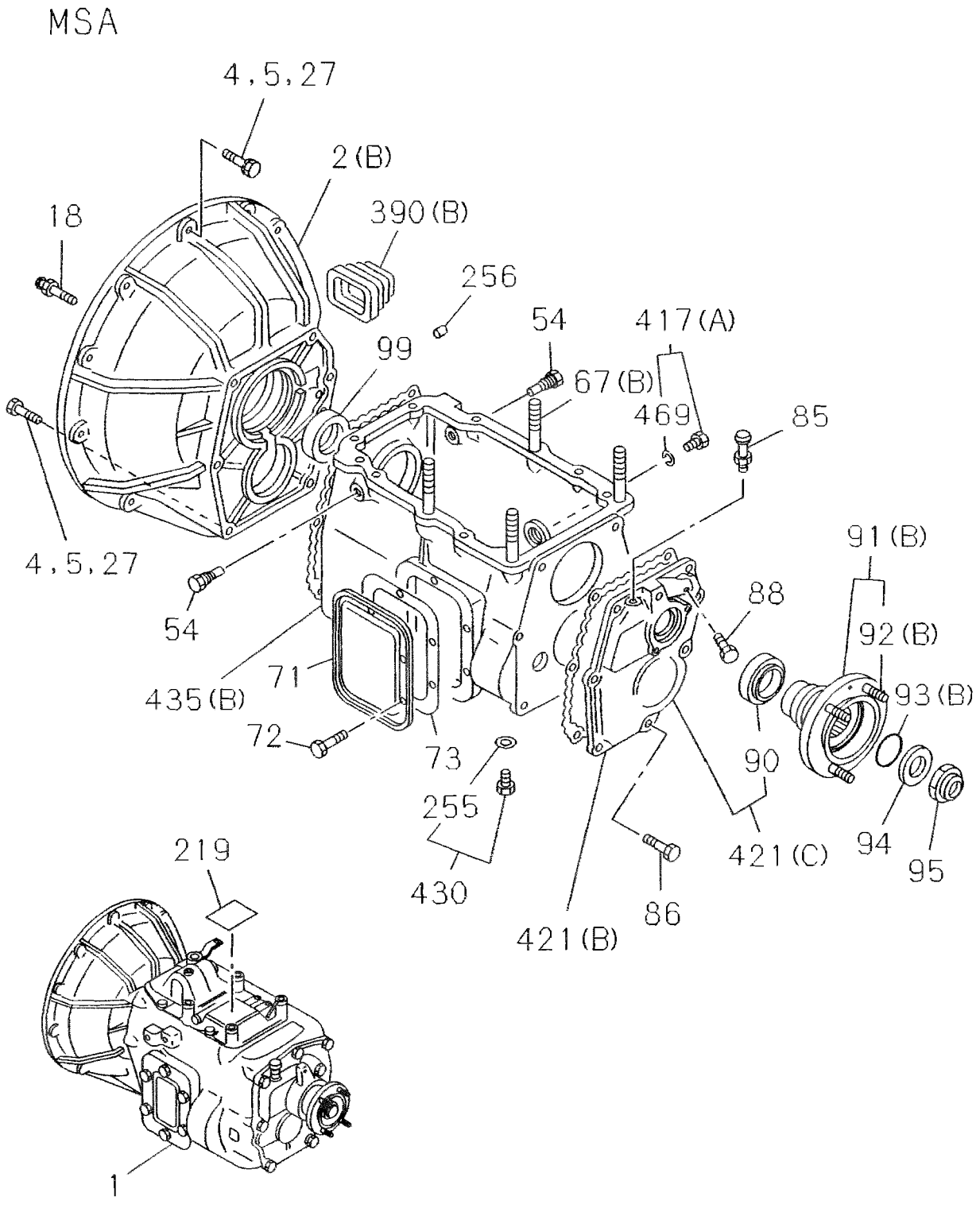

220A0250796

2-20 A MANUAL TRANSMISSION ASM AND CASE

FIG-NO.

4JB1

KEY NO	PART NAME / PART NUMBER	ITC	APPLIED DATE	LR	QTY	L	L	N	S	Remarks
1	TRANSMISSION ASM; MANUAL									
	897030-8643		9503-		1	L				
	897011-1333		9503-		1		L			
	897030-8504		9503-		1			N	S	
2	HOUSING; CLU									
(A)	897100-4890		9503-		1	L		N	S	
(B)	894310-4560		9503-		1		L			
4	BOLT; FLYWHEEL HSG									
	050141-0400		9503-		3	L			S	M10X40 W/WASHER
	050141-2400		9503-		3	L	L		S	M12X40
	050151-0350		9503-		11		L			M10X35 W/LK WASHER
5	BOLT; REAR PLATE									
	050141-2350		9503-		2	L	L	N	S	M12X35 W/WASHER
	050141-0350		9503-		1	L		N	S	M10X35 W/WASHER
18	SUPPORT; WITH DRAW LEVER									
	531345-0021		9503-		1	L	L	N	S	L=47.5
21	BRACKET; RETURN SPR									
	531349-0011		9503-		1		L			
	931349-0130		9503-		1			N	S	
27	BOLT; COVER TO CLU HSG									
	894249-2460		9503-		6		L			
54	BOLT; FULCRUM									
	894459-9701		9503-		2		L			
67	STUD; CASE TRANS									
(A)	909631-0040		9503-		4	L	L	N	S	
(B)	509302-0110		9503-		4		L			
68	NUT; REAR PLATE									
	909110-4100		9503-		1	L		N	S	M10
	999110-4120		9503-		2	L		N	S	M12
69	WASHER; LK, REAMER BOLT									
	909150-5100		9503-		1	L		N	S	ID=10.2
70	NUT; REAMER BOLT									
	909110-4100		9503-		1	L		N	S	M10
71	COVER; SIDE, TRANS CASE									
	933141-6012		9503-		1	L	L	N	S	
72	BOLT; SIDE COVER									
	894128-7910		9503-		6	L	L	N	S	
73	GASKET; SIDE COVER TO TRANS CASE									
	933142-6010		9503-		1	L	L	N	S	

MANUAL TRANSMISSION ASM AND CASE

4JB1

KEY NO	PART NAME / PART NUMBER	ITC	APPLIED DATE	LR	QTY	L	L	N	S	Remarks
84	SPACER: COVER, TRANS									
	894452-9720		9403-9403		1	L		N	S	
	897112-9950		9404-		1	L		N	S	
85	BREATHER: RR COVER									
	894368-9632		9503-		1	L	L	N	S	
86	BOLT: RR COVER									
	894128-7860		9503-		7	L		N	S	M8X25
	894482-3380		9503-		6		L			M10X30 FLANGE
	894318-7820		9503-		1		L			M10X50
88	SCREW: SPEEDOMETER BUSHING									
	894128-7850		9503-		1		L	N	S	M8X12
90	SEAL: OIL, RR COVER									
	897036-1670		9503-		1	L	L	N	S	KOYO
	897074-6510		9503-		1	L	L	N	S	NOK
91	DRIVER: COUPLING									
(A)	897011-3460	A	9402-9402		1	L		N	S	
(A)	897011-3462		9403-		1	L		N	S	
(B)	897011-3440	A	9402-9402		1		L			
(B)	897011-3442		9403-		1		L			
92	BOLT: COUPLING DRIVER									
(A)	894146-4861	A	9402-9402		4	L		N	S	M10X33
(A)	897109-6961		9403-		4	L		N	S	
(B)	894476-7290	A	9402-9402		4		L			M12X41
(B)	897109-6971		9403-		4		L			
93	GASKET: COUPLING DRIVER									
(A)	894421-5760		9503-		1	L		N	S	
(B)	894178-7250		9503-		1		L			
94	WASHER: COUPLING DRIVER									
	894249-2400		9503-		1	L	L	N	S	
95	NUT: MAINSHAFT									
	897087-7500		9503-		1	L	L	N	S	M24 FLANGE
99	SEAL: OIL, FRT COVER									
	894326-4410		9503-		1	L	L	N	S	NOK
219	PLATE: TRANS CASE & QUAD BOX									
	897084-0510		9503-		1	L				
	894340-2342		9503-		1		L			
	897076-9090		9503-		1			N	S	
255	GASKET: DRAIN PLUG									
	894336-5110		9503-		1	L	L	N	S	ID=15.3
256	PIN: KNOCK									
	908161-0160		9503-		2		L			

2-20 A MANUAL TRANSMISSION ASM AND CASE

FIG-NO.

4JB1

KEY NO	PART NAME / PART NUMBER	ITC	APPLIED DATE	LR	QTY	A PA	B PA01	C PA02	D PA03	E PA04	F PA05	G PA06	H PA08	I PA09	J PA12	K PA13	L PA13UG	M PA14	N PA15	O PA16	P PA17	Q PA18	R PA19	S PA20	T PA21	U PA22	V PB	W PB02	X PB03	Y	Z PD	A PD01	B PF	C PH	D PK	E PK01	F PK02	G PK03	H PK04	I PKL	J PKL01	K PL	L PLUG	M PL01	N PL01UG	O PL02	P PL02UF	Q PN	R PN01	S PN01UG	T	U	V	W	X	Remarks
390	COVER; DUST,CLU SHIFT																																																							
(A)	897034-8800		9503-		1												L																												N					S						
(B)	897105-8540		9503-		1																																						L													
417	PLUG; OIL FILLER,TRANS																																																							
(A)	894340-7171		9503-		1																																						L													
(B)	894340-7171		9503-		1												L																										L		N					S						
421	COVER; RR,TRANS																																																							
(A)	897036-1500		9403-9403		1												L																												N					S						
(A)	897112-9861		9404-		1												L																												N					S						
(B)	897048-7440		9503-		1																																						L													
(C)	897093-3640		9503-		1																																						L													
430	PLUG; OIL DRAIN																																																							
	894340-7181		9503-		1												L																										L		N					S						
435	CASE; TRANS																																																							
(A)	897072-0040		9503-		1												L																												N					S						
(B)	894318-7033		9503-		1																																						L													
446	PLUG; CASE,TRANS																																																							
	909201-3160		9503-		1												L																												N					S						
469	PUMP; OIL																																																							
	894336-5110		9503-		1																																						L													ID=15.3
496	GASKET; OIL FILTER																																																							
	894336-5110		9503-		1												L																										L		N					S						ID=15.3

MEMO

2-25	SPEEDOMETER DRIVEN GEAR
FIG-NO.	

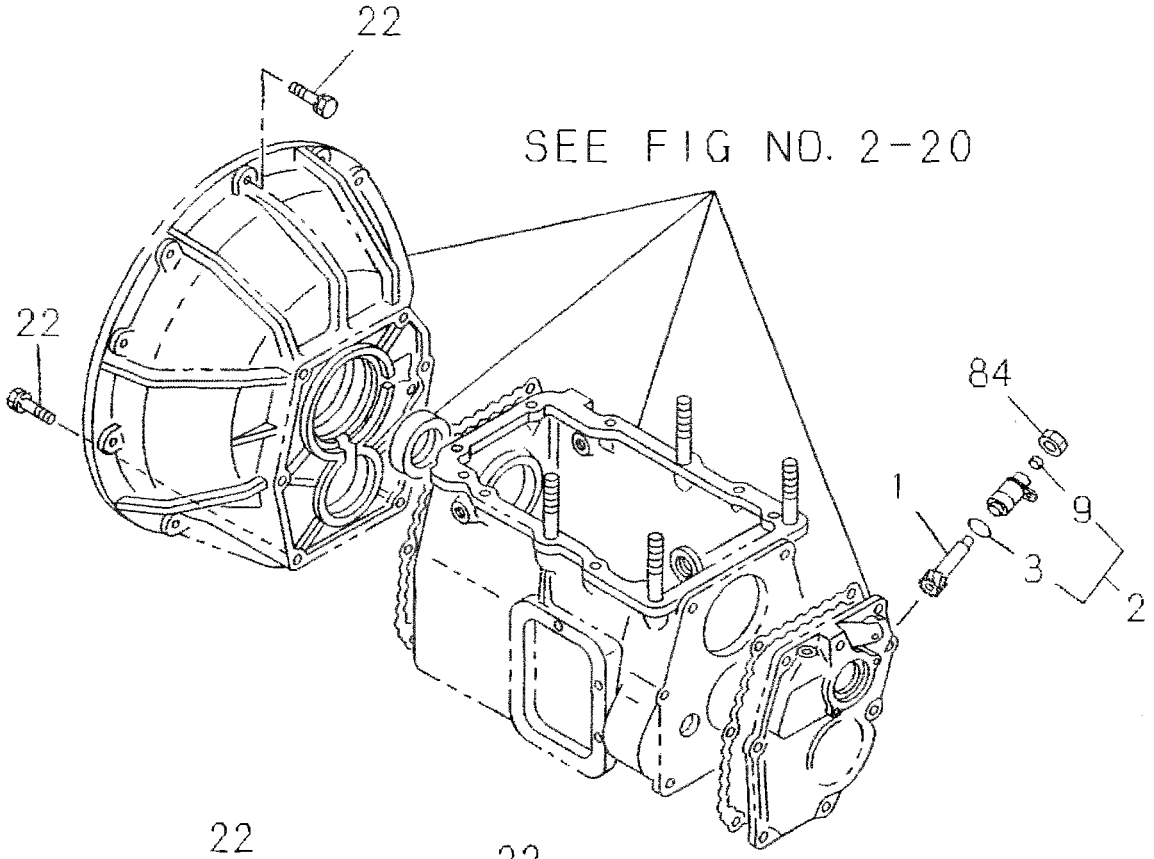

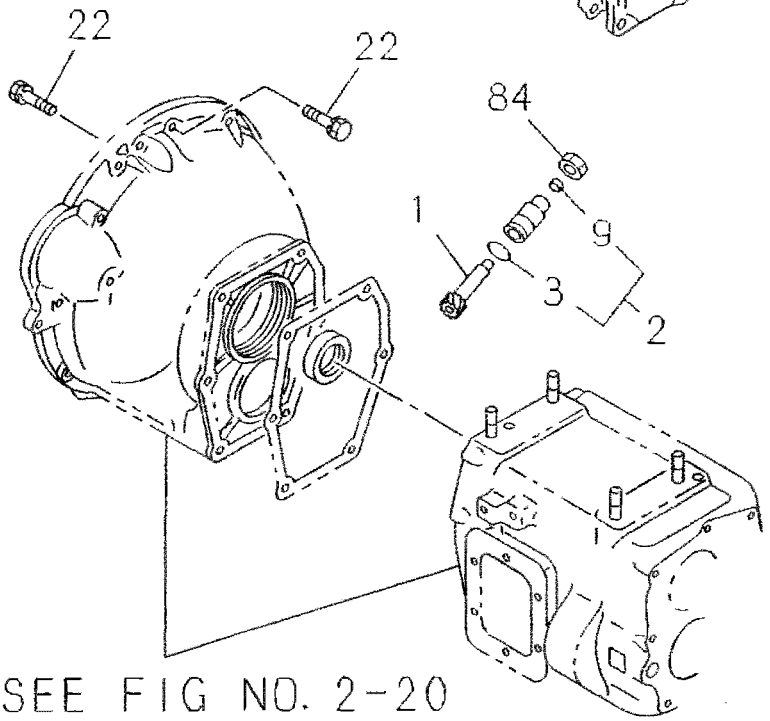

225A0150796

SPEEDOMETER DRIVEN GEAR

2-25 A
FIG-NO.

4JB1

KEY NO	PART NAME / PART NUMBER	ITC	APPLIED DATE	LR	QTY	ABCDE (PA, PA01, PA02, PA03, PA04)	FGHIJ (PA05, PA06, PA08, PA09, PA12)	KLMNO (PA13, PA13UG, PA14, PA15, PA16)	PQRST (PA17, PA18, PA19, PA20, PA21)	UVWXY (PA22, PB, PB02, PB03)	ZABCD (PD, PD01, PF, PH, PK)	EFGHI (PK01, PK02, PK03, PK04, PKL)	JKLMN (PKL01, PL, PLUG, PL01, PL01UG)	OPQRS (PL02, PL02UF, PN, PN01, PN01UG)	TUVWX	Remarks
1	GEAR: DRIVEN, SPD															
	894249-0640		9503-		1			L					L N	S		Z=16
2	BUSHING: DRIVEN GEAR, SPEEDOMETER															
	897080-3621		9503-		1			L					L N	S		Z=16 MARK "6"
3	GASKET: BUSHING															
	909920-8520		9503-		1			L					L N	S		
9	SEAL: OIL, DRIVEN GEAR															
	897080-5070		9503-		1			L					L N	S		
22	BOLT: TRANS CASE TO ENG															
	050141-2400		9503-		2			L					N	S		M12X40
84	CAP: BUSH, SPEEDOMETER GEAR															
	919319-0130		9503-		1			L					L N	S		

2-26	MANUAL TRANSMISSION GEAR
FIG-NO.	(NO.1)

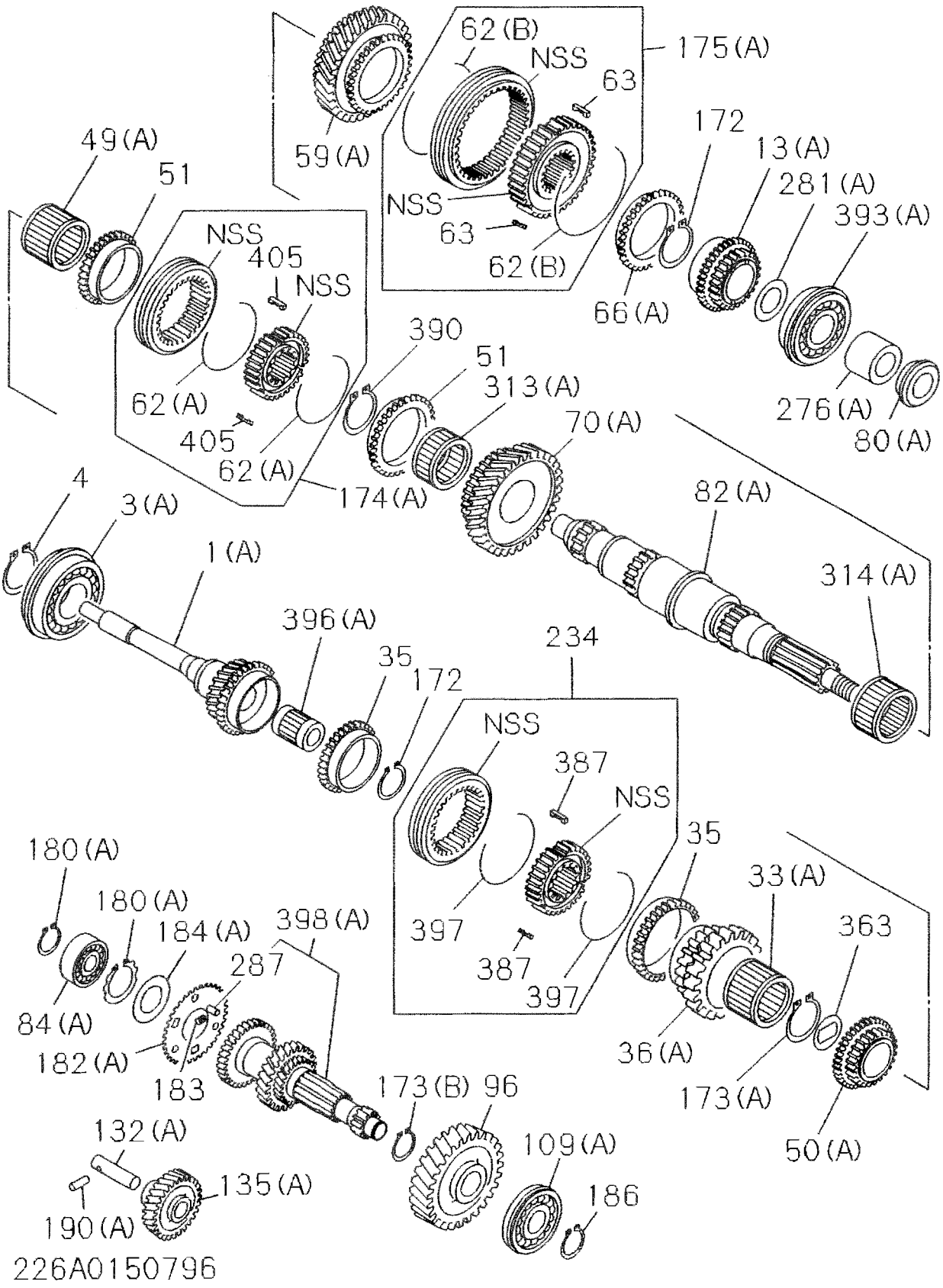

MANUAL TRANSMISSION GEAR

(NO.2)

2-26

FIG-NO.

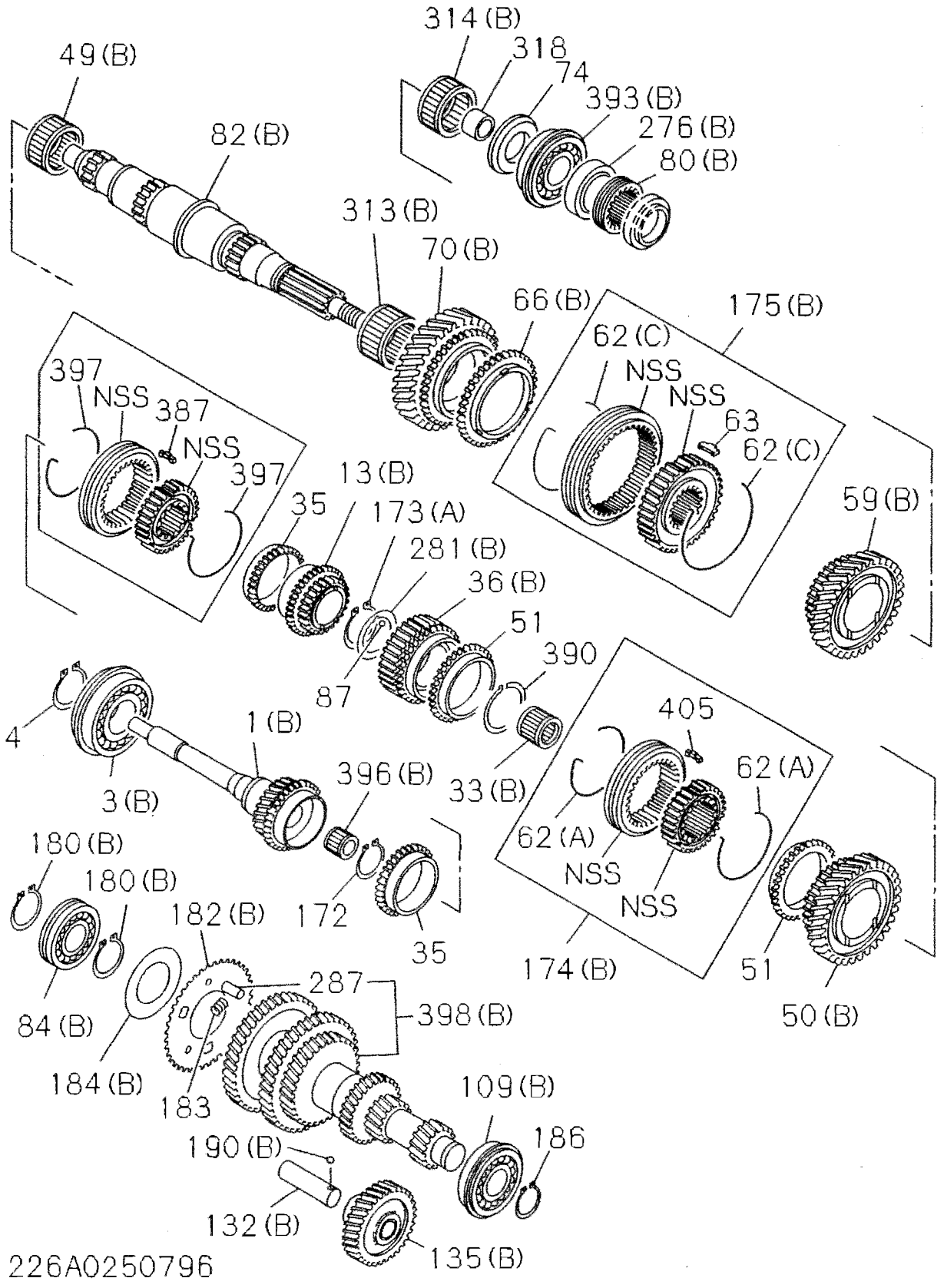

2-26 A MANUAL TRANSMISSION GEAR

FIG-NO.

4JB1

KEY NO	PART NUMBER	ITC	APPLIED DATE	LR	QTY	PA (A)	PA01 (B)	PA02 (C)	PA03 (D)	PA04 (E)	PA05 (F)	PA06 (G)	PA08 (H)	PA09 (I)	PA12 (J)	PA13 (K)	PA13UG (L)	PA14 (M)	PA15 (N)	PA16 (O)	PA17 (P)	PA18 (Q)	PA19 (R)	PA20 (S)	PA21 (T)	PA22 (U)	PB (V)	PB02 (W)	PB03 (X)	(Y)	PD (Z)	PD01 (A)	PF (B)	PH (C)	PK (D)	PK01 (E)	PK02 (F)	PK03 (G)	PK04 (H)	PKL (I)	PKL01 (J)	PL (K)	PLUG (L)	PL01 (M)	PL01UG (N)	PL02 (O)	PL02UF (P)	PN (Q)	PN01 (R)	PN01UG (S)	(T)	(U)	(V)	(W)	(X)	Remarks
1	SHAFT; TOP GEAR, TRANS																																																							
(A)	897091-5581		9503-		1												L																																							
(A)	897103-6320		9503-		1																																								N					S						Z=30
(B)	894447-2720		9503-		1																																						L													
3	BEARING; TOP GEAR SHAFT																																																							
(A)	894178-7321		9503-		1												L																												N					S						NSK
(A)	894462-6150		9503-		1												L																												N					S						KOYO
(B)	894178-7310		9503-		1																																						L													
4	RING; SNAP, BRG TO TOP GEAR SHAFT																																																							
	909180-0400		9503-		1												L																												N					S						ID=37
	509589-0090		9503-		1																																						L													ID=41.5
13	GEAR; 5TH, MAINSHAFT																																																							
(A)	894316-7762		9503-		1												L																																							Z=24
(A)	897077-3391		9503-		1																																								N					S						Z=25
(B)	894316-7041		9503-		1																																						L													Z=21
33	BEARING; NEEDLE, 3RD GEAR																																																							
(A)	894317-1580		9503-		1												L																												N					S						KOYO
(B)	894340-6710		9503-		1																																						L													NTN
(B)	894388-9110		9503-		1																																						L													KOYO
35	RING; BLOCK, 4TH & 3RD																																																							
	894123-7752		9503-		2												L																										L		N					S						
36	GEAR; 3RD, MAINSHAFT																																																							
(A)	894316-7602		9503-		1												L																																							Z=31
(A)	894316-7612		9503-		1																																								N					S						Z=33
(B)	894316-6902		9503-		1																																						L													Z=35
49	BEARING; NEEDLE, 2ND GEAR																																																							
(A)	509811-0140		9503-		1												L																												N					S						NSK
(A)	509811-0150		9503-		1												L																												N					S						NTN
(B)	900096-6360		9503-		1																																						L													
(B)	900096-6370		9503-		1																																						L													
(B)	900096-6380		9503-		1																																						L													
50	GEAR; 2ND, MAINSHAFT																																																							
(A)	894316-7643		9503-		1												L																																							Z=34
(A)	897014-0342		9503-		1																																								N					S						Z=36
(B)	894172-5632		9503-		1																																						L													Z=35
51	RING; BLOCK, LOW & 2ND																																																							
	897074-6191		9503-		2												L																										L		N					S						
59	GEAR; REV MAINSHAFT																																																							
(A)	897115-7770		9503-		1												L																												N					S						
(B)	894317-1462		9503-		1																																						L													Z=40
62	SPRING; INSERT, REV & 5TH																																																							
(A)	897023-7080		9503-		2												L																										L		N					S						

MANUAL TRANSMISSION GEAR

FIG-NO. 2-26 A

KEY. NO	PART NAME / PART NUMBER	ITC	APPLIED DATE	LR	QTY	4JB1 ABCDE (PA, PA01, PA02, PA03, PA04)	FGHIJ (PA05, PA06, PA08, PA09, PA12)	KLMNO (PA13, PA13UG, PA14, PA15, PA16)	PQRST (PA17, PA18, PA19, PA20, PA21)	UVWXY (PA22, PB, PB02, PB03, –)	ZABCD (PD, PD01, PF, PH, PK)	EFGHI (PK01, PK02, PK03, PK04, PKL)	JKLMN (PKL01, PL, PLUG, PL01, PL01UG)	OPQRS (PL02, PL02UF, PN, PN01, PN01UG)	TUVWX	Remarks
62	SPRING; INSERT, REV & 5TH															
(B)	897023-7100		9503-		2			L					N	S		
(C)	897023-7090		9503-		2								L			
63	INSERT; SYN, REV & 5TH															
	933263-6130		9503-		3			L					L N	S		
66	RING; BLOCK, SYN															
(A)	894128-7752		9503-		1			L					N	S		
(B)	897061-7520		9503-		1								L			
70	GEAR; 1ST, MAINSHAFT															
(A)	897014-0333		9503-		1			L					N	S		Z=43
(B)	897084-3781		9503-		1								L			Z=43
74	WASHER; THRUST, REV GEAR															
	933271-6061		9503-		1								L			
80	GEAR; SPD DRIVE															
(A)	897011-3500		9503-		1			L					N	S		Z=4
(B)	897011-3480		9503-		1								L			Z=4
82	SHAFT; MAIN, TRANS															
(A)	897045-9321		9503-		1			L					N	S		
(B)	897045-9311		9503-		1								L			
84	BEARING; COUNTER SHAFT, FRT															
(A)	509800-0621		9503-		1			L					N	S		NSK
(A)	894462-6170		9503-		1			L					N	S		KOYO
(B)	894455-8300		9503-		1								L			
87	BALL; THRUST WASHER															
	894340-5060		9503-		1								L			
96	GEAR; COUNTER DRIVE															
	894316-7861		9503-		1			L								Z=55
	897077-3411		9503-		1								N	S		Z=53
109	BEARING; COUNTER SHAFT, RR															
(A)	509800-0632		9503-		1			L					N	S		NSK
(A)	894462-6160		9503-		1			L					N	S		KOYO
(B)	894178-7340		9503-		1								L			
132	SHAFT; REV															
(A)	933351-6041		9503-		1			L					N	S		
(B)	894415-1621		9503-		1								L			
135	GEAR; REV IDLER															
(A)	897081-5393		9503-		1			L					N	S		Z=29
(B)	533361-0422		9503-		1								L			Z=27
172	RING; SNAP, CLU HUB															
	894402-4050		9503-		1			L					L N	S		T=1. 75

2-26 A MANUAL TRANSMISSION GEAR

FIG-NO.

KEY NO	PART NAME / PART NUMBER	ITC	APPLIED DATE	LR	QTY	4JB1 PA (A)	PA01 (B)	PA02 (C)	PA03 (D)	PA04 (E)	PA05 (F)	PA06 (G)	PA08 (H)	PA09 (I)	PA12 (J)	PA13 (K)	PA13UG (L)	PA14 (M)	PA15 (N)	PA16 (O)	PA17 (P)	PA18 (Q)	PA19 (R)	PA20 (S)	PA21 (T)	PA22 (U)	PB (V)	PB02 (W)	PB03 (X)	(Y)	PD (Z)	PD01 (A)	PF (B)	PH (C)	PK (D)	PK01 (E)	PK02 (F)	PK03 (G)	PK04 (H)	PKL (I)	PKL01 (J)	PL (K)	PLUG (L)	PL01 (M)	PL01UG (N)	PL02 (O)	PL02UF (P)	PN (Q)	PN01 (R)	PN01UG (S)	(T)	(U)	(V)	(W)	(X)	Remarks
172	RING: SNAP, CLU HUB																																																							
	894402-4060		9503-		1												L																										L		N					S						T=1.80
	894402-4070		9503-		1												L																										L		N					S						T=1.85
	894402-4050		9503-		1												L																										L		N					S						T=1.75
	894402-4060		9503-		1												L																										L		N					S						T=1.80
	894402-4070		9503-		1												L																										L		N					S						T=1.85
173	RING: SNAP, OVERDRIVE GEAR																																																							
(A)	894151-5220		9503-		1												L																										L		N					S						T=1.85
(A)	894151-5230		9503-		1												L																										L		N					S						T=1.90
(A)	894151-5240		9503-		1												L																										L		N					S						T=1.95
(A)	894157-7470		9503-		1												L																										L		N					S						T=2.00
(B)	909180-0450		9503-		1												L																												N					S						
174	SYNCHRONIZER ASM: 2ND-3RD																																																							
(A)	897048-7480		9503-		1												L																												N					S						
(B)	897091-4320		9503-		1																																						L													
175	SYNCHRONIZER: LOW-REV																																																							
(A)	897048-7500		9503-		1												L																												N					S						
(B)	897091-4340		9503-		1																																						L													
180	RING: SNAP, CLUSTER GEAR																																																							
(A)	894146-4830		9503-		1												L																												N					S						ID=38.5
(B)	509589-0100		9503-		1																																						L													ID=44.5
(A)	909180-0350		9503-		1												L																												N					S						ID=32.2
(B)	909180-0320		9503-		1																																						L													ID=29.6
182	PLATE: CLUSTER GEAR																																																							
(A)	897095-9840		9503-		1												L																												N					S						
(B)	894131-9231		9503-		1																																						L													
183	SPRING: PLATE, CLUSTER GEAR																																																							
	894132-1680		9503-		3												L																												N					S						
	894148-1960		9503-		3																																						L													
184	SPRING: CLUSTER GEAR																																																							
(A)	894128-7901		9503-		1												L																												N					S						
(B)	894101-3200		9503-		1																																						L													
186	RING: SNAP, CLUSTER GEAR																																																							
	909180-0320		9503-		1												L																												N					S						ID=29.6
	909180-0350		9503-		1																																						L													ID=32.2
190	BALL: LK, REV SHAFT																																																							
(A)	894128-7940		9503-		1												L																												N					S						
(B)	900097-5090		9503-		1																																						L													
234	SYNCHRONIZER ASM: 4TH TO 5TH																																																							
	897048-7452		9503-		1												L																												N					S						
276	SPACER: BRG TO DRIVE GEAR																																																							
(A)	933235-6061		9503-		1												L																												N					S						

MANUAL TRANSMISSION GEAR

FIG-NO. 2-26 A

4JB1

KEY NO	PART NAME / PART NUMBER	ITC	APPLIED DATE	LR	QTY	L (PA13UG)	L (PLUG)	N (PL01UG)	S (PN01UG)	Remarks
276	SPACER; BRG TO DRIVE GEAR									
(B)	933235-6022		9503-		1		L			
281	WASHER; THRUST, MAINSHAFT									
(A)	933271-6071		9503-		1	L		N	S	
(B)	894340-1941		9503-		1		L			
287	PIN; COUNTER GEAR									
	894402-4620		9503-		3	L	L	N	S	
313	BEARING; NEEDLE, LOW GEAR									
(A)	894317-1610		9503-		1	L		N	S	NSK
(A)	897010-5470		9503-		1	L		N	S	KOYO
(B)	900096-6360		9503-		1		L			
(B)	900096-6370		9503-		1		L			
(B)	900096-6380		9503-		1		L			
314	BEARING; NEEDLE, REV GEAR									
(A)	509811-0140		9503-		1	L		N	S	NSK
(A)	509811-0150		9503-		1	L		N	S	NTN
(B)	900096-6360		9503-		1		L			
(B)	900096-6380		9503-		1		L			
318	COLLAR; DIST, REV GEAR									
	933234-6181		9503-		1		L			
363	WASHER; THRUST, 3RD-4TH									
	533271-0070		9503-		1	L		N	S	
387	INSERT; SYN, 4TH & 3RD									
	533263-0010		9503-		3	L	L	N	S	
390	RING; SNAP, CLU HUB									
	894151-5200		9503-		1	L	L	N	S	T=1.75
	894151-5210		9503-		1	L	L	N	S	T=1.80
	894151-5220		9503-		1	L	L	N	S	T=1.85
393	BEARING; MAINSHAFT END									
(A)	509800-0632		9503-		1	L		N	S	NSK
(A)	897095-9130		9503-		1	L		N	S	KOYO
(B)	894178-7321		9503-		1		L			NSK
(B)	894462-6150		9503-		1		L			KOYO
396	BEARING; NEEDLE, MAINSHAFT									
(A)	900096-6021		9503-		1	L		N	S	NTN
(A)	900096-6060		9503-		1	L		N	S	NSK
(A)	900096-6350		9503-		1	L		N	S	KOYO
(B)	894178-7291		9503-		1		L			
397	SPRING; INSERT, 4TH & 3RD									
	897023-7100		9503-		2	L	L	N	S	
398	GEAR; COUNTER									
(A)	897030-8710		9503-		1	L				Z=51-34-22-14

2-26 A MANUAL TRANSMISSION GEAR

FIG-NO.

KEY NO — PART NAME

KEY NO	PART NAME / PART NUMBER	ITC	APPLIED DATE	LR	QTY	Remarks
398	GEAR; COUNTER					
(A)	897077-3370		9503-		1	
(B)	897017-8730		9503-		1	
405	INSERT; SYN, LOW & 2ND					
	533263-0010		9503-		3	

4JB1 (columns A–Y)

KEY NO	PART NUMBER	A PA	B PA01	C PA02	D PA03	E PA04	F PA05	G PA06	H PA08	I PA09	J PA12	K PA13	L PA13UG	M PA14	N PA15	O PA16	P PA17	Q PA18	R PA19	S PA20	T PA21	U PA22	V PB	W PB02	X PB03	Y
398 (A)	897077-3370																									
398 (B)	897017-8730																									
405	533263-0010												L													

4JB1 (columns Z–X)

KEY NO	PART NUMBER	Z PD	A PD01	B PF	C PH	D PK	E PK01	F PK02	G PK03	H PK04	I PKL	J PKL01	K PL	L PLUG	M PL01	N PL01UG	O PL02	P PL02UF	Q PN	R PN01	S PN01UG	T	U	V	W	X
398 (A)	897077-3370															N					S					
398 (B)	897017-8730													L												
405	533263-0010													L		N					S					

MEMO

2-30	GEAR SHIFTER AND QUADRANT BOX
FIG-NO.	(NO.1)

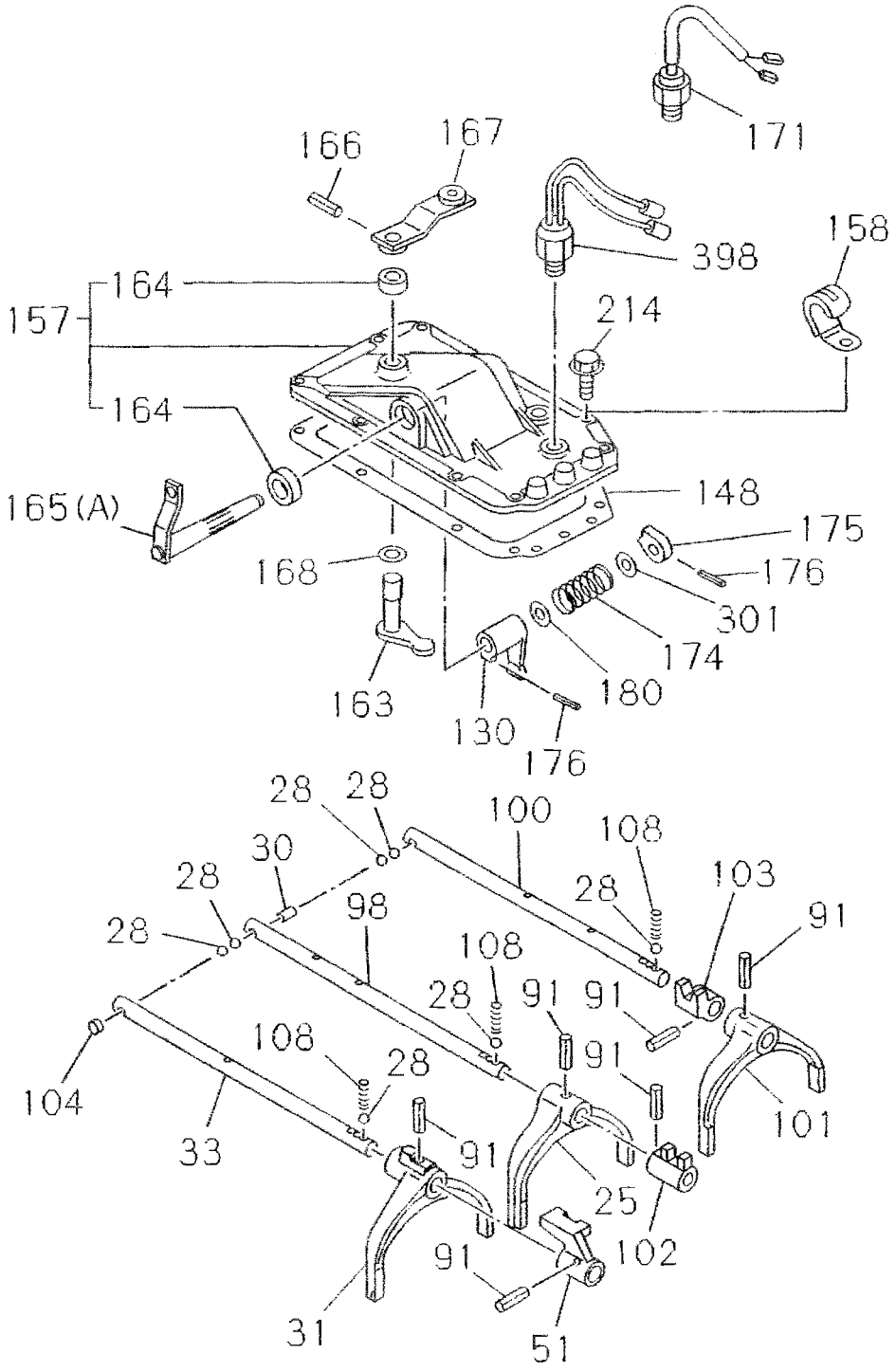

230A0150796

GEAR SHIFTER AND QUADRANT BOX

(NO.2)

2-30

FIG-NO.

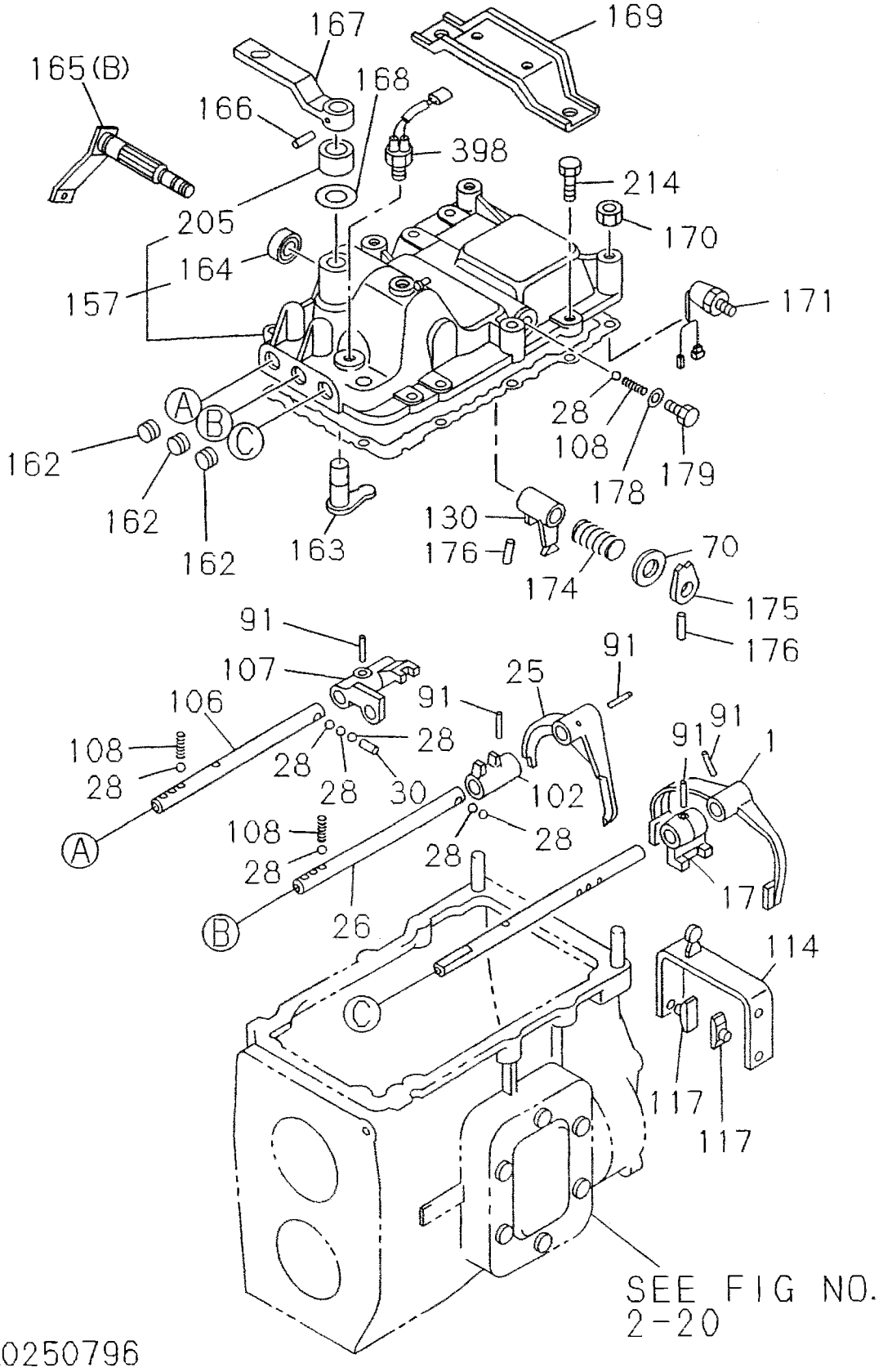

2-30 A GEAR SHIFTER AND QUADRANT BOX

FIG-NO.

4JB1

KEY NO	PART NAME	PART NUMBER	ITC	APPLIED DATE	LR	QTY	KLMNO	JKLMN	OPQRS	Remarks
1	ARM; SHIFT,1ST & REV	897011-3631		9503-		1		L		
2	ROD; SHIFT,1ST & REV	897078-2040		9503-		1		L		
17	BLOCK; SHIFT,1ST & REV	894135-7194		9503-		1		L		
25	ARM; SHIFT,2ND & 3RD	897011-3641		9503-		1		L		
26	ROD; SHIFT,2ND & 3RD	897078-2050		9503-		1		L		
28	BALL; INTER LK	900097-0100		9503-		7	L	N	S	
		900097-0100		9503-		8		L		
30	PIN; INTER LK	533534-0010		9503-		1	L	L N	S	
31	ARM; SHIFT,LOW & 2ND	897011-3651		9503-		1	L	N	S	
33	ROD; SHIFT,LOW & 2ND	897011-3701		9503-		1	L	N	S	
51	BLOCK; SHIFT,1ST & 2ND	897022-8372		9503-		1	L	N	S	
70	WASHER; PL,SHIFT LEVER	894461-3450		9503-		1		L		
91	PIN; SPR,SHIFT ARM	894135-7710		9503-		6	L	N	S	L=25
		894135-7710		9503-		3		L		L=25
		897011-5962		9503-		2		L		L=32
98	ROD; SHIFT,TOP & 3RD	897011-3711		9503-		1	L	N	S	
99	ARM; SHIFT,4TH & 3RD	897011-3661		9503-		1	L	N	S	
100	ROD; SHIFT,REV & 5TH	894316-9230		9503-		1	L	N	S	
101	ARM; SHIFT,REV & 5TH	897107-5450		9503-		1	L	N	S	
102	BLOCK; SHIFT,3RD & 4TH	897017-5731		9503-		1	L	L N	S	

GEAR SHIFTER AND QUADRANT BOX

2-30 A FIG-NO.

4JB1

KEY NO	PART NAME	PART NUMBER	ITC	APPLIED DATE	LR	QTY	A PA	B PA01	C PA02	D PA03	E PA04	F PA05	G PA06	H PA08	I PA09	J PA12	K PA13	L PA13UG	M PA14	N PA15	O PA16	P PA17	Q PA18	R PA19	S PA20	T PA21	U PA22	V PB	W PB02	X PB03	Y	Z PD	A PD01	B PF	C PH	D PK	E PK01	F PK02	G PK03	H PK04	I PKL	J PKL0I	K PL	L PLUG	M PL01	N PL01UG	O PL02	P PL02UE	Q PN	R PN01	S PN01UG	T	U	V	W	X	Remarks
103	BLOCK: SHIFT, REV TO OD	894135-7194		9503-		1												L																												N					S						
104	PLUG: PLATE	909201-3160		9503-		1												L																												N					S						
106	ROD: SHIFT, OD TO TOP	897078-2060		9503-		1																																						L													
107	BLOCK: SHIFT, OD TO TOP	894135-7182		9503-		1																																						L													
108	SPRING: LOCK BALL	909740-1140		9503-		3												L																										L		N					S						OD=6.8 L=31.6
114	ARM: SHIFT, OD TO TOP	894316-9941		9503-		1																																						L													
117	PIECE: SHIFT, OD TO TOP	894316-9960		9503-		2																																						L													
130	LEVER: SHIFT, INTERNAL	894105-1412		9503-		1												L																												N					S						
		894340-1312		9503-		1																																						L													
148	GASKET: QUAD BOX	894257-1620		9503-		1												L																												N					S						
157	BOX: QUAD, TRANS	894340-1450		9503-		1												L																																							
		894340-1460		9503-		1																																								N					S						
		897066-3330		9503-		1																																						L													
158	CLIP: HARNESS	509700-2750		9503-		1												L																												N					S						ID=8.5
162	COVER: SHIFT ROD, QUAD BOX	894101-3190		9503-		3																																						L													
163	LEVER: SELECT, INTERNAL	894159-2631		9503-		1												L																										L		N					S						
164	SEAL: OIL, QUAD BOX	894128-7840		9503-		2												L																												N					S						OD=27
		894462-0190		9503-		1																																						L													OD=32
165	LEVER: SHIFT	(A) 894128-7800		9503-		1												L																																							
		(A) 894128-7810		9503-		1																																								N					S						
		(B) 897025-6070		9503-		1																																						L													
166	PIN: SPR, SELECT LEVER	894135-7710		9503-		1												L																										L		N					S						L=25

2-30 A GEAR SHIFTER AND QUADRANT BOX

FIG-NO.

KEY NO	PART NAME / PART NUMBER	ITC	APPLIED DATE	LR	QTY	PA (A)	PA01 (B)	PA02 (C)	PA03 (D)	PA04 (E)	PA05 (F)	PA06 (G)	PA08 (H)	PA09 (I)	PA12 (J)	PA13 (K)	PA13UG (L)	PA14 (M)	PA15 (N)	PA16 (O)	PA17 (P)	PA18 (Q)	PA19 (R)	PA20 (S)	PA21 (T)	PA22 (U)	PB (V)	PB02 (W)	PB03 (X)	(Y)	PD (Z)	PD01 (A)	PF (B)	PH (C)	PK (D)	PK01 (E)	PK02 (F)	PK03 (G)	PK04 (H)	PKL (I)	PKL01 (J)	PL (K)	PLUG (L)	PL01 (M)	PL01UG (N)	PL02 (O)	PL02UF (P)	PN (Q)	PN01 (R)	PN01UG (S)	(T)	(U)	(V)	(W)	(X)	Remarks
167	LEVER: SELECT, EXTERNAL																																																							
	894159-2692		9503-		1												L																												N					S						
	894101-6852		9503-		1																																						L														
168	WASHER: LK, SELECT LEVER																																																							
	894249-2501		9503-		1												L																										L		N					S						
169	BRACKET: ENG MTG TO TRANS																																																							
	894112-8922		9503-		2																																						L														
170	NUT: CONT BOX																																																							
	894249-2420		9503-		4																																						L														M12
171	SWITCH: NEUTRAL																																																							
	897065-4171	A	9405-9405		1												L																										L														
	897113-4381		9406-		1												L																										L														
174	SPRING: REV																																																							
	894158-3850		9503-		1												L																												N					S						
	894462-0200		9503-		1																																						L														
175	RING: STOPPER, SHIFT LEVER																																																							
	894249-0482		9503-		1												L																										L														
176	PIN: SPR, STOPPER																																																							
	909678-5490		9503-		2												L																										L														
	909678-5490		9503-		1																																								N					S						
178	GASKET: PLUG																																																							
	909571-6120		9503-		1																																						L														
179	PLUG: LOCK BALL																																																							
	897031-6680		9503-		1																																						L														
180	WASHER: REV STOP SPRING																																																							
	894249-2440		9503-		1												L																												N					S						
205	SEAL: OIL, CONT BOX, SUB TRANS																																																							
	894128-7840		9503-		1																																						L														OD=27
214	BOLT: CONT BOX, SUB TRANS																																																							
	894128-7860		9503-		10												L																												N					S						M8X25
	894128-7860		9503-		5																																						L														M8X25
	894132-1640		9503-		2																																						L														M8X45
301	WASHER: PL, SHIFT ASSISTER																																																							
	894129-3530		9503-		1																																								N					S						
398	SWITCH: REV LAMP																																																							
	897137-6550		9503-		1												L																										L		N					S						

(Model columns under 4JB1.)

3

3-08	PARKING BRAKE
FIG-NO.	

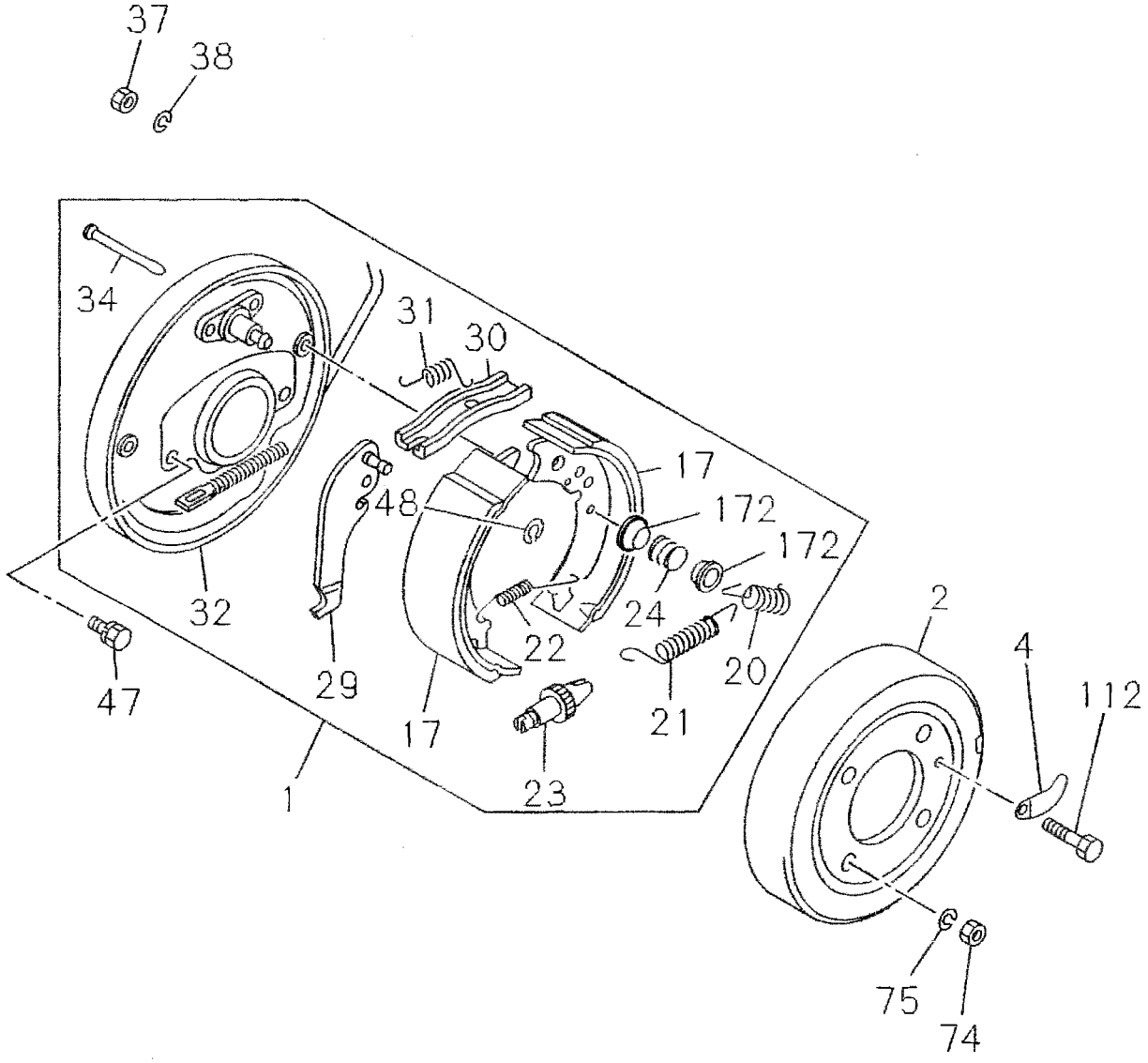

308A0150796

PARKING BRAKE

3-08 A

FIG-NO.

4JB1

```
PPPPPPPPPPPPPPPPPPPPPPPP  PPPPPPPPPPPPPPPPPPPPPPPPP
AAAAAAAAAAAAAAAAAAAAABBB  DDFHKKKKKKKLLLLLLNNN
 0000000011111111222 00    0    0000LL U0000 00
 1234568923345678901 2 23  1    1234 0 61122 11
              U                      1  U U  U
              G                         G F  G
ABCDEFGHIJKLMNOPQRSTUVWXYZABCDEFGHIJKLMNOPQRSTUVWX
```

KEY. NO	PART NAME / PART NUMBER	ITC	APPLIED DATE	LR	QTY	N	S	Remarks
1	BRAKE ASM; CENTER, PARKING 946200-6016		9503-		1	N	S	
2	DRUM; PARKING BRK 546210-0053		9503-		1	N	S	
4	COVER; ADJ HOLE 542319-0030		9503-		1	N	S	
17	SHOE; PARKING BRK 546220-0012		9503-		2	N	S	
20	SPRING; RETURN, SECONDARY, PARKING BRAKE 909942-5531		9503-		1	N	S	
21	SPRING; RETURN, PARKING BRAKE SHOE 909942-5521		9503-		1	N	S	
22	SCREW; ADJ, PARKING BRAKE SHOE 909942-3401		9503-		1	N	S	
23	SCREW; ADJ, PARKING BRAKE SHOE 547165-0250		9503-		1	N	S	
24	SPRING; BRK SHOE 909941-0621		9503-		2	N	S	
29	LEVER; PARKING BRAKE 894128-7650		9503-		1	N	S	
30	STRUT; PARKING BRAKE 546251-0070		9503-		1	N	S	
31	SPRING; SHOE TO STRUT 909942-5211		9503-		1	N	S	
32	PLATE; SUPPORT, PARKING BRK 946213-6012		9503-		1	N	S	
34	PIN; BRK SHOE 947162-0340		9503-		2	N	S	
37	NUT; SUPPORT PLATE 999110-5120		9503-		1	N	S	M12
38	WASHER; LK, SUPPORT PLATE 909150-5120		9503-		1	N	S	ID=12
47	BOLT; SUPPORT PLATE 050040-8140		9503-		2	N	S	M8X14 W/LK WASHER
48	RETAINER; PIN, PARKING BRAKE 946349-0051		9503-		1	N	S	

3-08 A PARKING BRAKE

FIG-NO.

KEY. NO	PART NAME / PART NUMBER	ITG	APPLIED DATE	LR	QTY	4JB1 ABCDEFGHIJKLMNOPQRSTUVWXYZABCDEFGHIJKLMNOPQRSTUVWX	Remarks
74	NUT; DRUM, PARKING BRAKE						
	909110-5100		9503-		4	N S	M10
75	WASHER; LK, DRUM, PARKING BRAKE						
	909150-6100		9503-		4	N S	ID=10
112	BOLT; COVER TO BRAKE DRUM						
	050040-6160		9503-		1	N S	M6X16 W/LK WASHER
172	CUP; SHOE HOLD						
	894378-4040		9503-		2	N S	

MEMO

3-11	PARKING BRAKE CONTROL
FIG-NO.	

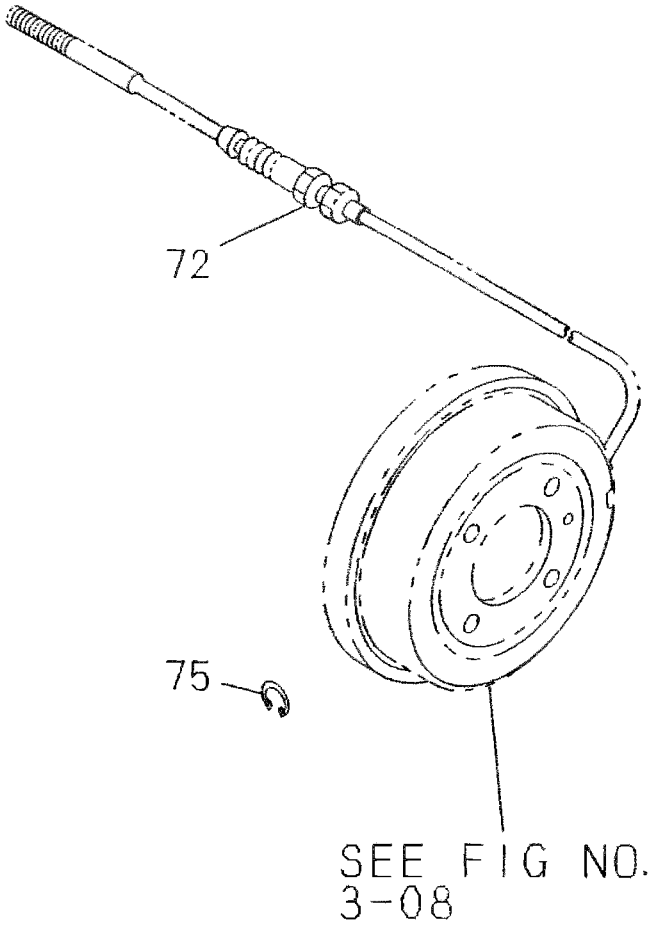

311A0150796

PARKING BRAKE CONTROL

3-11 A

FIG-NO.

4JB1

KEY. NO	PART NAME / PART NUMBER	ITC	APPLIED DATE	LR	QTY	A PA	B PA01	C PA02	D PA03	E PA04	F PA05	G PA06	H PA08	I PA09	J PA12	K PA13	L PA13UG	M PA14	N PA15	O PA16	P PA17	Q PA18	R PA19	S PA20	T PA21	U PA22	V PB	W PB02	X PB03	Y	Z PD	A PD01	B PF	C PH	D PK	E PK01	F PK02	G PK03	H PK04	I PL	J PKL01	K PL	L PLUG	M PL01	N PL01UG	O PL02	P PL02UF	Q PN	R PN01	S PN01UG	T	U	V	W	X	Remarks
72	CABLE; PARKING BRK																																																							
	546151-0734		9503-		1																																								N					S						
75	RING; SNAP, HAND BRAKE CABLE																																																							
	909185-4120		9503-		1																																								N					S						ID=12

MEMO

8

8-10	WIRING HARNESS AND FUSE
FIG-NO.	

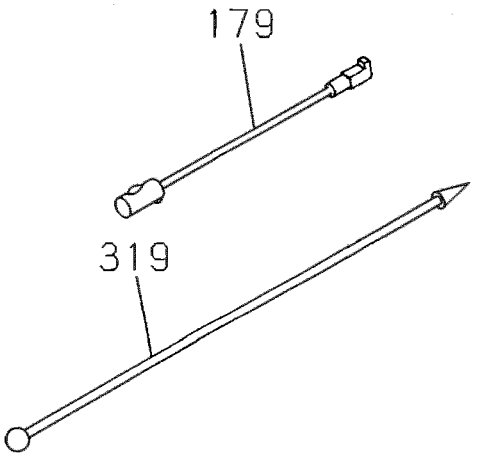

810A0150796

WIRING HARNESS AND FUSE

8-10 A

FIG-NO.

4JB1

KEY. NO	PART NAME	PART NUMBER	ITC	APPLIED DATE	LR	QTY	ABCDE	FGHIJ	KLMNO	PQRST	UVWXY	ZABCD	EFGHI	JKLMN	OPQRS	TUVWX	Remarks
							PA PA01 PA02 PA03 PA04	PA05 PA06 PA08 PA09 PA12	PA13 PA13UG PA14 PA15 PA16	PA17 PA18 PA19 PA20 PA21	PA22 PB PB02 PB03	PD PD01 PF PH PK	PK01 PK02 PK03 PK04 PKL	PKL01 PL PLUG PL01 PL01UG	PL02 PL02UF PN PN01 PN01UG		
179	FUSIBLE LINK																
		582659-0440		9503-		1		F		Q				J	QRS		
		582659-0440		9406-9406		1		G									
319	HARNESS; CABLE, OIL PRESSURE																
		582650-0930		9503-		1					V						

8-15	FIXING PARTS; WIRING HARNESS
FIG-NO.	

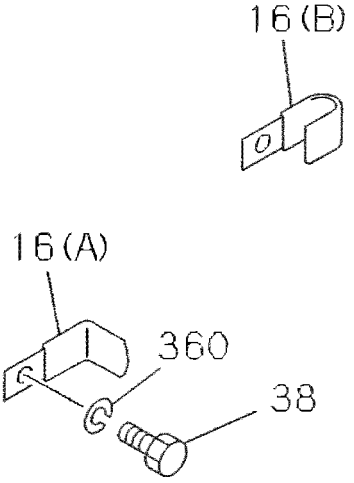

815A0150796

FIXING PARTS; WIRING HARNESS

8-15 A

FIG-NO.

KEY. NO	PART NAME / PART NUMBER	ITC	APPLIED DATE	LR	QTY	4JB1 ABCDE	FGHIJ	KLMNO	PQRST	UVWXY	ZABCD	EFGHI	JKLMN	OPQRS	TUVWX	Remarks
						PA PA01 PA02 PA03 PA04	PA05 PA06 PA08 PA09 PA12	PA13 PA13UG PA14 PA15 PA16	PA17 PA18 PA19 PA20 PA21	PA22 PB PB02 PB03	PD PD01 PF PH PK	PK01 PK02 PK03 PK04 PKL	PKL01 PL PLUG PL01 PL01UG	PL02 PL02UF PN PN01 PN01UG		
16	CLIP; HARNESS															
(A)	909916-7550		9503-		1					V W X						
(B)	109700-1600		9503-		1					W X						
38	BOLT; CLIP, HARNESS															
	020800-6100		9503-		1					V W X						M6X10
360	WASHER; LK, CLIP															
	909150-5060		9503-		1					V W X						ID=6

8-15 B FIXING PARTS; WIRING HARNESS

FIG-NO. 8-15 B

Model columns (4JB1):

Col	A	B	C	D	E	F	G	H	I	J	K	L	M	N	O	P	Q	R	S	T	U	V	W	X	Y
Model	PY	PY01	PY02	PY03	PY04	PV	PV01	PV02	PW	PW02	PW03	PW04	PW06	PW07	PW08	PW09		PTQ	PTQ01	TPB	TPK	TPK01	TPX		

Model columns (A-4JB1):

Col	Z	A	B	C	D	E	F	G	H	I	J	K	L	M	N	O	P	Q	R	S	T	U	V	W	X
Model	PAA	PAA01	PAA02	PAA03	PAA04	PAA05	PAA06	PAA07	PAA08	PAA09	PAA10	PAA11	PAA12	PAA13	PAA14	PAA15	PAW01	PYA	PYA01	PYA02	PYA03				

KEY NO	PART NAME / PART NUMBER	ITC	APPLIED DATE	L R	QTY	Applicable column (4JB1)	Remarks
16	CLIP: HARNESS						
	909916-7550		9503-		1	T	
	109700-1600		9503-		1	T	
38	BOLT: CLIP, HARNESS						
	020800-6100		9503-		1	T	M6X10
360	WASHER: LK, CLIP						
	909150-5060		9411-		1	T	ID=6

MEMO

8-21	METER ASM
FIG-NO.	

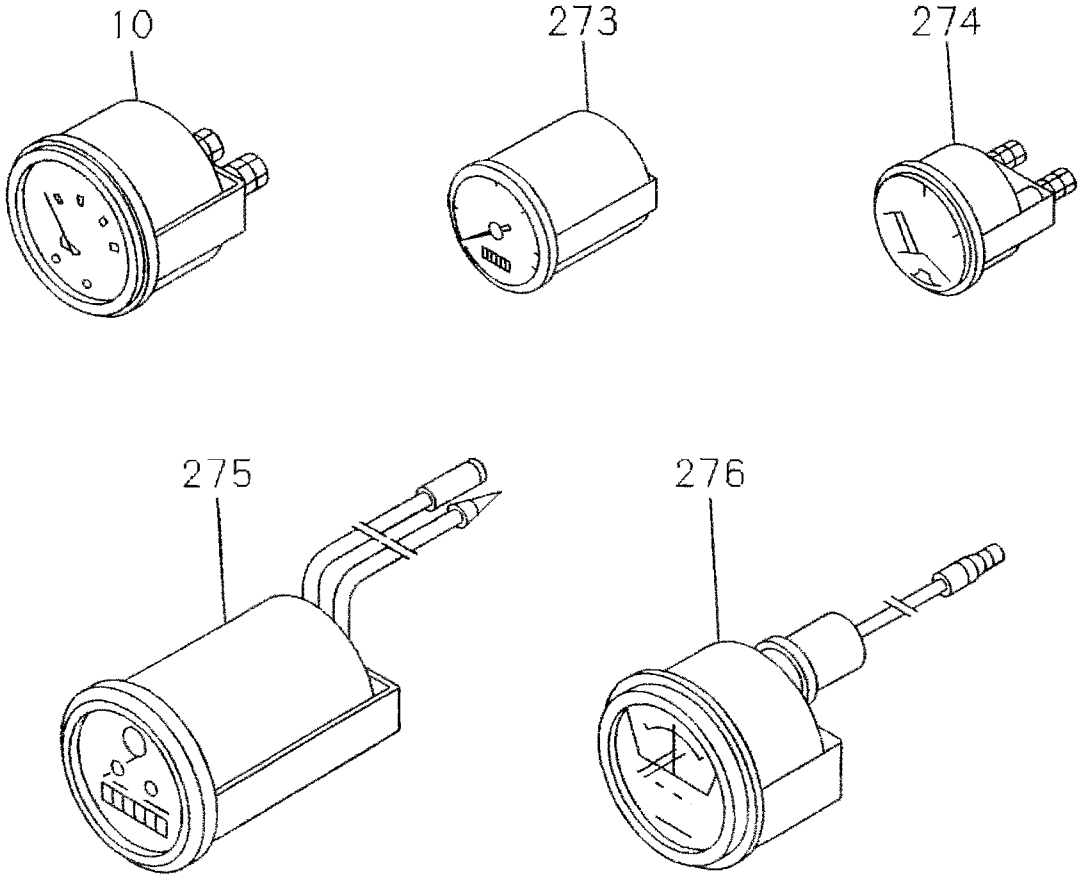

821A0150796

METER ASM

8-21 A
FIG-NO.

KEY. NO | PART NAME

4JB1

KEY NO	PART NUMBER	ITC	APPLIED DATE	LR	QTY	ABCDE PPPPP AAAAA 0000 1234	FGHIJ PPPPP AAAAA 00001 56892	KLMNO PPPPP AAAAA 11111 33456 U G	PQRST PPPPP AAAAA 11122 78901	UVWXY PPPP ABBB 2 00 2 23	ZABCD PPPPP DDFHK 0 1	EFGHI PPPPP KKKKK 0000L 1234	JKLMN PPPPP KLLLL L U00 0 G11 1 U G	OPQRS PPPPP LLNNN 00 00 22 11 U U F G	TUVWX	Remarks
10	METER; THERMO															
	983150-2040		9503-		1	E			P		A		MN			
	897045-2121		9503-		1						A					
	894426-4440		9503-		1									QRS		
273	METER ASM; TACHO															
	894427-4541		9503-		1	E		KL					MN			
	894425-7491		9503-		1		F H		P	U						
	897025-8920		9503-		1						A					
	894447-8211		9503-		1									QRS		
274	METER; OIL PRESSURE															
	983140-1850		9503-		1	E			P		A		MN			

8-21 B METER ASM

FIG-NO.

KEY. NO	PART NAME / PART NUMBER	ITC	APPLIED DATE	LR	QTY	4JB1	A-4JB1	Remarks
						PPPPPPPPPPPPPPPP PPTTTT YYYYYVVVWWWWWWWW TTPPPP 0000 00 0000000 0GBKKX 1234 12 2346789 0 0 1 1 ABCDEFGHIJKLMNOPQRSTUVWXY	PPPPPPPPPPPPPPPPPPPPP AAAAAAAAAAAAAAAAAYYYY AAAAAAAAAAAAAAAAWAAAA 000000000111110 0000 123456789012345 1 123 ZABCDEFGHIJKLMNOPQRSTUVWX	
10	METER: THERMO							
	983150-2040		9503-		1	GH		
273	METER ASM: TACHO							
	583120-1402		9409-9409		1	G		
	894425-7491		9503-		1		C E K O	
	894427-4542		9503-		1		GH	
274	METER: OIL PRESSURE							
	983140-1870		9503-		1	G		
	983140-1850		9503-		1		G	
275	HOURMETER							
	183190-0600		9503-		1	GH		
276	AMMETER							
	183130-0030		9503-		1	G		

MEMO

8-25	SWITCH AND RELAY; INSTRUMENT PANEL
FIG-NO.	

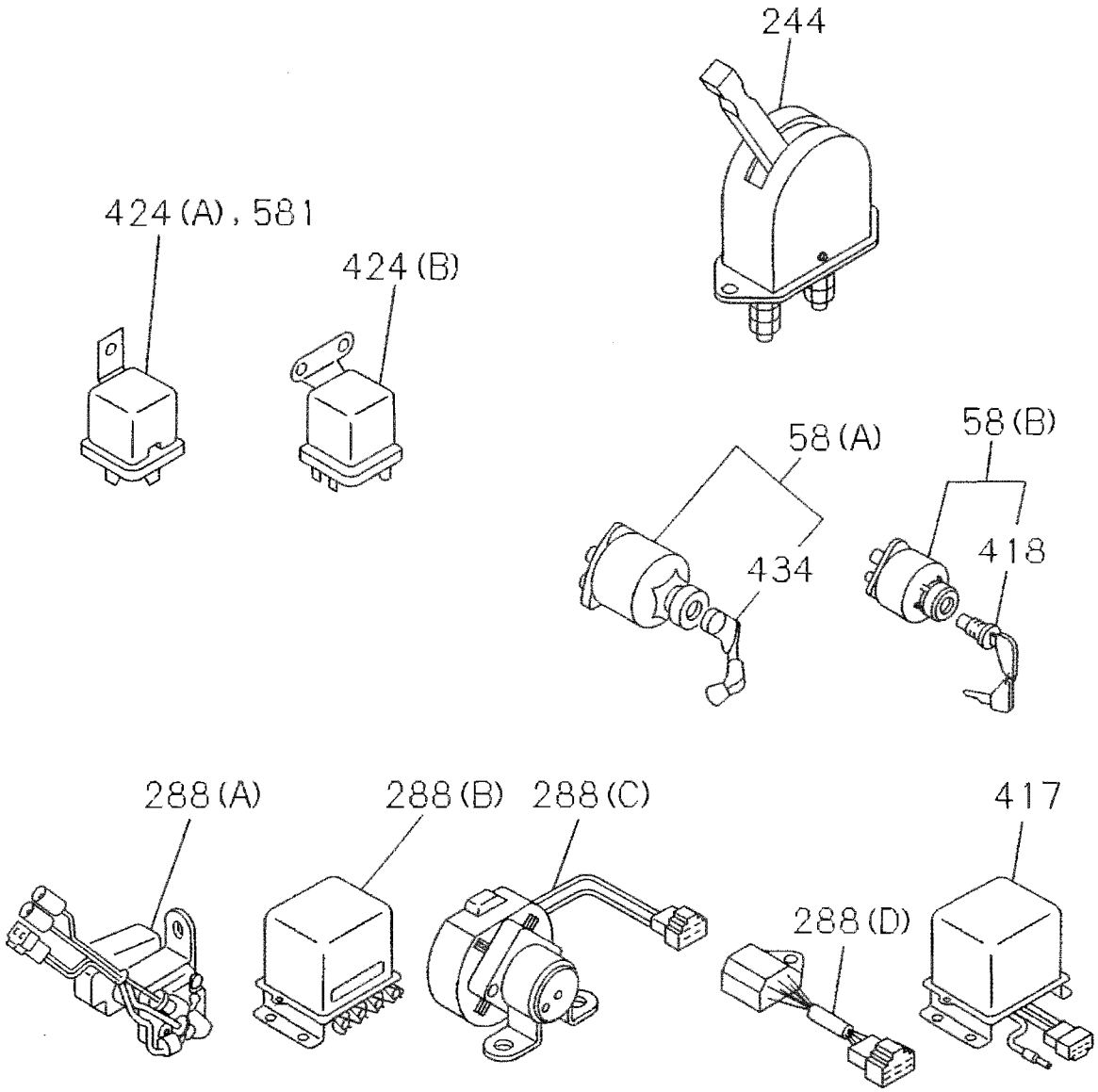

825A0150796

SWITCH AND RELAY; INSTRUMENT PANEL

8-25 A

FIG-NO.

KEY. NO	PART NAME	PART NUMBER	ITC	APPLIED DATE	LR	QTY	4JB1 PPPPPAAAAA 00000 12345	PPPPPAAAAA 00001 56892	PPPPPAAAAA 11111 33456 U G	PPPPPAAAAA 11122 78901	PPPPAABBB 2 00 2 23	PPPPPDDFHK 0 1	PPPPPKKKKK 0000LL 1234	PPPPPKLLLL L U00 0 G11 1 U G	PPPPPLLNNN 00 00 22 11 U U F G	Remarks
							ABCDE	FGHIJ	KLMNO	PQRST	UVWXY	ZABCD	EFGHI	JKLMN	OPQRS	TUVWX
58	SWITCH; IGNITION															
(A)		182310-0060	A	9503-9610		1	E	F	KL	P R		Z			QRS	
(A)		894402-5000		9611-		1	E	F	KL	P R		Z	H		QRS	
(A)		982710-2270	A	9503-9610		1					U			KL	OP	
(A)		894402-5000		9611-		1					U			KL	OP	
(B)		982710-0500		9503-		1		I								
288	RELAY; SAFETY															
(A)		897040-4160	C	9503-9503		1	AB	F J	NO	S				KL		
(A)		182553-0400		9504-		1	AB	F J	NO	S	U			KL		
(A)		182553-0213	C	9503-9503		1									MN	
(A)		182553-0390		9504-		1									MN	
(B)		894450-1740		9503-		1	CDE	I	KL	R		A				
(C)		894361-9490		9503-		1			M	T		BC				
(B)		897040-4160		9406-9406		1		G								
(D)		897068-7781		9407-		1		G								
(B)		894450-1740		9503-9602		1				P						
(A)		182553-0400		9606-		1				P						
417	RELAY; EMERGENCY															
		182550-0732		9503-		1				R						
418	BARREL ASM; LK															
		982750-2840		9503-		1		I								
424	RELAY															
(A)		894258-0140		9503-		1						ZA				
(B)		582550-0290		9407-		1		G								
(B)		582550-0290		9503-		1					V				QRS	
434	KEY; STARTER SW															
		182316-0070	A	9503-9610		1	E	F	KL	P R	U	Z		KL	OPQRS	
		894402-4980		9611-		1	E	F	KL	P R	U	Z	H	KL	OPQRS	
581	RELAY; GLOW INDICATOR															
		582550-0290		9503-		2				Q						

8-25 B SWITCH AND RELAY; INSTRUMENT PANEL

FIG-NO.

KEY. NO	PART NAME / PART NUMBER	I T C	APPLIED DATE	L R	QTY	4JB1					A-4JB1					Remarks
						PPPPP YYYYY 0000 1234	PPPPP VVVWW 00 0 12 2	PPPPP WWWWW 00000 34678	P PPT W TTP 0 00B 9 0 1	TTT PPP KKX 0 1	PPPPP AAAAA AAAAA 0000 1234	PPPPP AAAAA AAAAA 00000 56789	PPPPP AAAAA AAAAA 11111 01234	PPPPP AAYYY AWAAA 10 00 51 12	P Y A 0 3	
						ABCDE	FGHIJ	KLMNO	PQRST	UVWXY	ZABCD	EFGHI	JKLMN	OPQRS	TUVWX	
58	SWITCH: IGNITION															
(A)	182310-0060	A	9503-9610		1		J	MNO								
(A)	894402-5000		9611-		1		H J	MNO		V		E GH		P		
(B)	982710-0460		9503-		1		F I	KL O								
(B)	982710-0500		9503-		1					W						
244	SWITCH: BATTERY															
	182320-0010		9503-		1		GH									
288	RELAY: SAFETY															
(A)	897040-4160	C	9503-9503		1		J	LM O								
(A)	182553-0400		9504-		1		H J	LM O				F	N	O		
(A)	897068-7781		9503-		1						A	E	M			
(A)	182553-0390		9503-		1						B D	H	L		T	
(A)	897115-2341		9503-		1							G I				
(C)	894361-9490		9503-		1	ABCDE								QRS		
417	RELAY: EMERGENCY															
(C)	582550-0422		9805-		1		H							QRS		
418	BARREL ASM; LK															
	182317-0020		9503-		1		F I	KL O								
	982750-2840		9503-		1					W						
424	RELAY															
(B)	582550-0290		9503-		1		GH				A	E	M			
434	KEY: STARTER SW															
	182316-0070		9503-9610		1		J	MNO								
	894402-4980		9611-		1		J	MNO				E G				

MEMO

8-26	ELECTRICAL CONTROL AND OTHER PARTS
FIG-NO.	

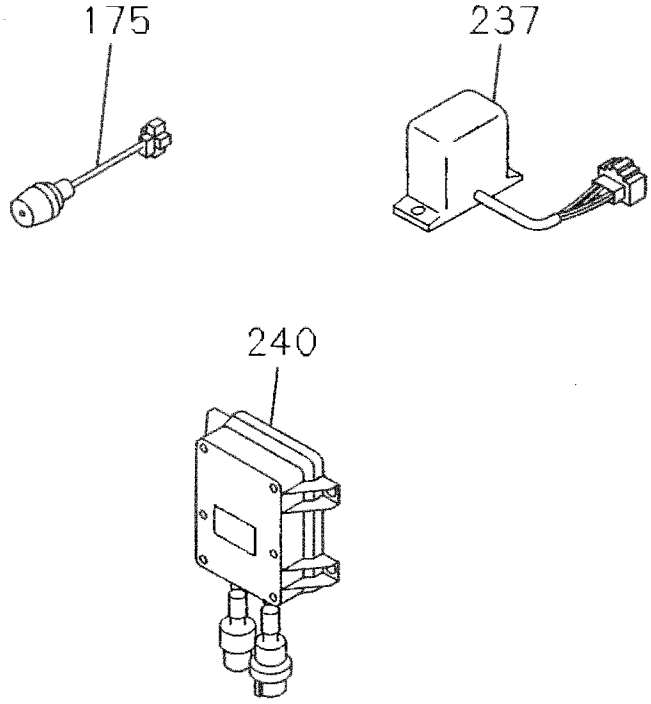

826A0150796

ELECTRICAL CONTROL AND OTHER PARTS

FIG-NO. 8-26 A

4JB1

KEY. NO	PART NAME / PART NUMBER	ITC	APPLIED DATE	LR	QTY	PA, PA01, PA02, PA03, PA04 (A B C D E)	PA05, PA06, PA08, PA09, PA12 (F G H I J)	PA13, PA13UG, PA14, PA15, PA16 (K L M N O)	PA17, PA18, PA19, PA20, PA21 (P Q R S T)	PA22, PB, PB02, PB03 (U V W X Y)	PD, PD01, PF, PH, PK (Z A B C D)	PK01, PK02, PK03, PK04, PKL (E F G H I)	PKL01, PL, PLUG, PL01, PL01UG (J K L M N)	PL02, PL02UF, PN, PN01, PN01UG (O P Q R S)	(T U V W X)	Remarks
175	INDICATOR; GLOW PLUG															
	582250-0082		9503-		1		F						K L	Q R S		
237	TIMER ASM															
	181910-0240		9503-		1								M N			
240	CONTROL ASM; ENG															
	894366-5241		9503-		1						Z					

8-26 B ELECTRICAL CONTROL AND OTHER PARTS

FIG-NO.

KEY. NO	PART NAME						4JB1					A-4JB1					Remarks
	PART NUMBER	ITC	APPLIED DATE	LR	QTY		PPPPP YYYYY 0000 1234	PPPPP VVVWW 00 12	PPPPP WWWWW 000000 234678	P 0 9	PPT TTP QQB 0 1	TTT PPP KKX 0 1	PPPPP AAAAA 00000 12345	PPPPP AAAAA 00000 67890	PPPPP AAAAA 11111 01234	PPPPP AAYYY AWAAA 10 00 51 12	P Y A 0 3
							ABCDE	FGHIJ	KLMNO	PQRST	UVWXY	ZABCD	EFGHI	JKLMN	OPQRS	TUVWX	
184	LAMP ASM; PILOT, RED																
	982650-0531		9503-		2			H					E				

MEMO

8-50	AIR CONDITIONING SYSTEM; FRONT
FIG-NO.	

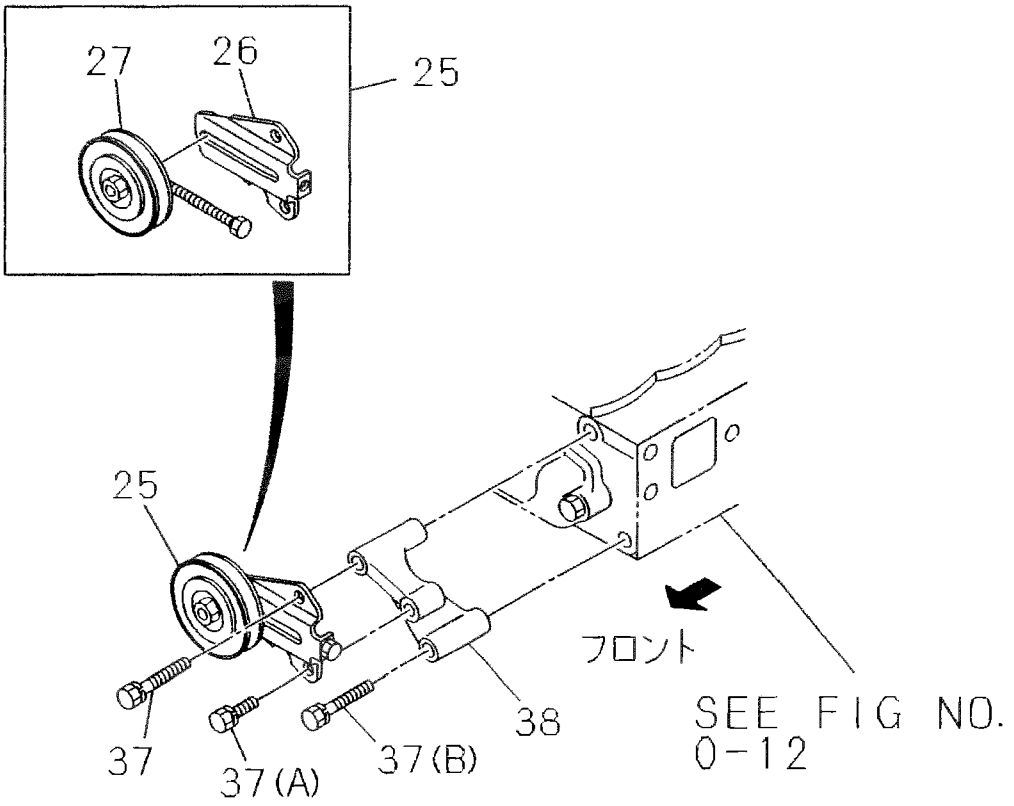

850A0150796

AIR CONDITIONING SYSTEM; FRONT

8-50 B

FIG-NO.

KEY. NO	PART NAME / PART NUMBER	I T C	APPLIED DATE	L R	QTY	A-4JB1 (F)	Remarks
25	PULLEY ASM; IDLER, COMPRESSOR						
	897080-9480		9503-		1	F	1-GROOVE
26	BRACKET; IDLE PULLEY, A/C						
	894120-9982		9503-		1	F	
27	PULLEY; IDLE, A/C						
	913363-6060		9503-		1	F	1-GROOVE
37	BOLT; PULLEY BRKT						
(A)	028081-0800		9503-		1	F	M10X80 FLANGE
(B)	028681-0300		9503-		1	F	M10X30
(C)	028080-8600		9503-		1	F	M8X60 FLANGE
38	BRACKET; PULLEY TO CYL HD						
	897107-8680		9503-		1	F	

4JB1 PARTS CATALOG

不 許
複 製
All rights
reserved.

PARTS CATALOG NO. 5-8871-0796-0

いすゞ自動車株式会社
ISUZU MOTORS LTD.

本　　社　　〒140-8722　東京都品川区南大井 6－26－1
TEL　03－5471－1111

Head Office　6-26-1, Minami-oi, Shinagawaku, Tokyo 140-8722, Japan
Cable Address: ISUZU TOKYO
Phone Tokyo　(03) 5471-1111

編 集 者　　〒140-8722　東京都品川区南大井6－26－1
大森ベルポートA館
国内サービス・部品事業室　業務管理部　部品技術グループ
TEL　03－5471－1384（ダイヤル イン）
ファクシミリ　03－5471－1327

Compiler　6-26-1, Minami-oi, Shinagawaku, Tokyo 140-8722, Japan
Parts Technical Group
Service & Parts Operations Control Dept.
Domestic Service & Parts
PHONE　03-5471-1384 (DIAL IN)
FAX.　03-5471-1327

発行年月
Issued Date　SEP. 1998

ISUZU

ISUZU MOTORS LIMITED